US 20190142413A1

(19) United States

(12) Patent Application Publication

(10) Pub. No.: US 2019/0142413 A1

(43) Pub. Date: May 16, 2019

Fairneny

(54) FLEXIBLE SUTURING INSTRUMENT

(71) Applicant: **Boston Scientific Scimed, Inc.**, Maple Grove, MN (US)

(72) Inventor: **Ty Fairneny**, Hopkinton, MA (US)

(21) Appl. No.: **16/249,338**

(22) Filed: **Jan. 16, 2019**

Related U.S. Application Data

(63) Continuation of application No. 13/401,148, filed on Feb. 21, 2012.

(60) Provisional application No. 61/451,366, filed on Mar. 10, 2011.

Publication Classification

(51) **Int. Cl.**
A61B 17/04 (2006.01)

(52) **U.S. Cl.**
CPC ***A61B 17/0469*** (2013.01); *A61B 17/0625* (2013.01); ***A61B 17/0482*** (2013.01)

(57) **ABSTRACT**

A suturing instrument includes a handle, an elongate shaft, and a suturing head. One or more pull wires extend from the handle into the elongate shaft for controllably deflecting a deflectable portion of the elongate shaft in one or more directions and/or planes for improved maneuverability within the body of a patient during an endoscopic or laparoscopic surgical procedure and for changing the positioning of the suturing head.

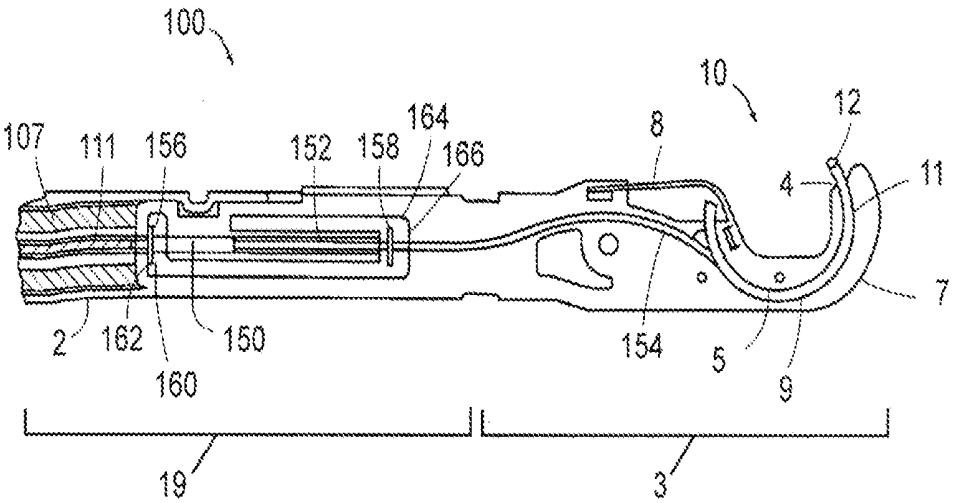

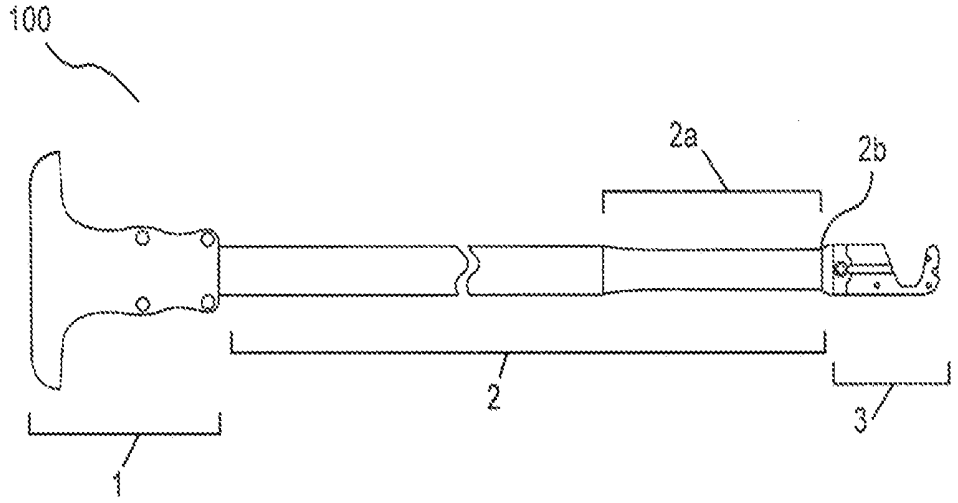

Figure 1A

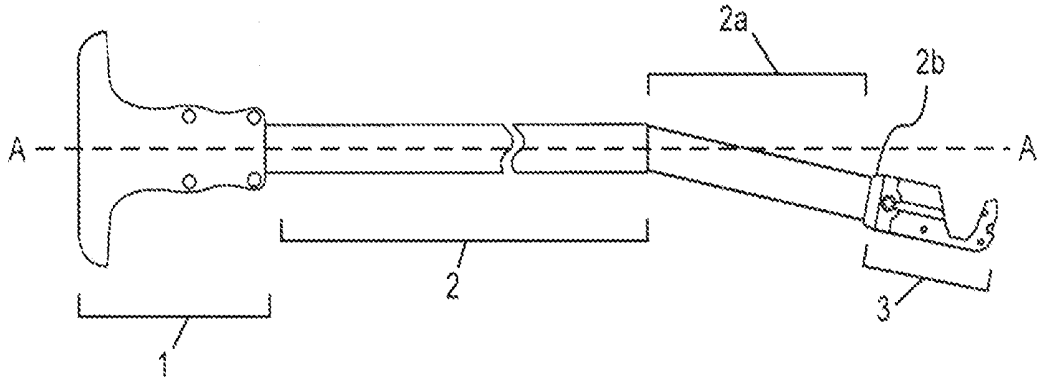

Figure 1B

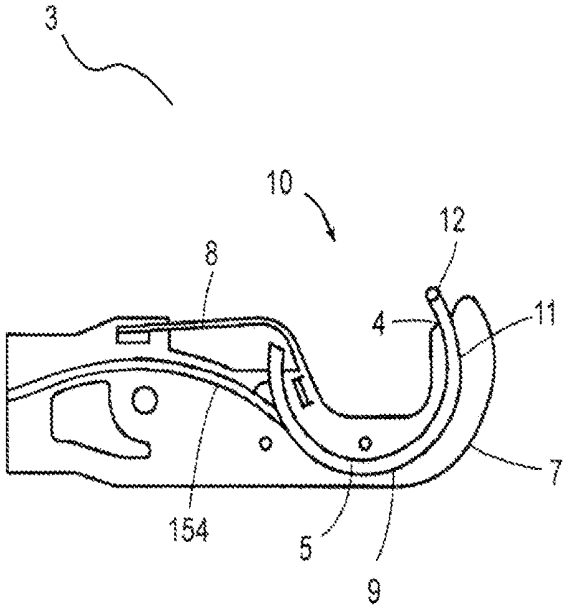

Figure 2

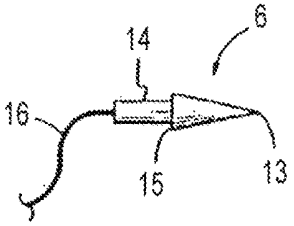

Figure 3

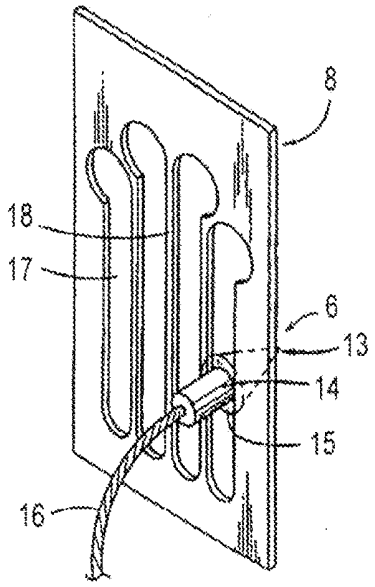

Figure 4

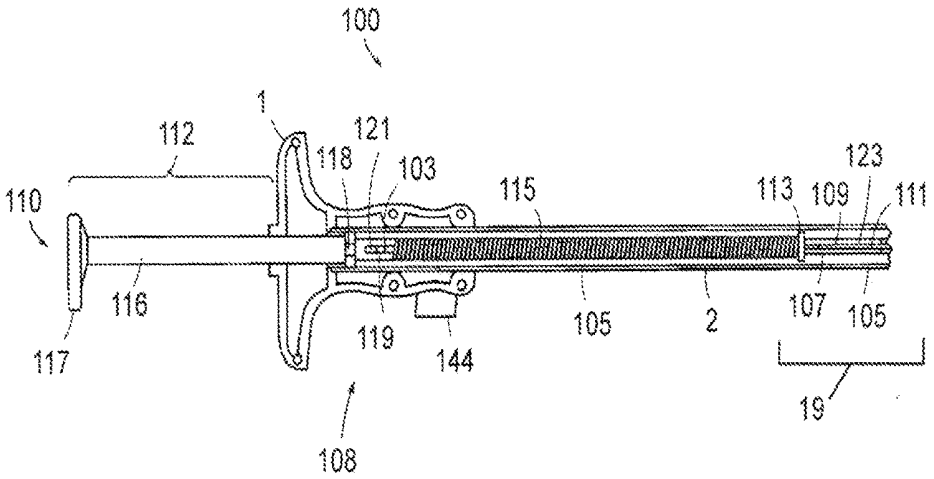

Figure 5

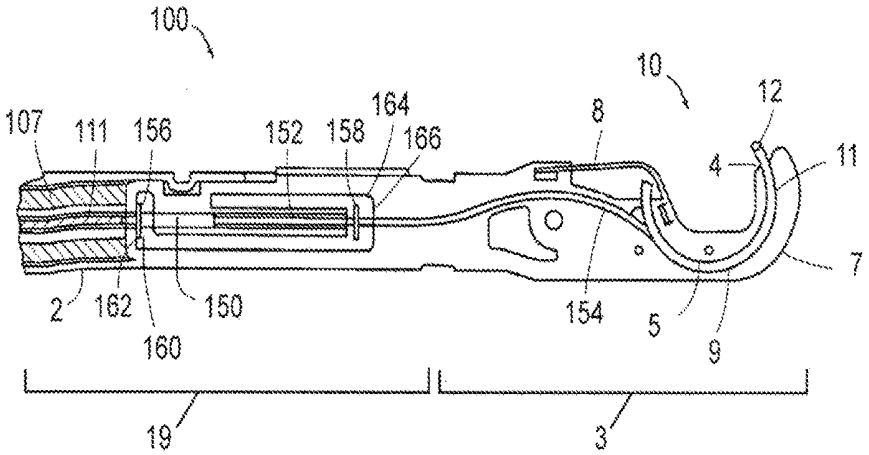

Figure 6

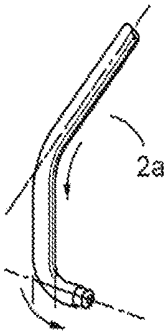

Figure 7C

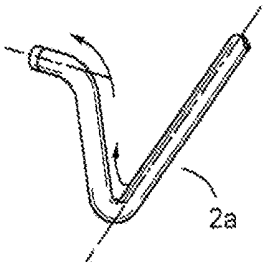

Figure 7D

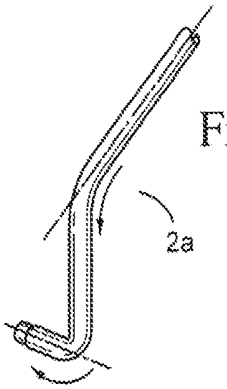

Figure 7E

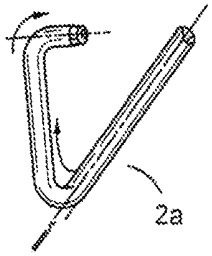

Figure 7F

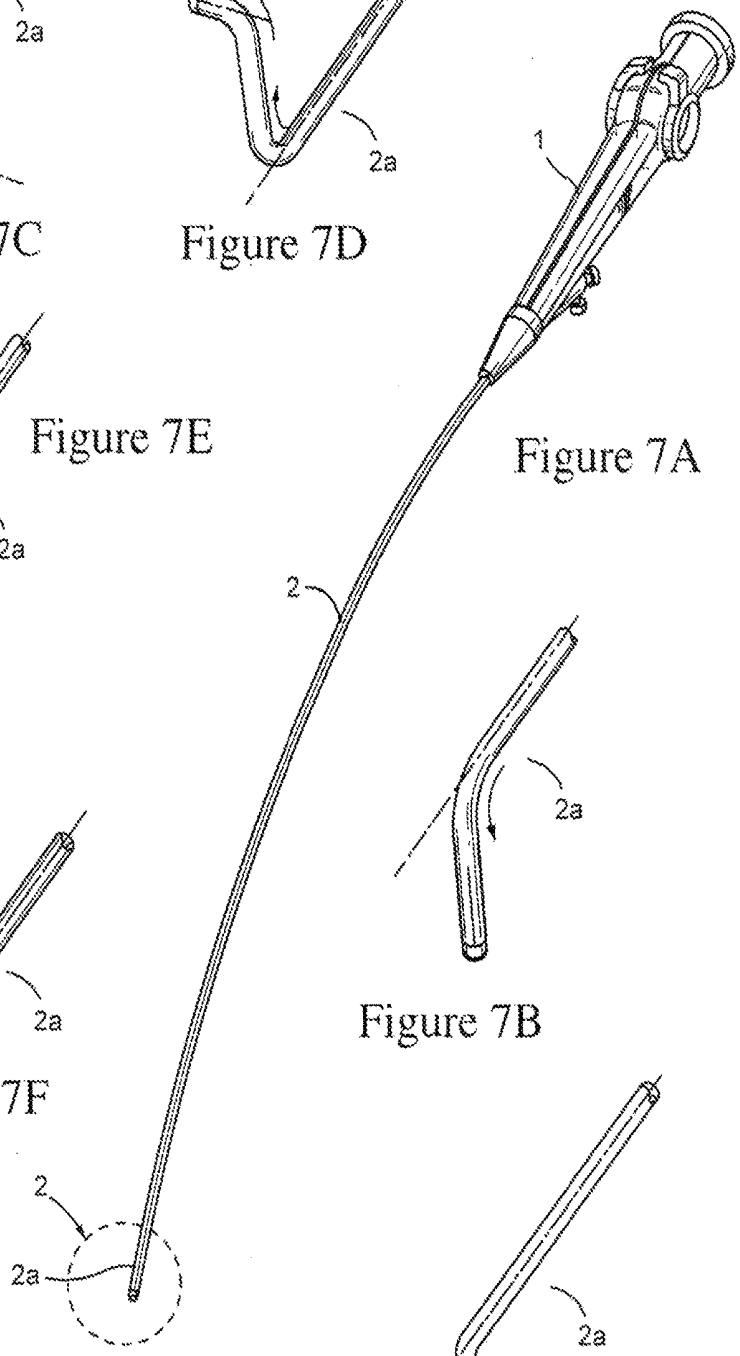

Figure 7A

Figure 7B

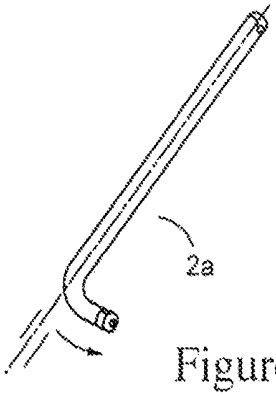

Figure 7G

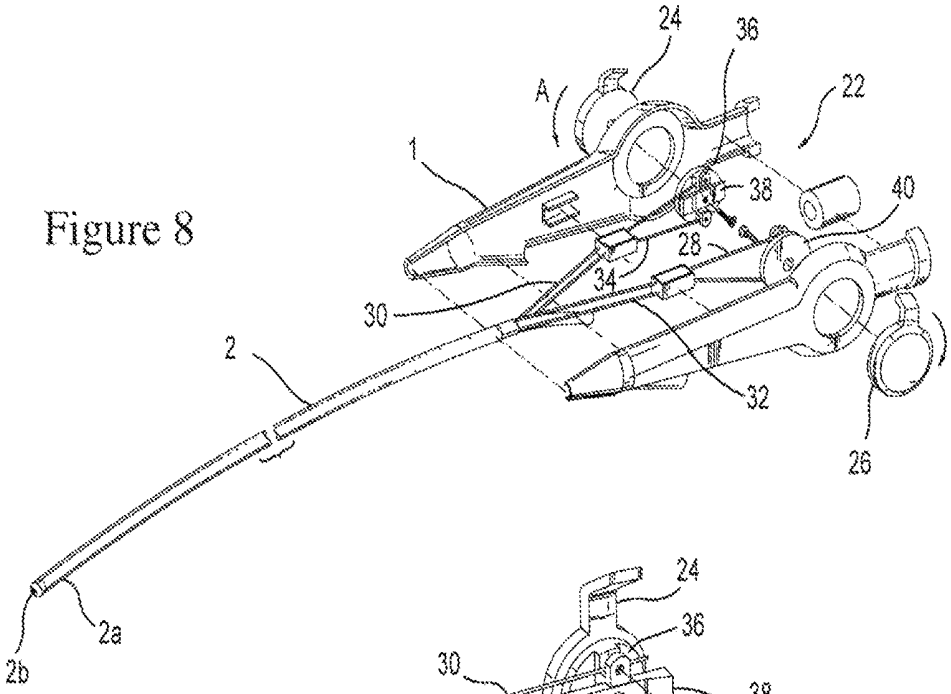

Figure 8

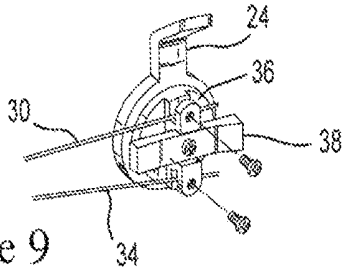

Figure 9

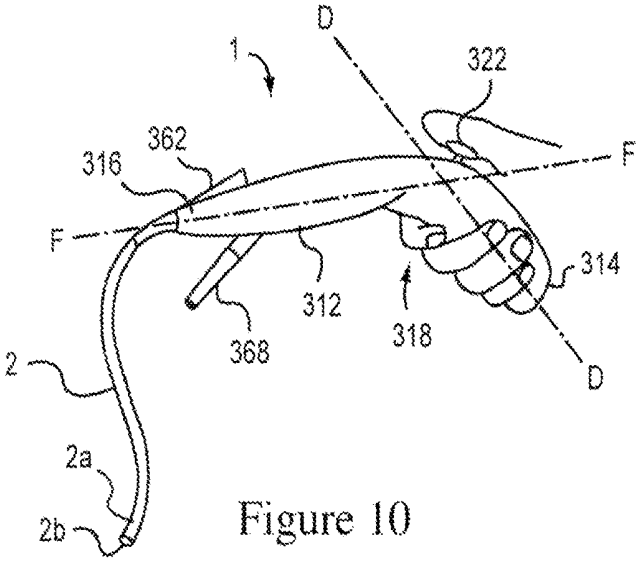

Figure 10

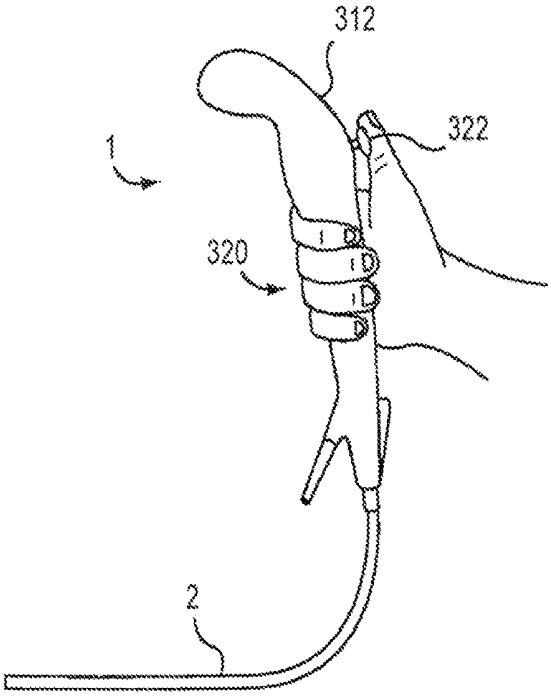

Figure 11

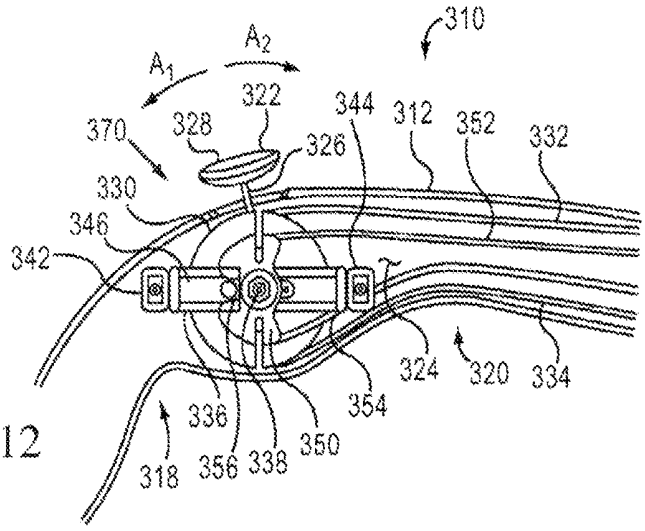

Figure 12

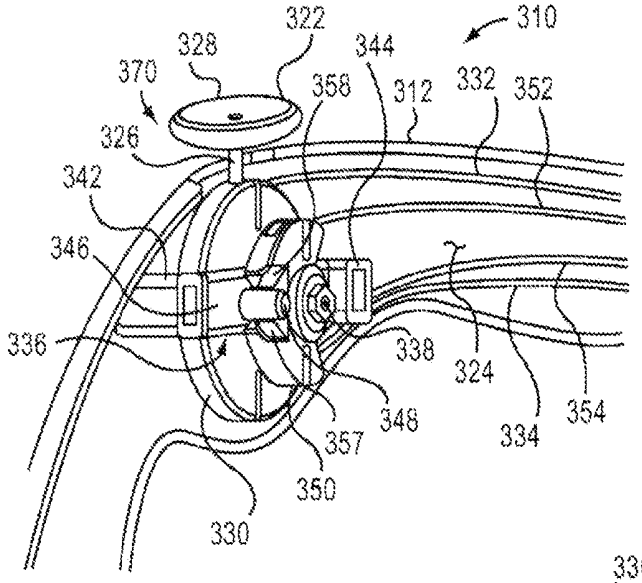

Figure 13A

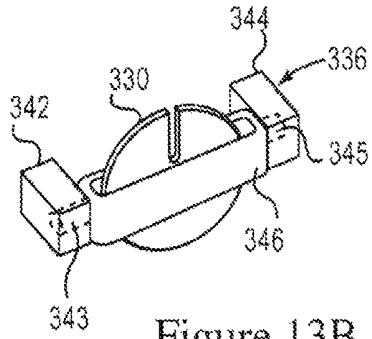

Figure 13B

Figure 14

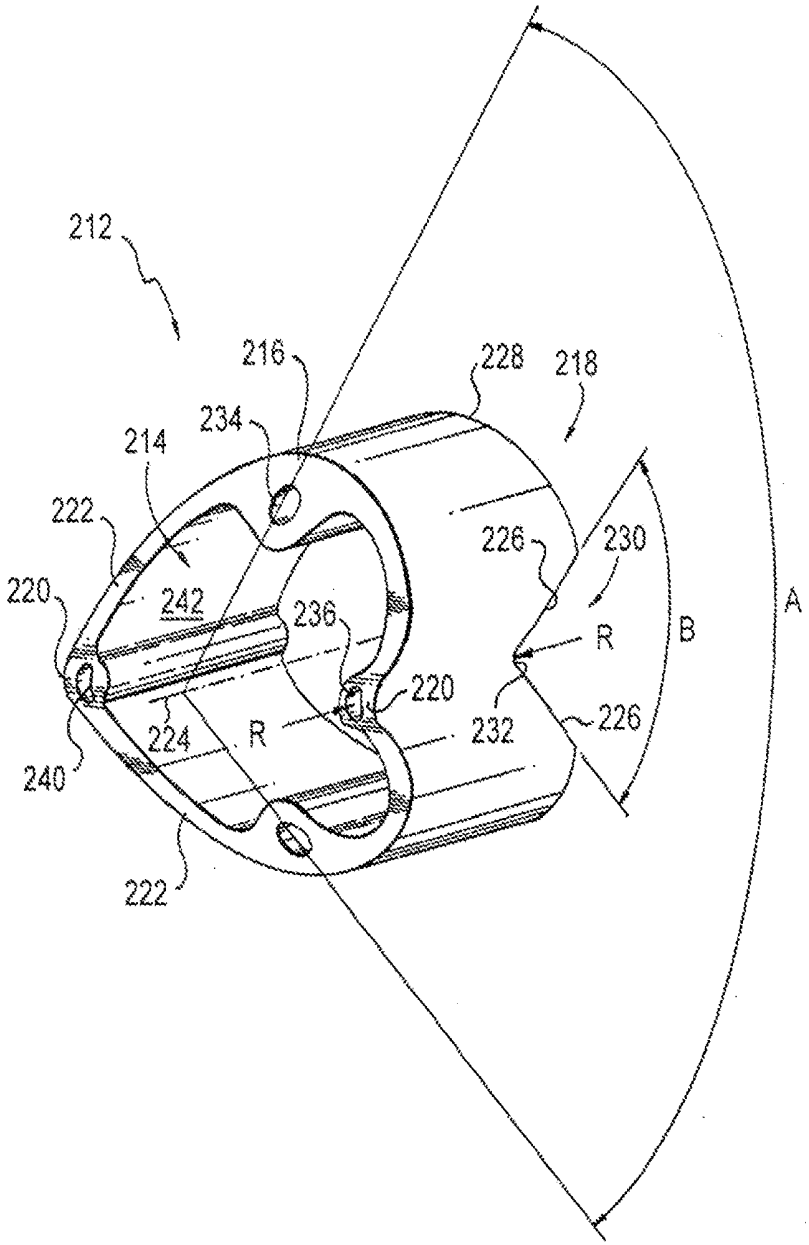
212
216
228
218
234
214
222
226
230
220
242
236
R
B
A
220
224
R
232
226
240
222

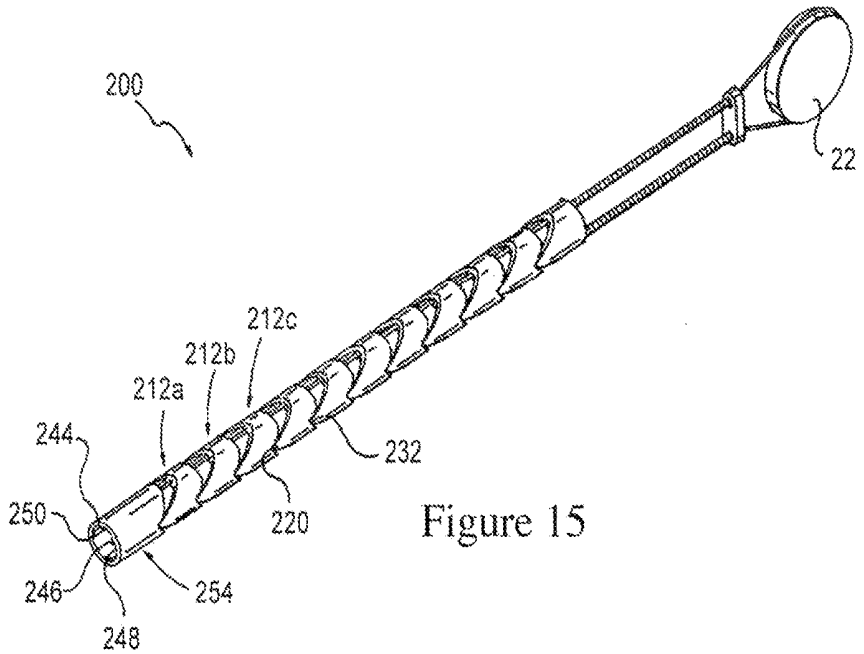

Figure 15

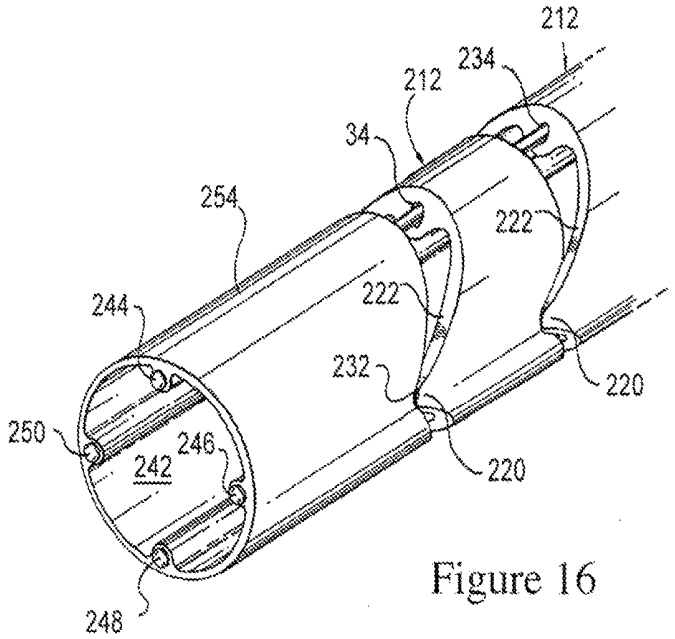

Figure 16

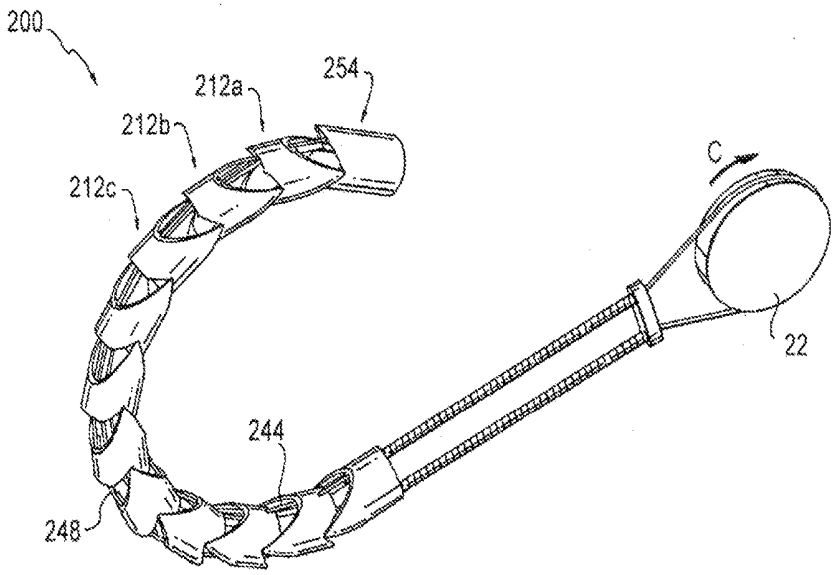

Figure 17

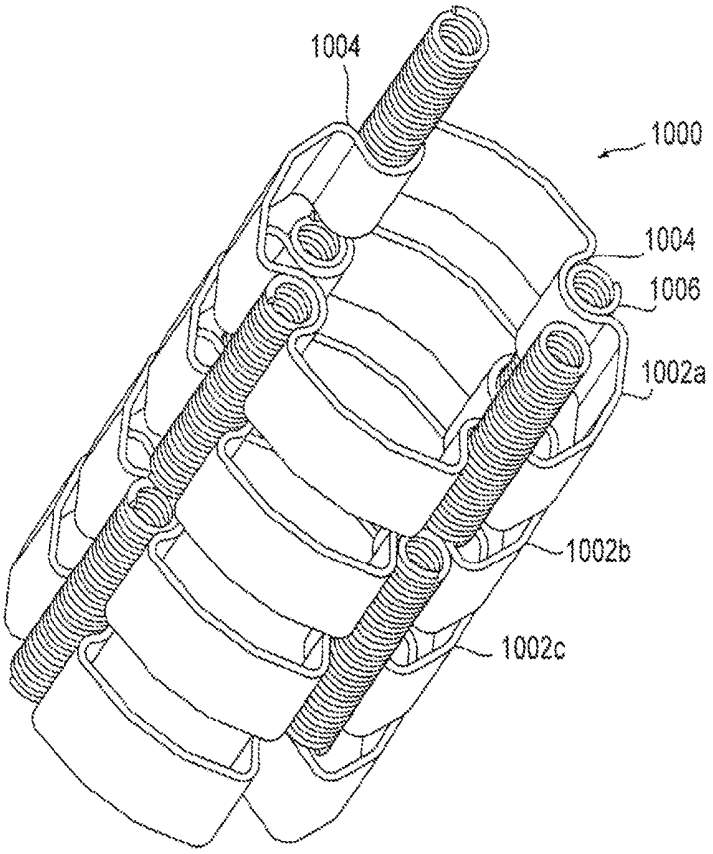

Figure 18A

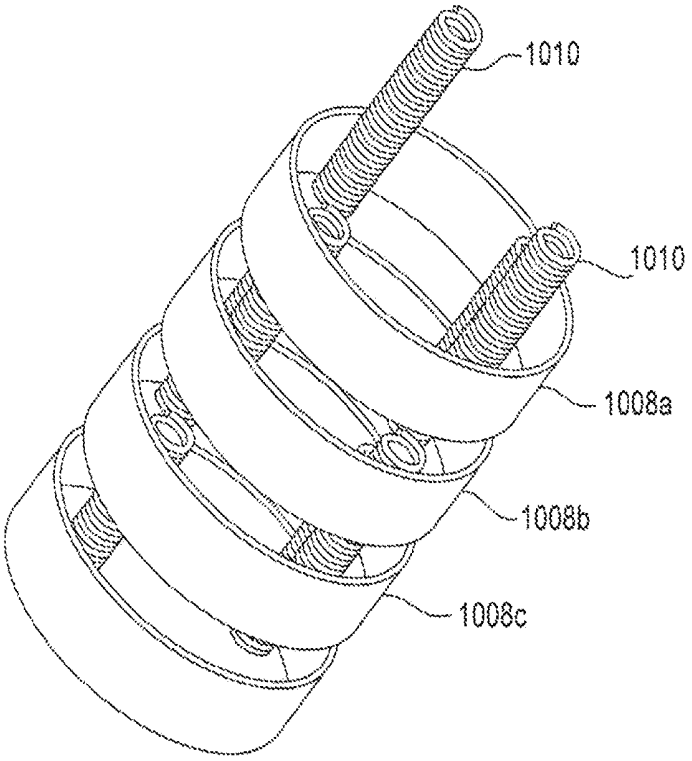

Figure 18B

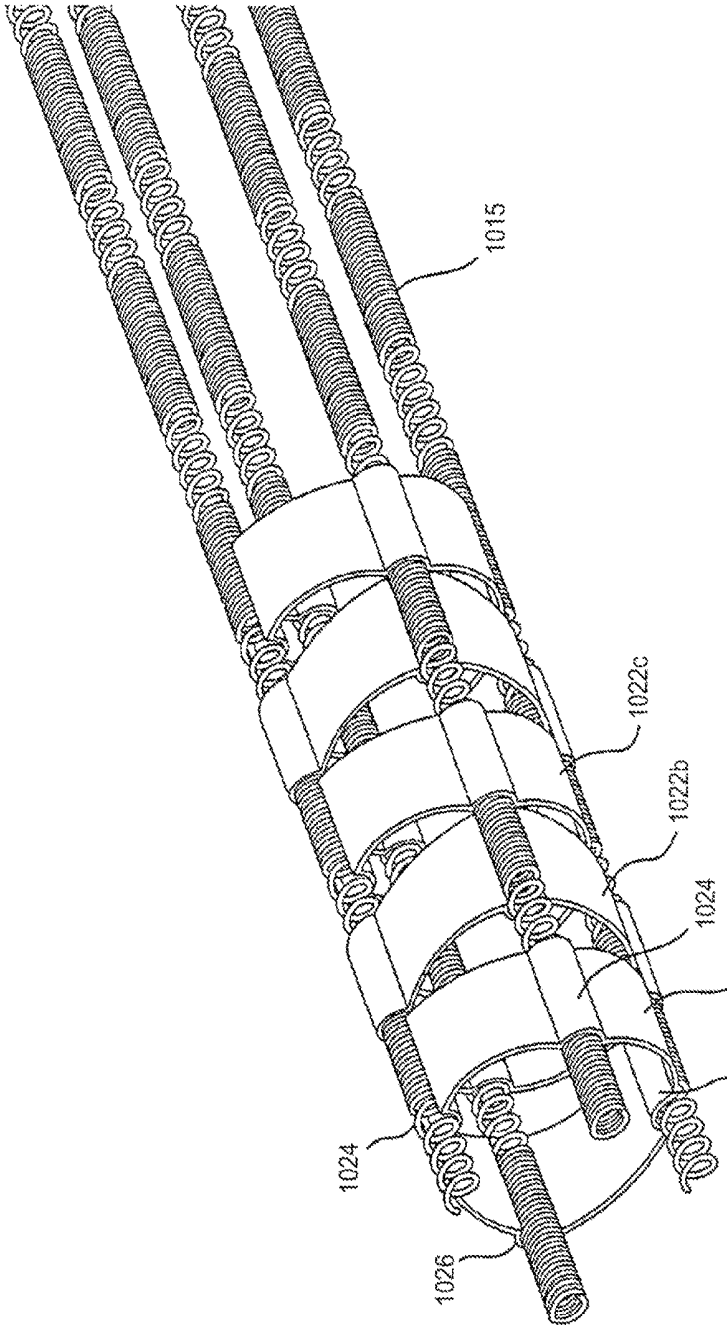

Figure 18C

FLEXIBLE SUTURING INSTRUMENT

CROSS-REFERENCE TO RELATED APPLICATIONS

[0001] This application is a continuation of, and claims priority to, U.S. patent application Ser. No. 13/401,148, filed on Feb. 21, 2012, entitled "FLEXIBLE SUTURING INSTRUMENT", which claims priority to U.S. Provisional Application No. 61/451,366, filed on Mar. 10, 2011, entitled "FLEXIBLE SUTURING INSTRUMENT", the contents of which are incorporated herein by reference in their entirety.

TECHNICAL FIELD

[0002] The invention generally relates to suturing instruments and methods for placing sutures. The suturing instruments of the invention can be used to access difficult-to-reach treatment areas within the body of a patient.

BACKGROUND INFORMATION

[0003] Suturing body tissue is a time consuming aspect of many surgical procedures. For many surgical procedures, it is necessary to make a large opening in the human body to expose the area that requires surgical repair. There are instruments available, such as endoscopes, that allow viewing of certain areas of the human body through a small puncture wound without exposing the entire body cavity. Endoscopes can be used in conjunction with specialized surgical instruments to detect, diagnose, and repair areas of the body that previously required open surgery to access.

[0004] Some surgical instruments used in endoscopic procedures are limited by the manner in which they access the areas of the human body in need of repair. In particular, the instruments may not be able to access tissue or organs located deep within the body or that are in some way obstructed. Also, many of the instruments are limited by the way they grasp tissue, apply a suture, or recapture a needle and suture. Furthermore, many of the instruments are complicated and expensive to produce due to the numerous parts and/or subassemblies required to make them function properly.

[0005] Suturing instruments, and more specifically suturing instruments used in endoscopic procedures, are generally rigid and do not provide the operator a range of motion to access difficult-to-reach parts of the anatomical region requiring sutures. Accordingly, multiple instruments of various configurations and sizes typically are used to access all of the necessary tissue areas. These limitations of known suturing instruments complicate the endoscopic procedure for the surgeon by requiring the insertion and removal of multiple instruments from a surgical site as the target suturing area changes during the course of the surgical procedure.

SUMMARY OF THE INVENTION

[0006] The invention generally relates to suturing instruments with improved maneuverability, efficiency and functionality for use during a surgical procedure, such as an endoscopic or laparoscopic procedure. More particularly, the invention is directed to a suturing instrument including a flexible elongate shaft that can be actively deflected. The deflection can be controlled by the user of the instrument (e.g., a surgeon) for improved maneuverability and functionality during a surgical procedure.

[0007] In one aspect, the invention relates to a suturing instrument. The suturing instrument includes a handle. An elongate shaft extends from the handle. At least a portion of the elongate shaft is flexible. One or more pull wires extend from the handle into the flexible portion of the elongate shaft for deflecting the flexible portion of the elongate shaft. The suturing instrument further includes a suturing head that extends from a distal end of the elongate shaft. The suturing head includes a needle carrier channel, a needle carrier having a lumen configured to releasably hold/receive the non-penetrating end of a needle, and a needle catch. The needle carrier is movably disposed within the needle carrier channel.

[0008] In certain embodiments, a proximal, a middle, and/or a distal portion of the elongate shaft is flexible. In other embodiments, the elongate shaft is flexible along the entire length of the shaft.

[0009] Generally, the needle carrier in the suturing head is movably disposed within the needle carrier channel such that it is capable of moving along the needle carrier channel out of the suturing head into an extended position, and back into the suturing head into a retracted position.

[0010] The suturing instruments of the invention can further include a needle deployment system at least partially disposed within the elongate shaft. The needle deployment system is coupled to the needle carrier and moves the needle carrier between the extended position and the retracted position. In certain embodiments, the needle deployment system is configured to move the needle carrier out of the suturing head in a semi-circular path towards the needle catch such that the needle held by the needle carrier is released from the needle carrier and retained in the needle catch.

[0011] The needle deployment system includes a proximal and a distal end. The distal end of the needle deployment system is coupled to the needle carrier, whereas the proximal end of the needle deployment system is coupled to an actuating mechanism for actuating the needle deployment system. The actuating mechanism is disposed within or on the handle portion of the suturing instrument.

[0012] The handle portion of the suturing instruments of the invention can further include a control system coupled to the one or more pull wires for controlling deflection of the flexible portion of the elongate shaft. The control system can include a rotatable cam coupled to the one or more pull wires. Alternatively, the control system can include one or more knobs, hubs or levers attached to the one or more pull wires.

[0013] Preferably, at least a portion of the elongate shaft the suturing instruments of the invention is capable of being deflected into multiple different planes relative to a longitudinal axis of the elongate shaft. For example, at least a distal portion of the elongate shaft is capable of being deflected into a plurality of different directions/planes relative to a longitudinal axis of the elongate shaft. Alternatively, the elongate shaft is capable of being simultaneously deflected into multiple different planes along the entire length of the shaft. Deflection of the elongate shaft is actively controlled by a user (e.g., a surgeon) using the one or more pull wires that extend from the handle into a distal portion of the elongate shaft.

[0014] In certain embodiments, at least a portion of the elongate shaft includes a flexible coil, such as a Bowden coil. For example, a proximal, a middle and/or a distal

portion of the elongate shaft can include a flexible coil. In an alternative embodiment, the flexible coil can extend along the entire length of the elongate shaft. The elongate shaft can further include an outer sleeve disposed on the outside of the flexible coil to provide the instrument with a smooth exterior surface. Deflection of the flexible coil portion of the elongate shaft can be actively controlled by a user (e.g., a surgeon) using the one or more pull wires that extend from the handle into a distal portion of the elongate shaft.

[0015] In alternative embodiments, at least a portion of the elongate shaft includes an articulation structure. Preferably, a flexible portion of the elongate shaft includes an articulation structure. For example, a proximal, a middle, and/or a distal portion of the elongate shaft can include an articulation structure. Alternatively, the articulation structure can extend along the entire length of the elongate shaft. Deflection of the articulated portion of the elongate shaft can be actively controlled by a user (e.g., a surgeon) using the one or more pull wires that extend from the handle into a distal portion of the elongate shaft.

[0016] In one embodiment, the articulation structure can include a series of stacked links disposed adjacent to one another and movable with respect to each other. Each link includes a front face tapered to a pair of pivot points and a rear face defining a wedge shaped recess for receiving the pivot points of the adjacent link. The one or more pull-wires are configured to provide tension to the articulation structure and hold the adjacent links together.

[0017] In another embodiment, the articulation structure includes a first articulation section, the first articulation section and a second articulation section. The first articulation section includes a first series of stacked links disposed adjacent to one another and movable with respect to each other, each link including a front face tapered to a pair of pivot points and a rear face defining a wedge shaped recess for receiving the pivot points of the adjacent link. The second articulation section includes a second series of stacked links disposed adjacent to one another and movable with respect to each other, each link including a front face tapered to a pair of pivot points and a rear face defining a wedge shaped recess for receiving the pivot points of the adjacent link, the wedge shaped recesses of the first articulation section radially offset from the wedge shaped recesses of the second articulation section. The one or more pull wires provide tension to the articulation structure and hold the adjacent links together.

[0018] In yet another embodiment, the articulation structure includes a number of ring links, each having an inner circumference and an outer circumference. Each ring link includes: two concave recesses with openings that face radially outward from the outer circumference of the ring link that are positioned on opposite sides of the outer circumference of the ring link; two concave recesses with openings that face radially inward from the inner circumference of the ring link that are positioned on opposite sides of the inner circumference of the ring link and are oriented at 90 degrees to the two concave recesses positioned on opposite sides of the outer circumference of the ring link; and a plurality of spring segments that are secured within the concave recesses on the outer circumferences and inner circumferences of the ring links to join adjacent ring links together and that are bendable in the articulating joint. The concave recesses on the outer circumference of a given ring link are aligned with the concave recesses on the inner circumference of an adjacent ring link in the articulating joint. The spring segments define apertures for receiving the one or more pull wires.

[0019] In a second aspect, the invention relates to a suturing instrument having a handle that includes a control system. An elongate shaft extends from the handle. The elongate shaft includes a distal portion. At least a portion of the elongate shaft is flexible. One or more pull wires extend from the handle into the distal portion of the elongate shaft and are coupled to the control system to a user (e.g., a surgeon) to actively control the flexible portion of the elongate shaft. In this second aspect, the suturing instrument further includes a suturing head that extends from a distal end of the distal portion of the elongate shaft. The suturing head includes a needle carrier channel, a need carrier that is configured to releasably receive/hold the non-penetrating tip of a needle, and a needle catch. The needle carrier is movably disposed within the needle carrier channel.

[0020] In a third aspect, the invention relates to a suturing instrument that includes a handle. An elongate shaft extends from the handle. The elongate shaft includes a distal portion. At least a portion of the elongate shaft is flexible. In this third aspect, at least a portion of the elongate shaft further includes an articulation structure. One or more pull wires extend from the handle into the distal portion of the elongate shaft. The one or more pull wires are used to control deflection of the articulated portion of the elongate shaft. In this third aspect, the suturing instrument further includes a suturing head that extends from a distal end of the distal portion of the elongate shaft. The suturing head includes a needle carrier channel, a need carrier that is configured to releasably receive/hold the non-penetrating tip of a needle, and a needle catch. The needle carrier is movably disposed within the needle carrier channel.

[0021] The embodiments described herein are illustrative only and not intended to be limiting. Instruments or other devices similar or equivalent to those described herein can be used in the practice or testing of the present invention.

BRIEF DESCRIPTION OF THE DRAWINGS

[0022] In the drawings, like structures are referred to by like numerals throughout the several views. Note that the illustrations in the figures are representative only, and are not drawn to scale, the emphasis having instead been generally placed upon illustrating the principles of the invention and the disclosed embodiments. In the following description, various embodiments of the present invention are described with reference to the following drawings.

[0023] FIG. **1**A depicts the general structure of a suturing instrument according to the invention; FIG. **1**B is a view of the suturing instrument depicted in FIG. **1**A that shows the elongate shaft and the suturing head deflected off of a longitudinal axis extending along the suturing instrument.

[0024] FIG. **2** illustrates a suturing head for use in a suturing instrument according to the invention.

[0025] FIG. **3** depicts an example of a needle for use in a suturing instrument of the invention.

[0026] FIG. **4** depicts an example of a needle catch for use in a suturing instrument according to the invention.

[0027] FIG. **5** depicts an example of a handle coupled to an elongate shaft of a suturing instrument according to the invention, and shows an example of an actuating mechanism

that is disposed within the handle and coupled to a needle deployment system that is partially disposed within the elongate shaft.

[0028] FIG. **6** is a cross-sectional view of a distal portion of a suturing instrument according to the invention depicting a needle deployment system coupled to a needle carrier disposed within a suturing head.

[0029] FIGS. **7**A-**7**G depicts a suturing instrument having a flexible distal portion, and the multiple different directions and/or planes in which the distal portion can be bent or deflected.

[0030] FIG. **8** is an exploded view a handle of a suturing instrument according to the invention, depicting the components of a control system disposed within the handle.

[0031] FIG. **9** is an expanded view of a portion of the control system depicted in FIG. **8**.

[0032] FIG. **10** depicts an alternative embodiment of a handle including a control system for use in a suturing instrument according to the invention.

[0033] FIG. **11** depicts an alternate orientation of the handle depicted in FIG. **10**.

[0034] FIG. **12** is a cross-sectional view of the handle depicted in FIG. **10**, illustrating the components of a control system disposed within the handle.

[0035] FIG. **13**A is an alternate view of the handle depicted in FIG. **12**; FIG. **13**B is an expanded view of a portion of FIG. **12**.

[0036] FIG. **14** depicts a link used to form an articulation structure in accordance with an embodiment of the present invention.

[0037] FIG. **15** depicts a schematic rendering of an articulation structure formed by stacking a series of the links shown in FIG. **14**.

[0038] FIG. **16** depicts an enlarged portion of the articulation structure shown in FIG. **15**.

[0039] FIG. **17** depicts a schematic rendering of the articulation structure shown in FIG. **15** bent in an upward direction.

[0040] FIGS. **18**A-**18**C illustrate alternative embodiments of an articulation structure formed of a number of stacked discs in accordance with another embodiment of the present invention.

DESCRIPTION

[0041] Embodiments of the invention are described below. It is, however, expressly noted that the invention is not limited to these embodiments, but rather the intention is that variations, modifications and equivalents that are apparent to a person skilled in the art are also included.

[0042] Suturing instruments having a shapeable elongate shaft, an elongate shaft with a pre- formed bend and/or a passively deflectable suturing head, have been described in U.S. Patent Application Publication Nos. 2004/0181243, 2006/0041263, and 2008/0109015. The present invention provides suturing instruments having flexible elongate shafts that can be controllably deflected by a user (e.g., a surgeon) in a plurality of directions and/or planes, with improved precision and maneuverability over previous designs. The suturing instruments provide a minimally invasive tool that is useful in endoscopic or laparoscopic procedures, particularly in intra-abdominal, intra-vaginal, and rectal and procedures, which typically involve difficult-to-reach areas within a body.

[0043] A flexible suturing instrument according to the invention is used, for example, to access areas within a human body to ligate, fixate, or approximate tissue. The suturing instrument generally throws one or more stitches intracorporeally. FIG. **1**A depicts the general structure of a suturing instrument **100** according to an illustrative embodiment of the invention. As shown in FIG. **1**A, suturing instrument **100** generally includes a handle **1**, an elongate shaft **2** extending from the handle **1** and including a distal portion **2***a*, and a suturing head **3** extending from a distal end **2***b* of the distal portion **2***a* the elongate shaft **2**. At least a portion of the elongate shaft is adapted to be flexible such that it can be deflected in one or more directions and/or planes relative to a longitudinal axis extending along the elongate shaft. For example, the distal portion **2***a* of the elongate shaft **2** is adapted to be flexible such that it can be deflected off of a longitudinal axis A extending along the suturing instrument (FIG. **1**B). Alternatively, the entire length of the elongate shaft **2** is adapted to be flexible such that portions of the shaft can be deflected in one or more directions and/or planes relative to the longitudinal axis A extending along the suturing instrument.

[0044] One or more cables or pull wires extend from the handle **1** into the distal portion **2***a* of the elongate shaft **2** and are configured for actively controlling deflection of the flexible portion of elongate shaft **2** relative to a longitudinal axis extending along the length of the elongate shaft **2**. The one or more cables or pull wires can extend from the handle **1**, within the elongate shaft **2**, and into the distal portion **2***a*. Alternatively, the one or more cables or pull wires can extend from handle, along the outside of elongate shaft **2**, and into the distal portion **2***a*. In certain embodiments, the one or more pull wires terminate in the distal portion of the shaft, but the wires can terminate elsewhere such as in the suturing head **3**.

[0045] In certain embodiments, at least a portion of elongate shaft **2** includes a flexible coil, such as a Bowden coil. For example, the distal portion **2***a* of the elongate shaft can include a flexible coil. Alternatively, the entire length of the elongate shaft **2** can include a flexible coil. The flexible coil can be passively and/or actively bent into one or more shapes. For example, the flexible coil can passively conform to the shape of a bodily passage during insertion into the passageway. The flexible coil instead can be actively bent into a shape by a user's hand(s) prior to insertion into a bodily passage or cavity, such that the shaft **2** retains that shape during use. The flexible coil will be stiffer in embodiments where physical manipulation of the coiled portion of the shaft **2** result in that portion of the shaft **2** retaining its modified shape (such as an "S" shape). The stiffer the flexible coil, the harder it is to bend, but the more it will resist changing from its bent shape. The one or more pull wires extending from the handle **1** into the distal portion **2***a* of the elongate shaft instead can be used to actively control deflection of the flexible coil portion of the shaft **2**.

[0046] In alternative embodiments, at least a portion of the elongate shaft **2** includes an articulation structure that forms an articulated portion of the shaft **2** and allows the articulated portion to be controllably deflected by the one or more pull wires extending from the handle **1**. For example, the distal portion **2***a* of the elongate shaft can be articulated and thus controllably deflected in one or more planes relative to the longitudinal axis of the elongate shaft **2** using the one or more pull wires extending from the handle **1** to the distal

portion **2***a* of the shaft **2**. Alternatively, the entire length of the elongate shaft **2** can include an articulation structure that enables the entire length of the elongate shaft **2** to be actively and controllably deflected in one or more planes relative to the longitudinal axis of the elongate shaft **2** using the one or more pull wires. Examples of articulation structures suitable for use with the suturing instruments of the invention are described in detail below.

[0047] A flexible outer sleeve can be placed over the flexible coil portion and/or the articulated portion of the elongate shaft to provide a smooth exterior surface. The outer sleeve can be made from soft, thin polyurethane, LLDPE, silicon, pellethane, polyurethane, or other approved biocompatible materials such as polyethylene, polypropylene or polyvinyl alcohol. Additionally, the outer sleeve can be coated with a hydrophilic, lubricious coating such as HYDROPASS™ hydrophilic coating available from Boston Scientific Corporation, of Natick, Mass., and described in U.S. Pat. Nos. 5,702,754 and 6,048,620, which are herein incorporated by reference in their entireties. Additionally, the outer sleeve can be coated with a drug agent to treat internal body tissues.

[0048] Turning now to the suturing head components of the suturing instruments of the invention, an exemplary embodiment of the suturing head **3** is depicted in FIG. **2**. As shown in FIG. **2**, suturing head **3** defines an opening or needle exit port **4** through which a needle carrier **5** advances a needle **6** that is releasably held within needle carrier **5**. Suturing head **3** includes a curved portion **7**, needle carrier **5**, and a needle catch **8**. The curved portion **7** defines a needle carrier channel **9**, which ends at needle exit port **4**. The curved portion **7** also defines an opening **10** for receiving tissue. Needle carrier **5** is movably disposed within needle carrier channel **9** in the curved portion **7** such that needle carrier **5** is capable of moving out of the suturing head into an extended position, and back into the suturing head into a retracted position. A distal portion **11** of the needle carrier **5** defines a lumen **12** dimensioned for holding/receiving the non- penetrating end of the needle **6**. Preferably, the needle carrier **5** is configured to move out of suturing head **3** in a semi-circular path towards needle catch **8**, such that needle **6** is released from needle carrier **5** and retained in needle catch **8**. However, it should be noted that the exact structure and operation of the suturing head **3** can vary based on the type of head used.

[0049] Referring now to FIG. **3**, the needle **6** includes a tissue penetrating tip **13** and a shaft **14** coupled to the tip **13**, thereby forming shoulder **15**. The shaft **14** is coupled to a suture **16**. The needle **6** is inserted into lumen **12** of needle carrier **5** and held by a slight friction fit. Referring now to FIG. **4**, needle catch **8** includes one or more openings **17** defined by successive ribs **18**. Needle catch **8** receives tip **13** of needle **6** (coupled to suture **16**) through opening **17**, the ribs **18** deflect slightly to allow needle **6** to pass through. After the formed shoulder **15** of needle **6** has passed ribs **18**, the ribs **18** spring back to their original position defining the openings **17** and needle **6** remains captured in needle catch **8**. It should be noted that the needle **6** and needle catch **8** shown are merely one possible type and other designs may be selected.

[0050] Suturing instrument **100** further includes a needle deployment system that is disposed in at least a portion of the elongate shaft **2** and coupled to needle carrier **5** for moving the needle carrier **5** between the extended and retracted positions. Various configurations and components of needle deployment systems suitable for use in the suturing instruments of the invention are described in U.S. Pat. No. 5,713,910 to Gordon et al., U.S. Pat. No. 5,578,044 to Gordon et al., U.S. Pat. No. 5,575,800 to Gordon, U.S. Pat. No. 5,540,704 to Gordon et al., U.S. Pat. No. 5,458,609 to Gordon et al., and U.S. Pat. No. 5,364,408 to Gordon, all of which are incorporated herein by reference in their entireties. In an exemplary embodiment, the needle deployment system extends longitudinally through the elongate member **2** to the suturing head **3** where a distal portion **19** of the needle deployment system is coupled to needle carrier **5** within the suturing head **3** (FIG. **6**).

[0051] The handle component **1** of suturing instrument **100** can include an actuating mechanism **110** that is disposed within the handle **1** and coupled to a proximal portion of the needle deployment system for actuating the needle deployment system. In the illustrative embodiment depicted in FIG. **5**, the actuating mechanism **110** includes an actuator button **117** and a shaft **116** (together **112**). The actuating mechanism **110** is coupled to a bearing **118**, a hole **121**, a button end **119**, and a wireform **103**. The bearing **118** rides along a surface **105** that is formed by the inside of the elongate shaft **2**. The wireform **103** is inserted into the hole **121**, coupling it to the actuator button **117**. A spring **115** encircles the wireform **103**, abuts the button end **119**, and is compressed between the button end **119** and a spring washer **113**.

[0052] The distal portion **19** of the needle deployment system depicted in FIG. **5** includes the spring washer **113**, a center tube **107**, a pusher wire **111**, and a guidance sleeve **109**. The spring washer **113** is seated upon the center tube **107**. The center tube **107** is housed by the surface **105** and is constrained in the distal portion **106** of the suturing instrument **100**. The pusher wire **111** is attached to the wireform **103** by means of a weld, a crimp, a coupling, adhesive, or other means, and is slideably disposed within the guidance sleeve **109**, the sleeve **109** being disposed within a surface **123** formed by the inside diameter of the center tube **107**. In one embodiment, the pusher wire **111** is constructed of a shape memory material, for example, a nickel titanium alloy such as Nitinol™. Preferably, the shape memory material is chosen for its combination of properties that allow for bendability and high column strength when constrained.

[0053] Referring now to the illustrative embodiment depicted in FIG. **6**, the distal portion of the suturing instrument **100** depicted in FIGS. **1** and **5** includes the distal portion **2***a* of the elongate shaft **2** and a distal portion of the needle deployment system **19** coupled to the needle carrier within suturing head **3**. The distal portion of the needle deployment system depicted in FIG. **6** includes the pusher wire **111**, a backstop washer **156**, a pocket **160** that includes a back wall **162**, a coupling **150**, a track **152**, a downstop washer **158**, a pocket **164** that includes a wall **166**, and a carrier wire **154**. The pusher wire **111** of the needle deployment system is attached by welding or other means to the coupling **150**, which is slideably disposed within the track **152**. The coupling **150** is attached to the carrier wire **154**, which by virtue of its attachment to the coupling **150** is also slideably disposed within the track **152**. The carrier wire **154** is mechanically coupled to the extendable needle carrier **5** by means of a weld, a coupling, adhesives, or other means. The coupling **150** abuts the backstop washer **156** that is slideably disposed about the pusher wire **111** and is con-

tained within the pocket **160** that includes the back wall **162**, against which the backstop washer **156** rests. The track **152** terminates distally in the pocket **164** that includes the wall **166**. The downstop washer **158** is slideably disposed about the carrier wire **154** and constrained within the pocket **164**.

[0054] Referring again to the handle component of the suturing instruments of the invention, handle **1** of the suturing instrument **100** can further include a control system coupled to the one or more pull wires for actively controlling deflection of the flexible portion of the elongate shaft. Various configurations of handles that include a control system coupled to one or more pull wires for controllably deflecting an elongate shaft of an endoscopic medical device, or a portion thereof, are described in U.S. Patent Application Publication No. 2008/0300462 and 2010/0121147, the contents of which are incorporated herein by reference in their entireties.

[0055] One illustrative embodiment of a handle configuration that includes a control system and is suitable for use in the suturing instruments of the invention is depicted in FIG. **8** and FIG. **9**. As shown in FIGS. **8** and **9**, the handle **1** includes a control system **22** to actively control the deflection of the distal portion **2***a* of the elongate shaft **2**. In the illustrated embodiment, the control system **22** comprises two activation hubs (rotatable cams) **24**, **26**, and four pull wires **28**, **30**, **32**, **34**. Each activation hub **24**, **26** is connected to two of the pull wires and allows the user (e.g., a surgeon) to manipulate the distal portion **2***a* of the elongate shaft **2** in one plane of deflection. Additional activation hubs and/or pull wires could be included in the control system **22** depending on how many planes of deflection are desired. The pull wires **28**, **30**, **32**, **34** are made from stainless steel, polymer filaments, or other metals and alloys such as, for example, Nitinol™.

[0056] The first activation hub **24** is movably attached to the right side of the handle **20** from the perspective of the user and includes a floating cam **36** and a cam stop **38**. The proximal ends of pull wires **30** and **34** are connected to the floating cam **36**. When the user rotates the first activation hub **24** in a clockwise direction, as indicated by line A on FIG. **9**, tension is applied to pull wire **34**, and tension is released from pull wire **30**, thereby deflecting the distal portion **2***a* of the elongate shaft **2** to the left. Conversely, when the user rotates the first activation hub **24** in the opposite, counter-clockwise direction, tension is applied to pull wire **30** and tension is released from pull wire **34**, thereby deflecting the distal portion **2***a* to the right.

[0057] The user can achieve up and down deflection of the distal portion **2***a* of elongate shaft **2** by rotating the second activation hub **26** in a similar manner. The second activation hub **26** is movably attached to the left side of the handle **1** from the perspective of the user and includes a floating cam **40** and a cam stop (not shown). The proximal ends of pull wires **28** and **32** are connected to floating cam **40**. When the user rotates the second activation hub **26** in a clockwise direction as indicated by line B on FIG. **9**, tension is applied to pull wire **28**, and tension is released from pull wire **32**, thereby deflecting the distal portion **2***a* in an upward direction. Conversely, when the user rotates the second activation hub **26** in the opposite, counter- clockwise direction, tension is applied to pull wire **32** and tension is released from pull wire **28**, thereby deflecting the distal portion **2***a* in a downward direction. The control system **22** could comprise additional components or alternative means for achieving defection of the distal portion **2***a* of the elongate shaft **2**.

[0058] The handle/control system can be used to deflect the flexible portion of the elongate shaft in one or more directions and/or planes relative to a longitudinal axis extending along the shaft. The control system can also be used to simultaneously deflect two or more portions of the elongate shaft in different planes relative to the longitudinal axis. For example, the control system can be used to deflect the distal portion **2***a* of the elongate shaft **2** into two or more different planes relative to the longitudinal axis, as shown in FIGS. **7A-7G**.

[0059] Another illustrative embodiment of a handle configuration that includes a control system and is suitable for use in the suturing instruments of the invention is shown in FIGS. **10-13**. In FIG. **10**, the handle **1** includes an elongate housing **312**, which includes a proximal end portion **314** and a distal end portion **316** and control system **310** disposed within the elongate housing **312**. The elongate housing **312** further includes a first grip portion **318** and a second grip portion **320** different than the first grip portion. Each of the first grip portion **318** and second grip portion **320** is adapted to be held or grasped by a hand of a user. The elongate housing **312** (and control system **310**) is couplable to the elongate shaft **2**.

[0060] The elongate housing **312** is adapted to be in a first orientation when the first grip portion **318** is operatively held by the hand of the user. For example, as illustrated in FIG. **11**, when the user holds the elongate housing **312** of the steering mechanism **310** by the first grip portion **318**, the elongate housing is in a substantially horizontal orientation. The user (e.g., a surgeon) can operate the steering button **322** with a single finger of the hand holding the first grip portion **318**.

[0061] As shown in FIG. **12** and FIG. **13**, control system **310** includes the steering button **322**, a first cam **330**, a second cam **350**, and first, second, third, and fourth wires **332**, **334**, **352**, **354**.

[0062] The first cam **330** moves in response to movement of the steering button **322**. The first cam **330** is adapted to move the flexible portion of the elongate shaft **2** along the first plane when the first cam moves in response to movement of the steering button **322**. As illustrated in FIG. **12**, the first cam **330** is at least partially disposed in the cavity **324** of the elongate housing **312**. The first cam **330** is coupled to the elongate housing **312** by a frame **336**. The frame **336** is coupled to an inner surface of the elongate housing **312** defining the cavity **324**. In the embodiment illustrated in FIG. **12** and FIG. **13**, the frame **336** includes a first supporting arm **342**, a second supporting arm **344**, and a central arm **346**. The first supporting arm **342** and second supporting arm **344** are each coupled to the elongate housing **312**. The central arm **346** extends between and is coupled to the first and second supporting arms **342**, **344**.

[0063] In the embodiment illustrated in FIG. **13**A, the central arm **346** defines an opening or pocket adapted to receive a portion of the first cam **330**. The first cam **330** is coupled to the central arm **346**. The first cam **330** can be coupled to the central arm **346** by any known coupling mechanism, including, but not limited to, a pin or other mechanical fastener.

[0064] The first cam **330** is movable with respect to the frame **336**. The first cam **330** is movable between at least a first position (illustrated in FIG. **12**), a second position

different than the first position, and optionally a third position different from the first and second positions.

[0065] The first cam **330** is coupled to the steering button **322**. In some embodiments, as illustrated in FIG. **12** and FIG. **13**, the first cam **330** is fixedly coupled to the stem **326** of the steering button **322**.

[0066] The first cam **330** is coupled to each of the first wire **332** and the second wire **334**. As illustrated in FIG. **12** and FIG. **13**, the first and second wires **332**, **334** are coupled to the first cam **330** at spaced locations. The first wire **332** can be coupled to the first cam **330** proximate to the steering button **322**. In the embodiment illustrated in FIG. **12**, the second wire **334** is coupled to a portion of the first cam **330** different than the portion of the cam coupled to the first wire **332**. The first wire **332** and the second wire **334** are each adapted to move in response to movement of the first cam **330**. Additionally, the first and second wires **332**, **334** are each coupled to the elongate member **302** of the suturing instrument **100**. Thus, movement of the first and second wires **332**, **334** moves the elongate shaft **2**.

[0067] Referring again to FIG. **12**, as the steering button **322** is moved in its first direction along a first axis (as indicated by arrow A_1), the first cam **330** correspondingly moves to a second position different than its first position. As the first cam **330** moves towards its second position, the first cam moves (or pulls on) the first wire **332**. The first wire **332** moves the flexible portion of the elongate shaft **2** in its first direction along the first plane (e.g., "up").

[0068] To return the elongate shaft **2** to its starting position (or the linear or relaxed position), the steering button **322** is moved in its second direction until the first cam **330** is moved (or returned) to its first position. In some embodiments, at least one of the steering button **322** and the first cam **330** is biased towards a first (or starting) position.

[0069] The handle/control systems depicted in FIGS. **8-13** are provided for illustrative purposes only and are not intended to be limiting. The handle/control system component of the suturing instruments of the invention may also include levers, knobs, robotics, a joystick, or other control features, all of which would be known to those knowledgeable about medical devices

[0070] Now referring back to the elongate shaft **2**, in certain embodiments, at least a portion of the elongate shaft **2** includes an articulation structure that provides flexibility to the articulated portion of the elongate shaft. For example, the distal portion **2***a* of the elongate shaft **2** can include an articulation structure. Alternatively, the entire elongate shaft **2** can include an articulation structure. The articulation structure can be used in conjunction with a flexible coil to provide a suturing instrument having increased flexibility and controlled maneuverability. The articulation structure can also be used as the sole means of providing flexibility to at least a portion of the elongate shaft. The articulation structure is coupled to the one or more pull wires for controllably deflecting the flexible and/or articulated portion of the elongate shaft **2**. Various articulation structures that are suitable for use in the suturing devices of the invention are described in U.S. Pat. No. 7,591,783 and U.S. Patent Application Publication No. 2008/0287741, each of which is incorporated herein by reference in its entirety.

[0071] One embodiment of an articulation structure **200** according to the present invention is made of a series of stacked links **212** that are positioned adjacent to one another, defining an inner lumen **214** and movable with respect to each other. Referring now to FIG. **14**, a link **212** according to one embodiment of the present invention includes a front face **216** and a rear face **218**. Each link may be deep drawn, rolled and welded, stamped, injection molded, or otherwise formed of stainless-steel or other biocompatible material that allows the link **212** to be rigid while having a thin wall profile in order to maximize the size of the inner lumen **214**.

[0072] The front face **216** of the link **212** includes a pair of oppositely arranged engagement surfaces that bisect the link **212** and define a pair of pivot points **220** that engage the corresponding rear face **218** of an adjacent link **212**. The pivot points **220** are rounded over forming substantially cylindrical surfaces that serve as bearings. The front face **216** of the link **212** further includes two tapered sections **222** that are angled proximally away from the pivot point **220**. The two tapered sections **222** are oriented at an angle of A° with respect to the longitudinal axis **224** of the link **212**. The terms proximal and distal require a point of reference. In this application, the point of reference is the perspective of the user. Therefore, the term proximal will always refer to an area closest to the user, whereas distal will always refer to an area away from the user.

[0073] Similarly, the rear face **218** of the link **212** includes two sloped sections **226** that are angled distally away from a relatively flat surface **228** of the rear face **218** forming a wedge shaped recess **230** with a vertex **232** for receiving the pivot points **220** of the adjacent link **212**. As with the tapered sections **222** at the front face **216** of the link, the sloped sections **226** of the rear face **218** are oriented at an angle of B° with respect to the longitudinal axis **224**. Additionally, the vertex **232** is rounded to form a substantially cylindrical surface to engage the rounded over surface of the pivot points **220**.

[0074] A plurality of wire channels **234**, **236**, **238**, **240**, are integrally formed in the link **212** itself or otherwise disposed on the inner surface **242** of the link **212**. The wire channels are radially spaced at predetermined distances around the circumference of the link **212**. As shown in FIG. **14**, channels **236** and **240** are positioned at the pivot points **220**, while channels **234** and **238** are rotated 90° with respect to channels **236** and **240**.

[0075] Referring now to FIGS. **15-17**, the articulation structure **200** is created by stacking a number of links **212***a*, **212***b*, **212***c*, etc., such that that the pivot points **220** of each link **212** are aligned with the vertex **232** of the adjacent link **212**. Locking pull-wires **246** and **250** disposed in wire channels **236** and **240** provide tension to hold adjacent links **212***a*, **212***b*, **212***c*, etc., together while the one or more pull-wires designated in FIGS. **15-17** as **244** and **248** are components of the control system for bending the articulation structure in the desired direction.

[0076] Pull wires **244** and **248** can be coupled to the control system disposed within or on handle, such as the control system **22** illustrated in FIGS. **8** and **9**.

[0077] The proximal ends of pull-wires **244** and **248** can be connected to the rotatable cam in the control system **22** and the distal ends of the pull-wires **244** and **248** are connected to the distal end **254** of the articulation structure **200** (FIG. **16**). As shown in FIG. **17**, when the user rotates the rotatable cam in control system **22** in the clockwise direction as indicated by line C on, tension is applied to pull-wire **244**, and tension is released from pull-wire **248**, thereby deflecting the distal end **254** of the articulation structure in an upward direction. Conversely, when the user

rotates the control cam **252** in a counter-clockwise direction, tension is applied to pull-wire **248** and released from pull-wire **244**, thereby deflecting the distal end **254** in a downward direction.

[0078] The deflection capability of the articulation structure **200** is a function of the difference between angles A and B and the number of links N, which can be represented by the formula: deflection angle=(A−B)/2×(N−1). For example, in the embodiment shown in FIG. **15**, if angle A is 140°, angle B is 100°, and there are **11** links including the first and last link the deflection would be 200°. The radius of deflection is a function of the angle difference and the length of the link (i.e., shorter links will produce a smaller bend radius).

[0079] Other illustrative embodiments of an articulation structure **1000** for use in the suturing devices of the invention are depicted in FIGS. **18**A-**18**C. Referring now to FIG. **18**A, the articulation structure **1000** is made of a series of stacked rings **1002***a*, **1002***b*, **1002***c*, etc. Each ring is preferably formed of a deep-drawn steel or other metal that allows the ring to be stiff while having a thin wall profile in order to maximize the size of the inner lumen. Positioned at equal intervals around the outer circumference of the ring are inwardly extending concave recesses **1004** that receive short spring sections **1006** that are used to join adjacent rings together. Two springs on opposite sides of a ring **1002** are used to join adjacent rings together. For example, if three rings **1002***a*, **1002***b*, and **1002***c* are aligned, the rings **1002***a* and **1002***b* are joined together with spring segments located at 0° and 180° on the rings, while ring **1002***b* is joined to ring **1002***c* with orthogonally aligned spring segments located at 90° and 270° around the rings. A gap is formed between adjacent rings so that the pair of springs forms a flexible joint that can bend in directions that are the away from the longitudinal axis of the articulation structure but has limited ability to compress the articulation structure in the direction of the longitudinal axis of the articulation structure. Each spring **1006** is secured within the concave recess **1004** of the ring **1002** using an adhesive, crimping, welding, or with other securing mechanism.

[0080] In the embodiment depicted in FIG. **18**A, one or more pull wires pass through the center of the spring segments and/or on the outer circumference of the articulation structure. The one or more pull wires are coupled to a control system disposed within or on handle **1** (e.g., the control system **22** depicted in FIGS. **8** and **9**, or control system **310** depicted in FIGS. **10**-**13**). As such, the articulation structure can be controllably deflected by the pull wires coupled to the control system.

[0081] FIG. **18**B illustrates an alternative embodiment of the articulation structure shown in FIG. **18**A. In this embodiment, the articulation structure comprises a number of deep drawn or otherwise formed metal rings **1008***a*, **1008***b*, **1008***c* that are joined together with springs that are located on the inner circumference of each ring. Each ring is connected to an adjacent ring with a pair of spring segments located on opposite sides of the ring. The springs **1010** are secured to the inner circumference of the rings **1008** with an adhesive or by welding, or using other securing means. In the embodiment shown in FIG. **18**B, the one or more pull wires are routed through the spring segments and are more closely positioned to the longitudinal axis of the articulation structure. Being closer to the longitudinal axis may require more force on a pull wire to bend the articulation structure in a desired direction.

[0082] FIG. **18**C shows another embodiment of an articulation joint that is similar to the articulation joint shown in FIG. **18**B. However, in this embodiment, the articulation joint is comprised of a number of rings **1022***a*, **1022***b*, **1022***c* having oppositely arranged concave recesses **1024** and convex recesses that allow a spring **1015** having alternate tightly and loosely wound segments to pass on the outside of one ring and on the inside of an adjacent ring in an alternating fashion. The oppositely arranged convex and concave recesses allow a spring to be secured to the ring with an adhesive, welding, or other bonding mechanism.

[0083] Although the discs of the articulation structures described herein are generally circular in shape, it will be appreciated that other shapes could be used.

[0084] The embodiments of flexible and/or articulated suturing instruments described herein are provided for illustrative purposes only and are not intended to be limited. Additional deflection sections and/or pull-wires could be included in the elongate shaft of the suturing instrument and/or the control system, depending on how many planes of deflection are desired.

[0085] The suturing instrument's component materials should be biocompatible. For example, the handle **1**, the elongate shaft **2**, and portions of the suturing head **3** and needle deployment system, or portions thereof, may be fabricated from extruded, molded, or machined plastic material(s), such as polypropylene, polycarbonate, or glass-filled polycarbonate. Other components, for example the needle **6**, may be made of stainless steel. Preferably, the pull-wires are made from stainless steel, polymer filaments, strong textile or synthetic material such as Kevlar® or nylon, or other metals and alloys such as, for example, Nitinol™, which is a nickel- titanium alloy. Other suitable materials will be apparent to those skilled in the art. The material(s) used to form the suture should be biocompatible. The surgeon will select the length, diameter, and characteristics of the suture to suit a particular application. Additionally, the mechanical components and operation are similar in nature to those disclosed in U.S. Pat. Nos. 5,364,408, 5,575,800, 6,048,351, and 6,346,111, and commonly owned U.S. application Ser. No. 10/210,984 (published as U.S. Patent Application Publication No. 2004/0034372), each of which is incorporated by reference herein in its entirety.

[0086] Certain embodiments according to the invention have been disclosed. These embodiments are illustrative of, and not limiting on, the invention. Other embodiments, as well as various modifications and combinations of the disclosed embodiments, are possible and within the scope of the disclosure.

1. A suturing instrument, comprising

a handle;

an elongate shaft extending from the handle, at least a portion of the elongate shaft being flexible;

one or more pull wires extending from the handle into the flexible portion of the elongate shaft for deflecting the flexible portion of elongate shaft; and

a suturing head extending from a distal end of the elongate shaft, the suturing head comprising a needle carrier channel, a needle carrier configured to releasably hold a needle, and a needle catch, the needle carrier being movably disposed within the needle carrier channel.

2. The suturing instrument of claim **1** wherein the needle carrier moves along the needle carrier channel out of the

suturing head into an extended position, and back into the suturing head into a retracted position.

3. The suturing instrument of claim **2** further comprising a needle deployment system at least partially disposed within the elongate shaft and coupled to needle carrier for moving the needle carrier between the extended position and the retracted position.

4. The suturing instrument of claim **3** wherein the needle deployment system moves the needle carrier out of the suturing head in a semi-circular path towards the needle catch such that the needle held by the needle carrier is released from the needle carrier and retained in the needle catch.

5. The suturing instrument of claim **3** wherein the handle includes an actuating mechanism coupled to the needle deployment system for actuating the needle deployment system.

6. The suturing instrument of claim **1** wherein the handle includes a control system coupled to the one or more pull wires for controlling deflection of the flexible portion of the elongate shaft.

7. The suturing instrument of claim **6** wherein the control system includes a rotatable cam coupled to the one or more pull wires.

8. The suturing instrument of claim **6** wherein the control system includes one or more knobs, hubs or levers attached to the one or more pull wires.

9. The suturing instrument of claim **1** wherein the elongate shaft is capable of being deflected into multiple different planes relative to a longitudinal axis of the elongate shaft.

10. The suturing instrument of claim **1** wherein the elongate shaft comprises a flexible coil.

11. The suturing instrument of claim **10** wherein the flexible coil comprises a Bowden coil.

12. The suturing instrument of claim **10** wherein the elongate shaft further includes an outer sleeve disposed on the outside of the flexible coil to provide a smooth exterior surface.

13. The suturing instrument of claim **1** wherein at least a portion of the elongate shaft includes an articulation structure.

14. The suturing instrument of claim **13** wherein the flexible portion of the elongate shaft includes an articulation structure.

15. The suturing instrument of claim **13** wherein the articulation structure comprises a series of stacked links disposed adjacent to one another and movable with respect to each other, each link including a front face tapered to a pair of pivot points and a rear face defining a wedge shaped recess for receiving the pivot points of the adjacent link, and wherein said one or more pull-wires are configured for providing tension to the articulation structure and holding the adjacent links together.

16. The suturing instrument of claim **13** wherein the articulation structure comprises:

a first articulation section, the first articulation section includes a first series of stacked links disposed adjacent to one another and movable with respect to each other, each link including a front face tapered to a pair of pivot points and a rear face defining a wedge shaped recess for receiving the pivot points of the adjacent link;

a second articulation section, the second articulation section includes a second series of stacked links disposed adjacent to one another and movable with respect to each other, each link including a front face tapered to a pair of pivot points and a rear face defining a wedge shaped recess for receiving the pivot points of the adjacent link, the wedge shaped recesses of the first articulation section radially offset from the wedge shaped recesses of the second articulation section;

wherein said one or more pull wires are configured for providing tension to the articulation structure and holding the adjacent links together.

17. The suturing instrument of claim **13** wherein said articulation structure comprises:

a number of ring links, each having an inner circumference and an outer circumference, each ring link including:

two concave recesses with openings that face radially outward from the outer circumference of the ring link that are positioned on opposite sides of the outer circumference of the ring link; and

two concave recesses with openings that face radially inward from the inner circumference of the ring link that are positioned on opposite sides of the inner circumference of the ring link and are oriented at **90** degrees to the two concave recesses positioned on opposite sides of the outer circumference of the ring link; and

a plurality of spring segments that are secured within the concave recesses on the outer circumferences and inner circumferences of the ring links to join adjacent ring links together and that are bendable in the articulating joint;

wherein the concave recesses on the outer circumference of a given ring link are aligned with the concave recesses on the inner circumference of an adjacent ring link in the articulating joint.

18. The suturing instrument of claim **17** wherein the spring segments define apertures adapted to receive the one or more pull wires therethrough.

19. A suturing instrument, comprising

a handle including a control system;

an elongate shaft extending from the handle, the elongate shaft including a distal portion, at least a portion of the elongate shaft being flexible;

one or more pull wires extending from the handle into the distal portion of the elongate shaft, the one or more pull wires coupled to the control system to allow active control of the flexible portion of the elongate shaft; and

a suturing head extending from a distal end of the distal portion of the elongate shaft, the suturing head comprising a needle carrier channel, a needle carrier configured to releasably hold a needle, and a needle catch, the needle carrier being movably disposed within the needle carrier channel.

20. A suturing instrument, comprising

a handle;

an elongate shaft extending from the handle, the elongate shaft including a distal portion, at least a portion of the shaft being flexible and including an articulation structure;

one or more pull wires extending from the handle into the distal portion of the elongate shaft for deflecting the articulated portion of elongate shaft; and

a suturing head extending from a distal end of the distal portion of the elongate shaft, the suturing head comprising a needle carrier channel, a needle carrier configured to releasably hold a needle, and a needle catch, the needle carrier being movably disposed within the needle carrier channel.

* * * * *

专利名称(译)	灵活的缝合仪器		
公开(公告)号	US20190142413A1	公开(公告)日	2019-05-16
申请号	US16/249338	申请日	2019-01-16
[标]申请(专利权)人(译)	波士顿科学西美德公司		
申请(专利权)人(译)	BOSTON SCIENTIFIC SCIMED，INC.		
当前申请(专利权)人(译)	BOSTON SCIENTIFIC SCIMED，INC.		
[标]发明人	FAIRNENY TY		
发明人	FAIRNENY, TY		
IPC分类号	A61B17/04		
CPC分类号	A61B17/0469 A61B17/0482 A61B17/0625 A61B2017/00314 A61B2017/2927 A61B2017/00323		
优先权	61/451366 2011-03-10 US		
外部链接	Espacenet USPTO		

摘要(译)
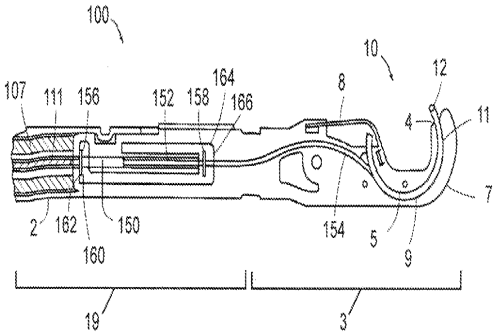
缝合器械包括手柄，细长轴和缝合头。一个或多个拉线从手柄延伸到细长轴中，用于在一个或多个方向和/或平面上可控地偏转细长轴的可偏转部分，以在内窥镜或腹腔镜外科手术过程中改善患者体内的可操作性并且用于改变缝合头的位置。