US009078687B2

(12) **United States Patent**
Rohaninejad et al.

(10) **Patent No.: US 9,078,687 B2**
(45) **Date of Patent: Jul. 14, 2015**

(54) **METHODS AND SYSTEMS FOR MAGNETICALLY SUSPENDING TISSUE STRUCTURES**

(71) Applicant: **Mohammadreza Rohaninejad**, San Jose, CA (US)

(72) Inventors: **Mohammadreza Rohaninejad**, Saratoga, CA (US); **Seyed Ali Mirnajafi**, Irvine, CA (US); **Mostafa Rohaninejad**, Saratoga, CA (US); **Morteza Rohaninejad**, Saratoga, CA (US)

(73) Assignee: **Mohammadreza Rohaninejad**, San Jose, CA (US)

(*) Notice: Subject to any disclaimer, the term of this patent is extended or adjusted under 35 U.S.C. 154(b) by 0 days.

(21) Appl. No.: **14/055,193**

(22) Filed: **Oct. 16, 2013**

(65) **Prior Publication Data**

US 2014/0243587 A1 Aug. 28, 2014

Related U.S. Application Data

(63) Continuation of application No. 14/030,581, filed on Sep. 18, 2013.

(60) Provisional application No. 61/770,159, filed on Feb. 27, 2013.

(51) **Int. Cl.**
A61B 17/29 (2006.01)
A61B 17/28 (2006.01)
(Continued)

(52) **U.S. Cl.**
CPC ***A61B 17/29*** (2013.01); ***A61B 17/122*** (2013.01); ***A61B 17/282*** (2013.01);
(Continued)

(58) **Field of Classification Search**
CPC .. A61B 17/122; A61B 17/29; A61B 17/2833; A61B 2019/2253; A61B 2019/2257; A61B 17/0281
USPC 606/139–143, 151, 157, 158, 205–211
See application file for complete search history.

(56) **References Cited**

U.S. PATENT DOCUMENTS

7,169,104 B2 1/2007 Ueda et al.
7,766,810 B2 8/2010 Ohdaira
(Continued)

FOREIGN PATENT DOCUMENTS

WO WO 2008/089049 A1 7/2008
WO WO 2009/019288 A2 2/2009

OTHER PUBLICATIONS

U.S. Appl. No. 14/030,581, filed Sep. 18, 2013, Rohaninejad et al.
(Continued)

Primary Examiner — Thomas McEvoy
(74) *Attorney, Agent, or Firm* — Wilson Sonsini Goodrich & Rosati

(57) **ABSTRACT**

A system for magnetically suspending tissue includes a grasper placement tool, a tissue grasper, a magnetic coupling element, and a tether which secures the magnetic coupling element to the tissue grasper. The grasper placement tool is used to simultaneously introduce both the tissue grasper and the magnetic coupling element to a body cavity. The grasper then releases the magnetic coupling element and engages a target tissue structure. The tissue grasper is then detached from the placement tool and a conventional laparoscopic or other grasper is used to engage the magnetic coupling element to an external magnet.

15 Claims, 15 Drawing Sheets

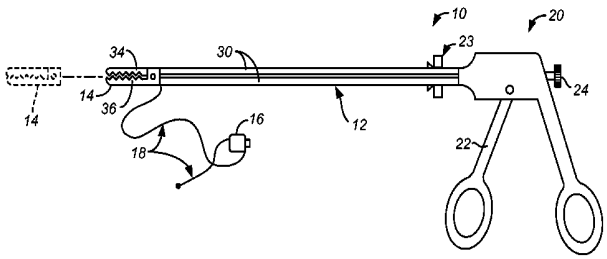

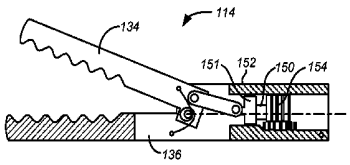

(51) **Int. Cl.**
A61B 17/122 (2006.01)
A61B 17/00 (2006.01)
A61B 19/00 (2006.01)

(52) **U.S. Cl.**
CPC .. ***A61B 17/2833*** (2013.01); *A61B 2017/00283* (2013.01); *A61B 2017/00818* (2013.01); *A61B 2017/00876* (2013.01); *A61B 2019/2253* (2013.01)

(56) **References Cited**

U.S. PATENT DOCUMENTS

2002/0107533 A1* 8/2002 Solingen 606/151
2007/0004958 A1* 1/2007 Ohdaira 600/12
2007/0135678 A1* 6/2007 Suzuki 600/37
2007/0156028 A1* 7/2007 Van Lue et al. 600/237
2007/0161855 A1 7/2007 Mikkaichi et al.
2008/0171907 A1 7/2008 Long et al.
2009/0043246 A1 2/2009 Dominguez
2009/0192344 A1* 7/2009 Bakos et al. 600/12
2010/0204727 A1 8/2010 Dominguez
2012/0088965 A1 4/2012 Stokes et al.
2012/0238796 A1 9/2012 Conlon

OTHER PUBLICATIONS

International search report dated Apr. 29, 2014 for PCT Application No. US2014/015807.

* cited by examiner

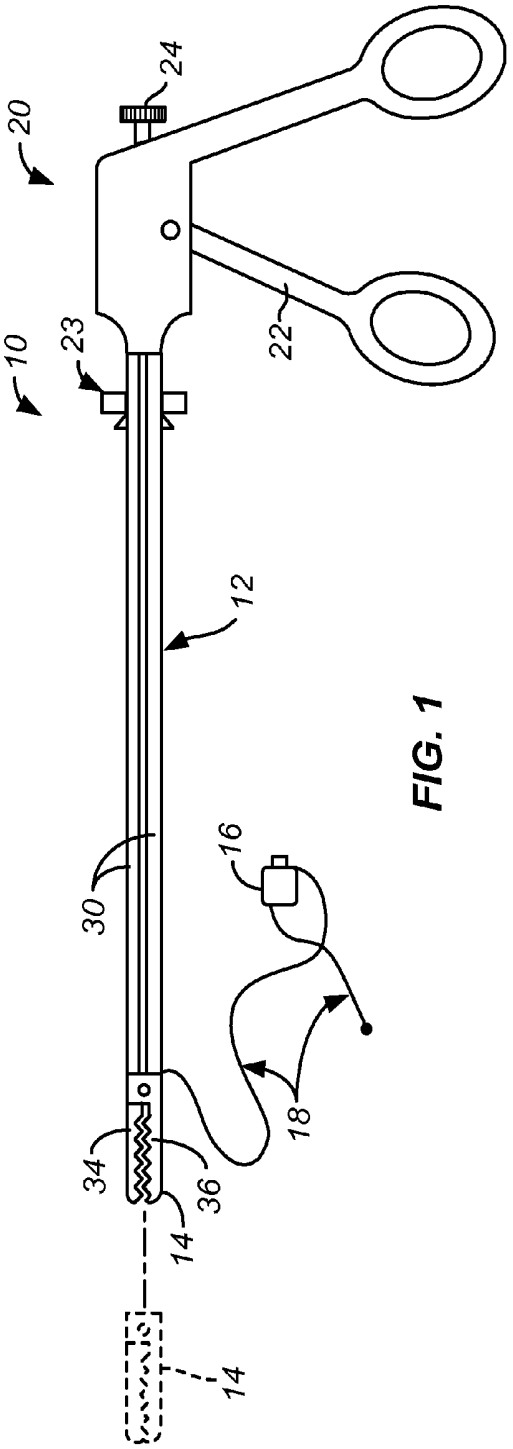

FIG. 1

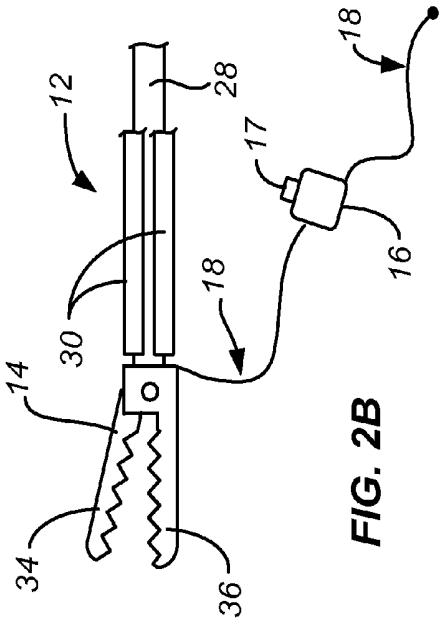

FIG. 2B

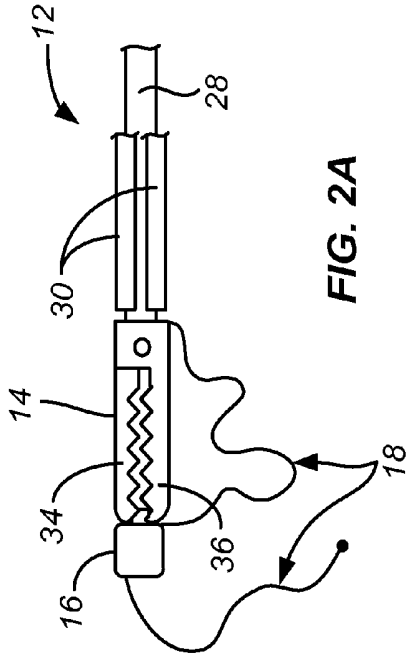

FIG. 2A

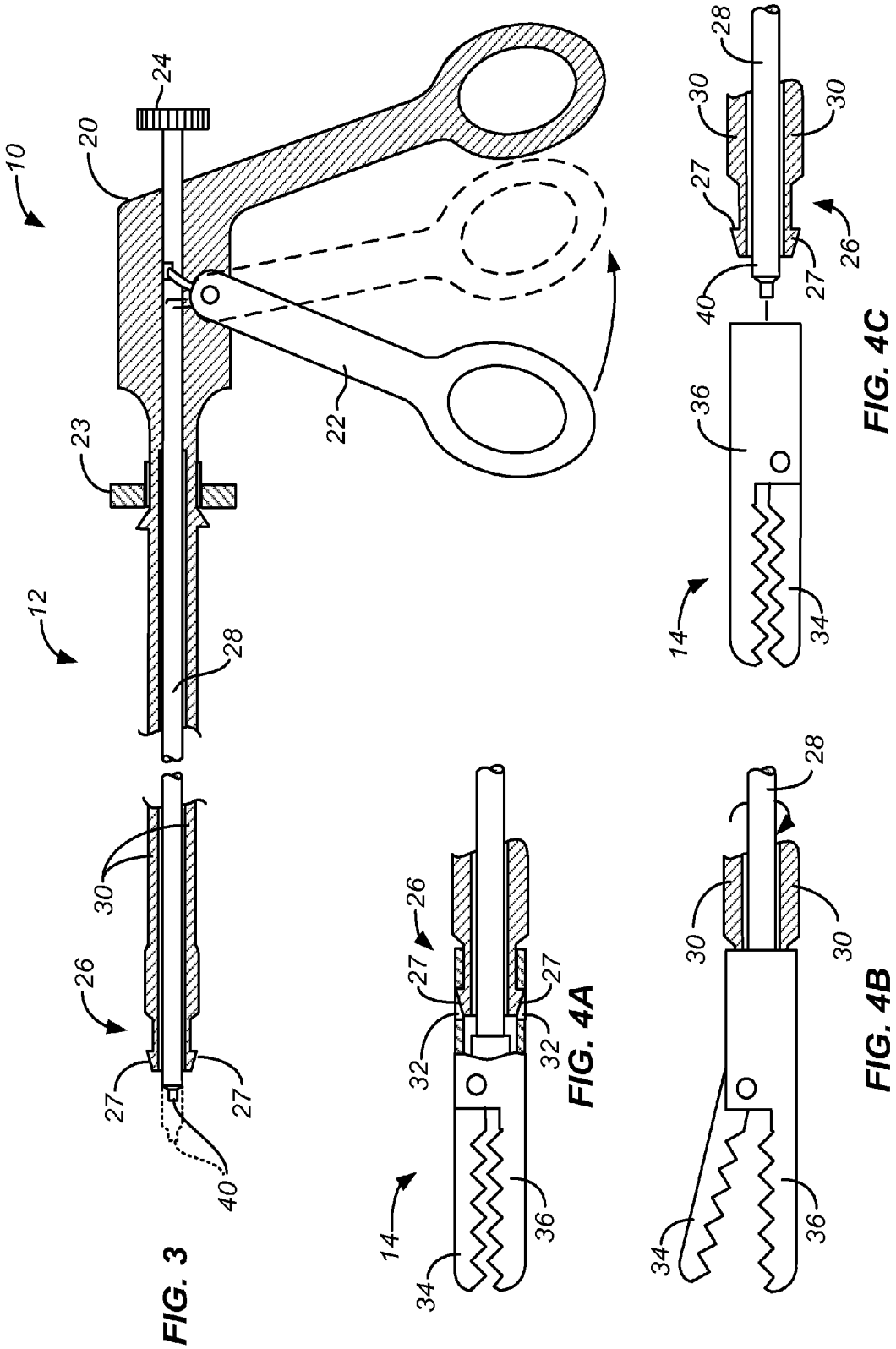

FIG. 3

FIG. 4A

FIG. 4B

FIG. 4C

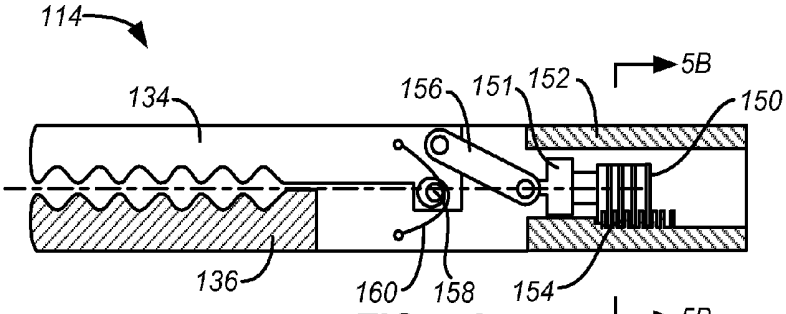

FIG. 5A

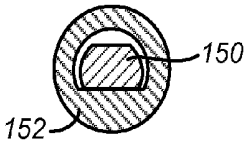

FIG. 5B

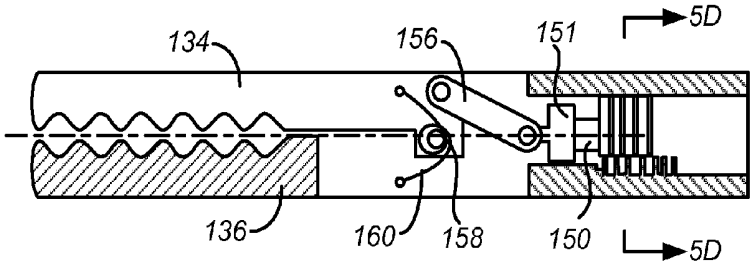

FIG. 5C

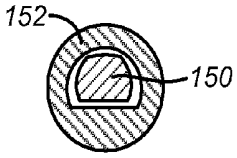

FIG. 5D

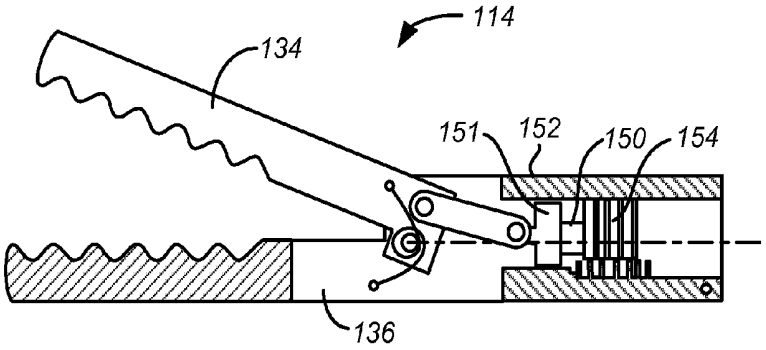

FIG. 5E

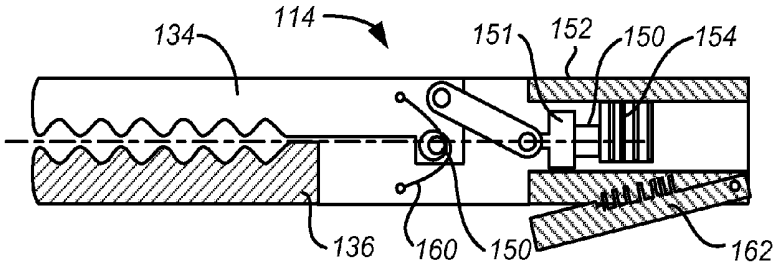

FIG. 5F

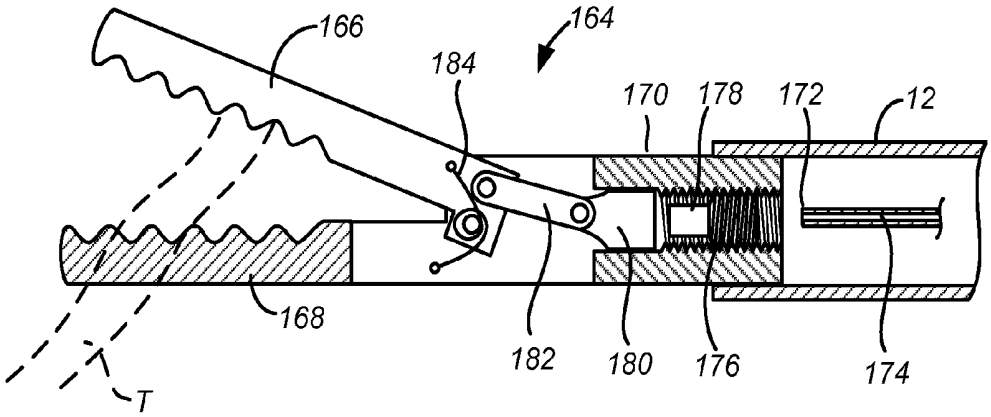

FIG. 5G

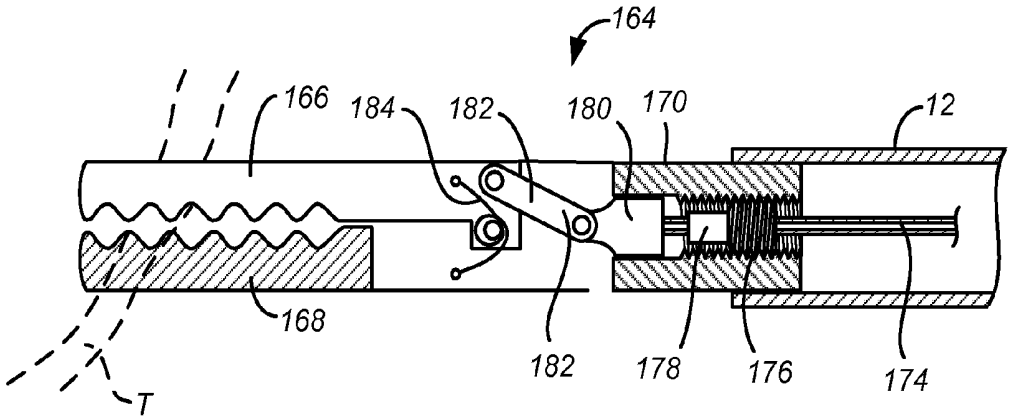

FIG. 5H

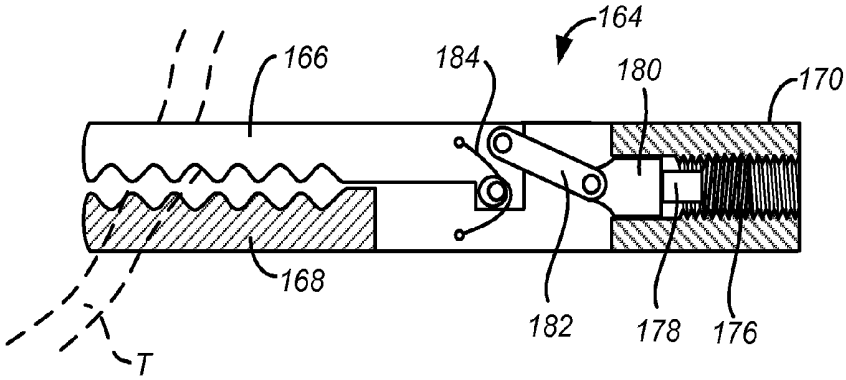

FIG. 5I

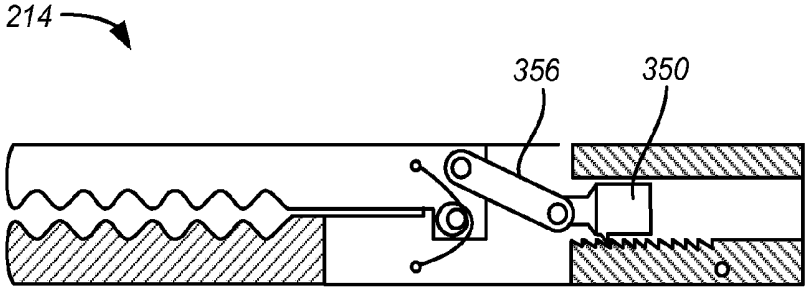

FIG. 6A

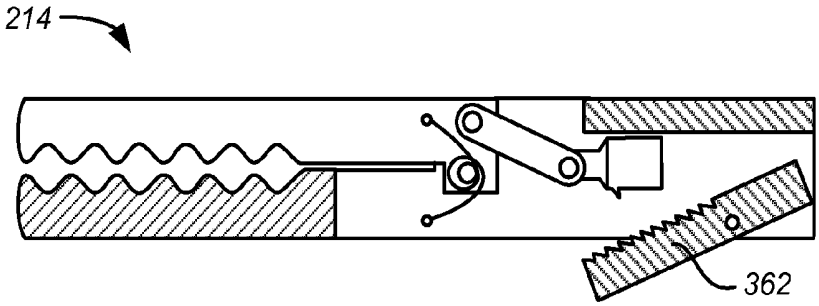

FIG. 6B

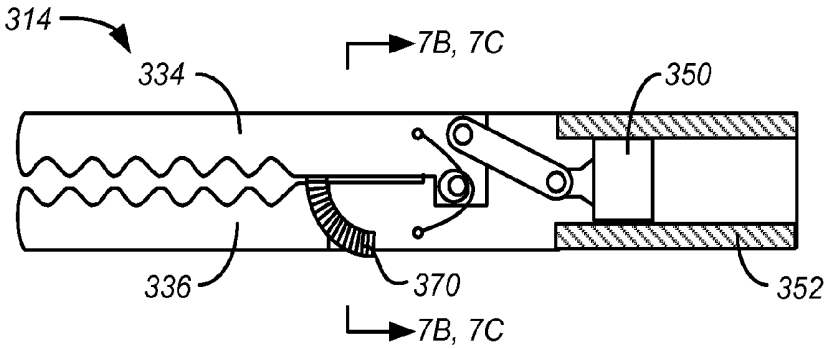

FIG. 7A

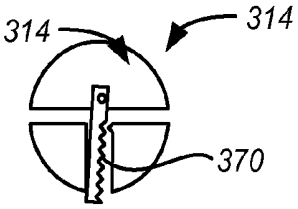

FIG. 7B

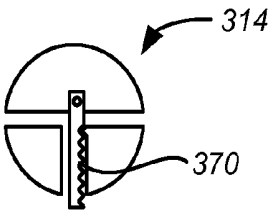

FIG. 7C

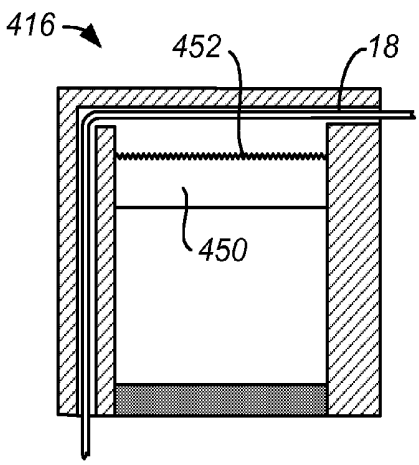

FIG. 8A

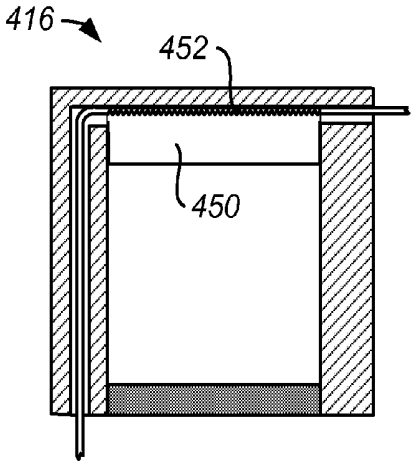

FIG. 8B

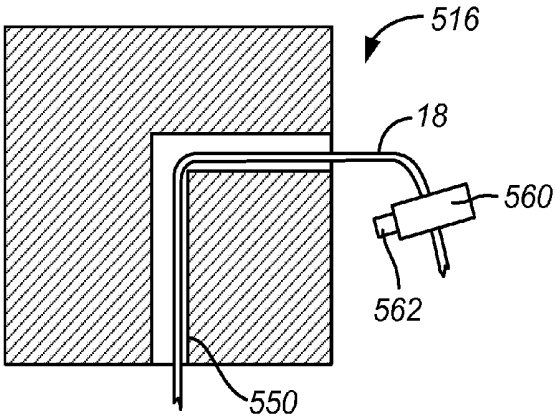

FIG. 9A

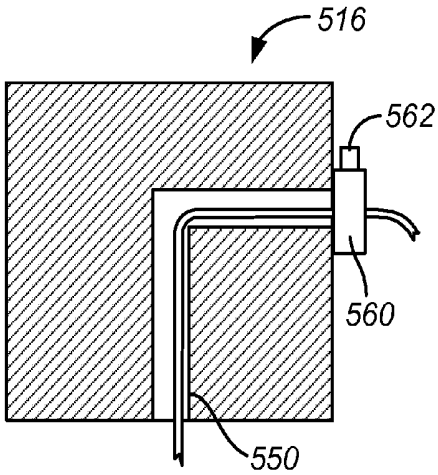

FIG. 9B

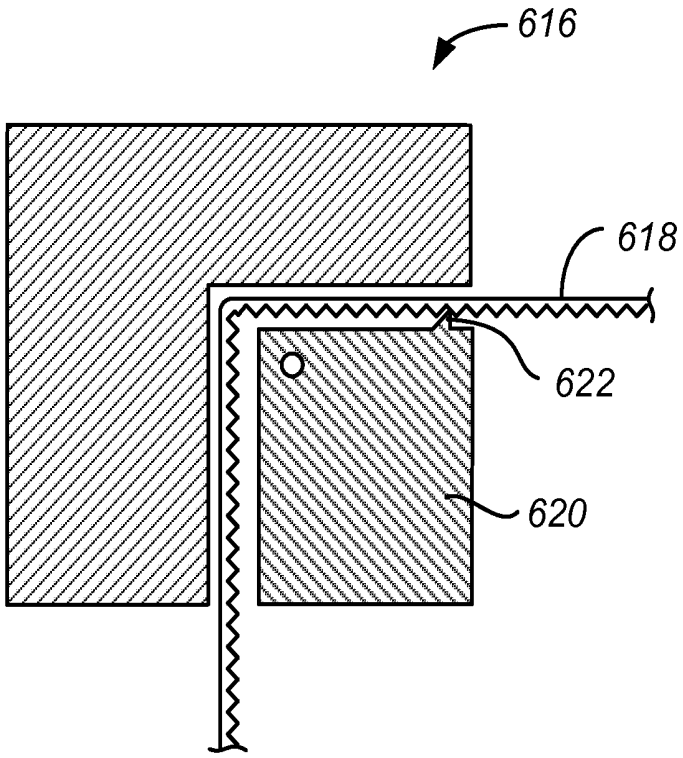

FIG. 10A

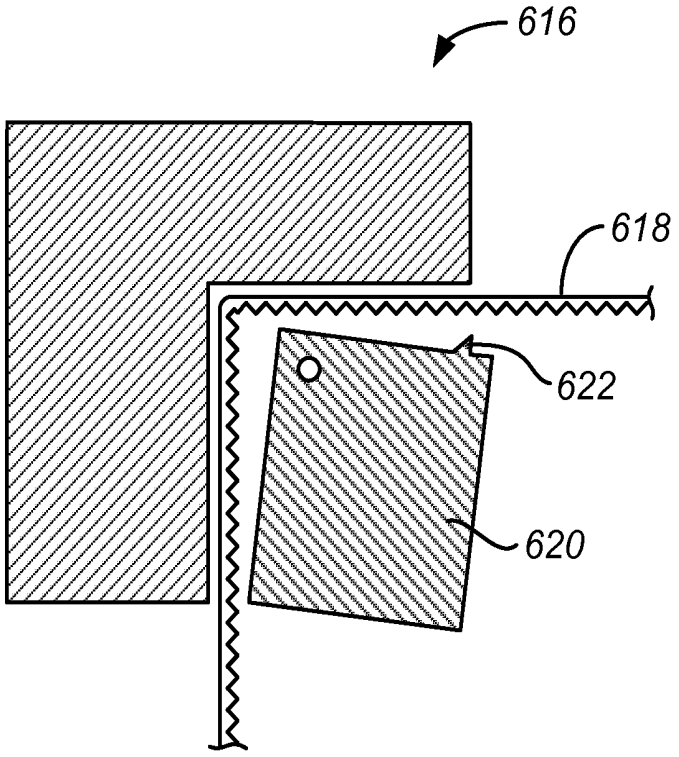

FIG. 10B

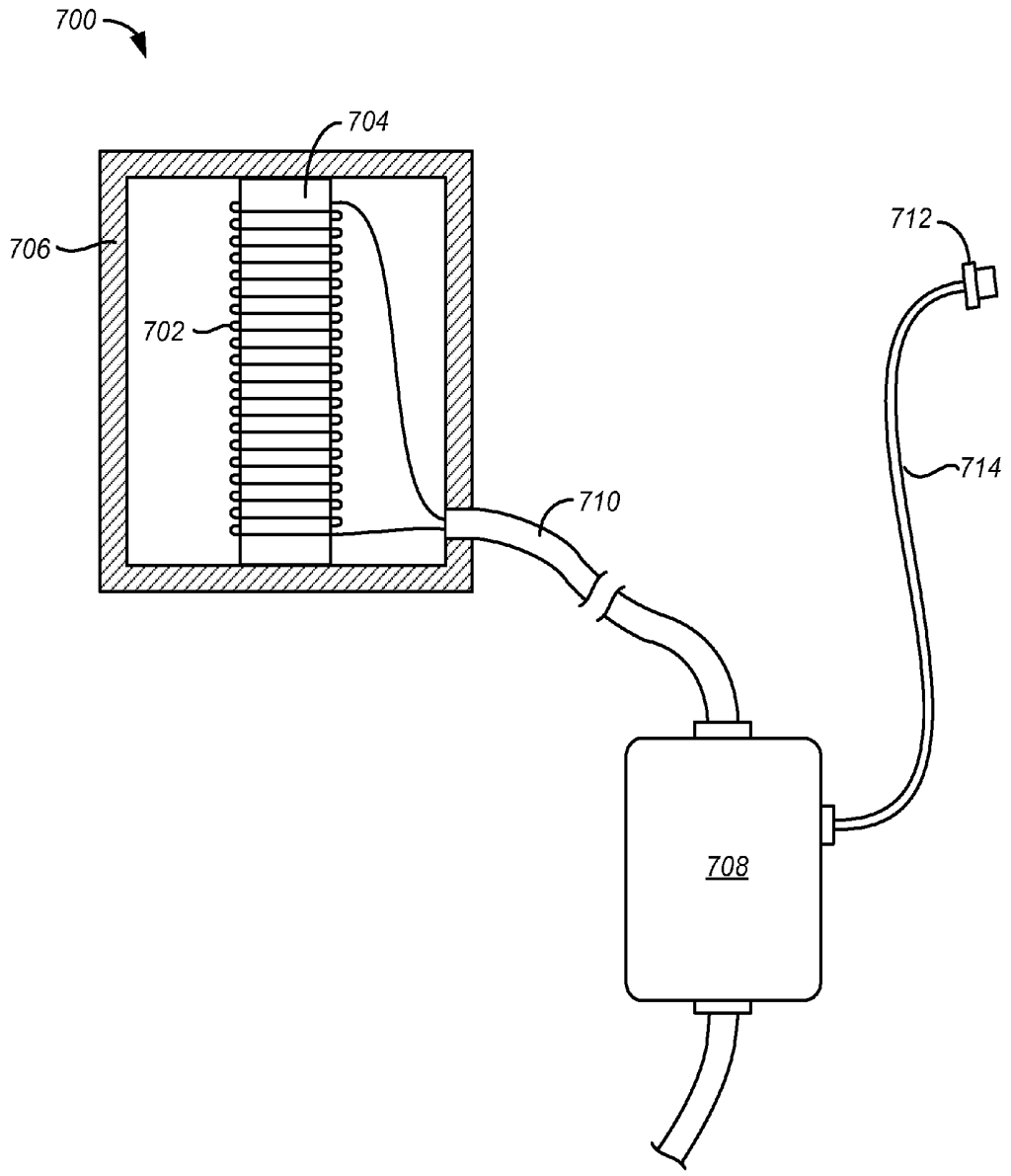

FIG. 10C

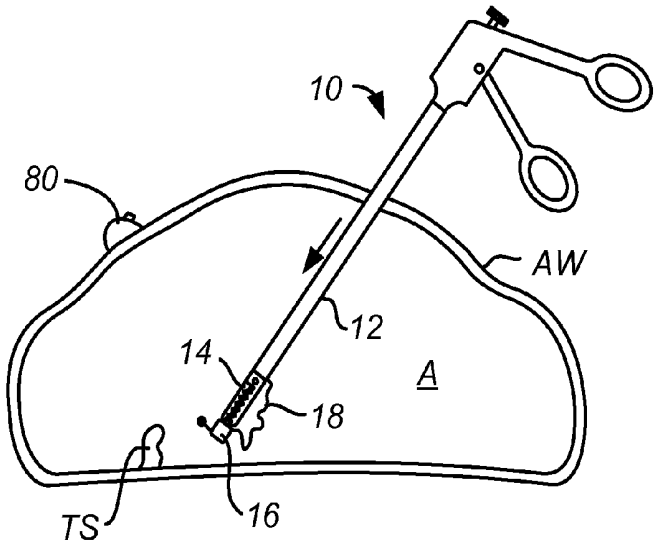

FIG. 11A

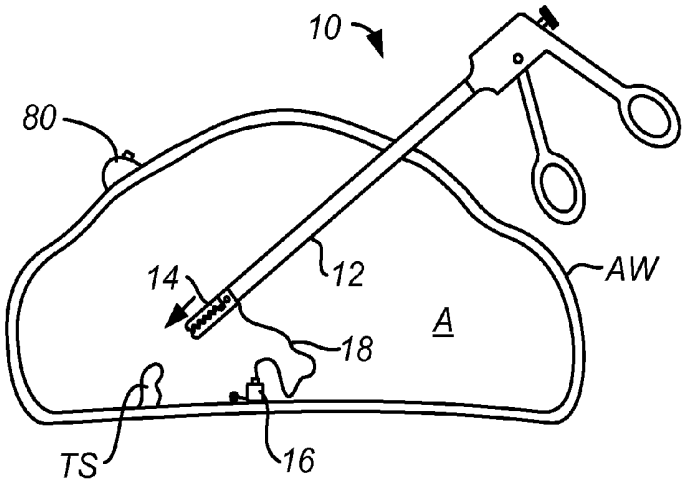

FIG. 11B

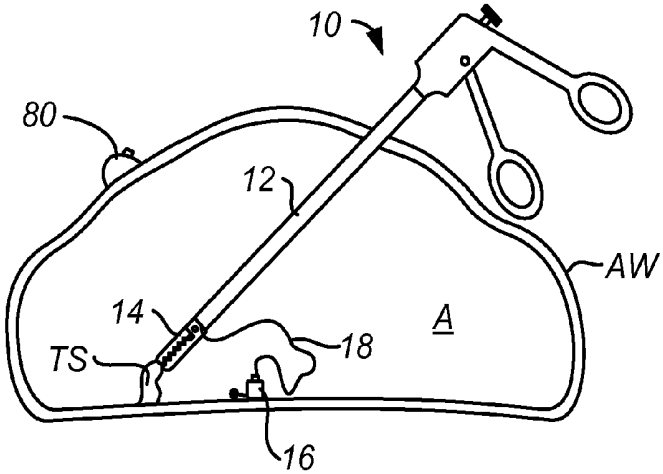

FIG. 11C

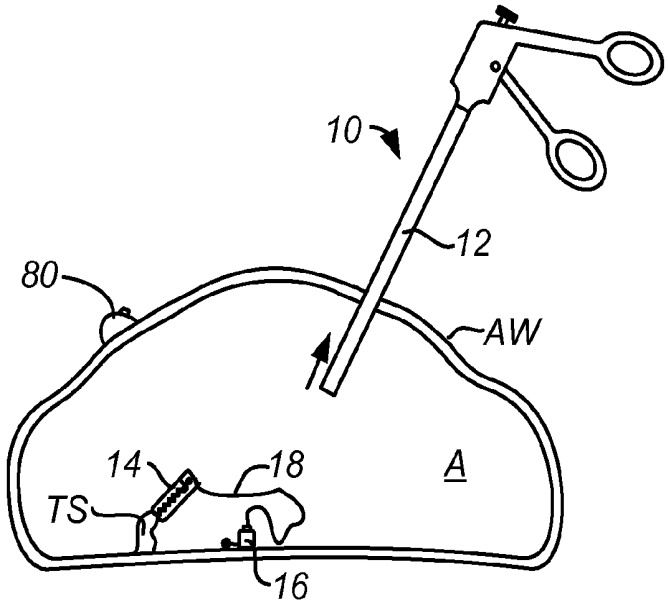

FIG. 11D

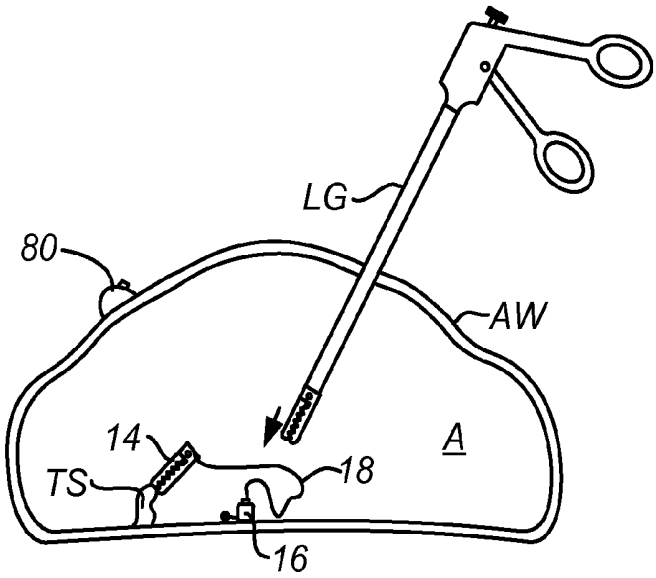

FIG. 11E

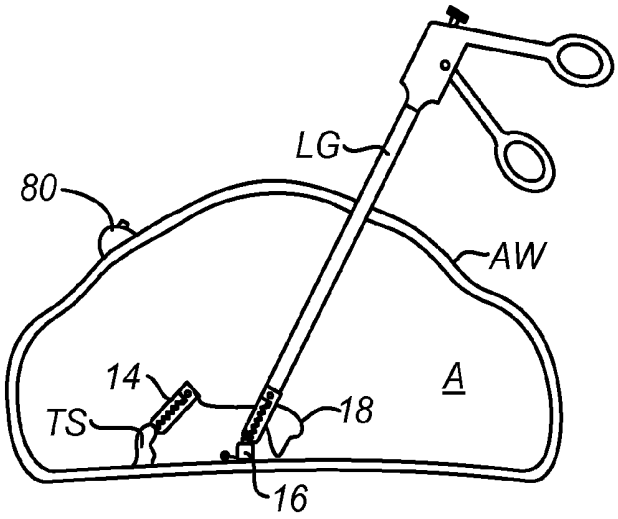

FIG. 11F

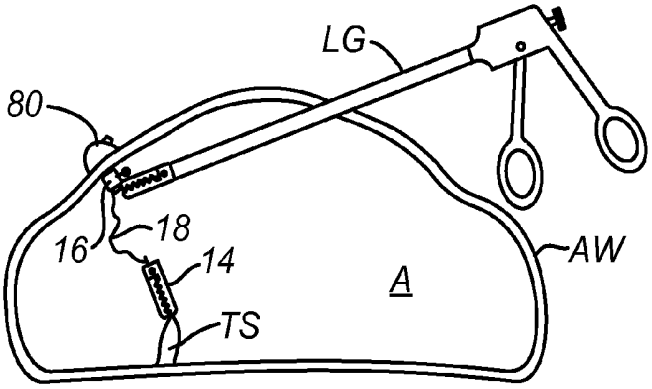

FIG. 11G

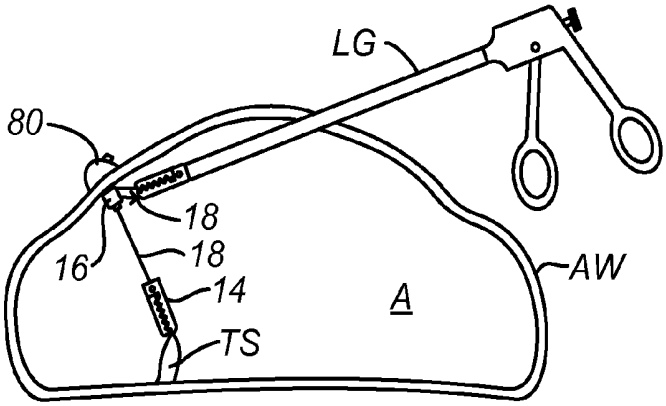

FIG. 11H

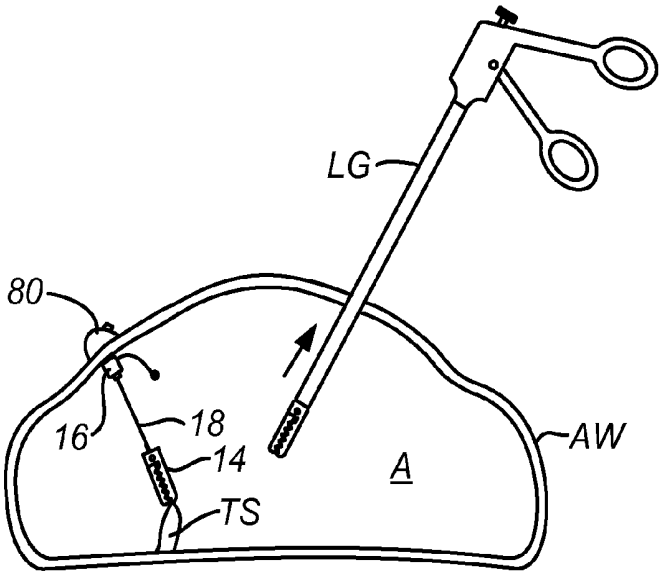

FIG. 11I

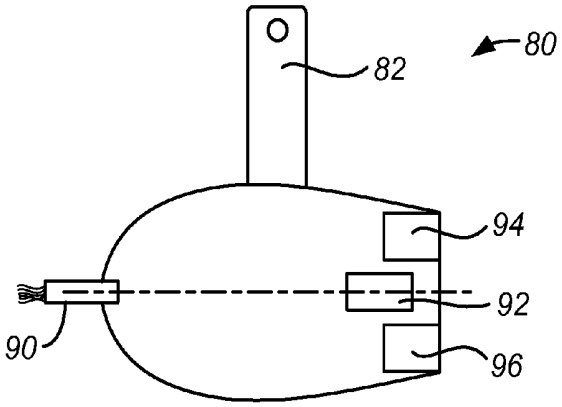

FIG. 12A

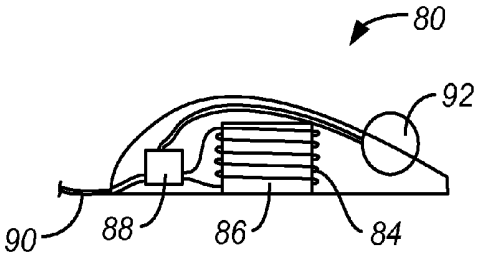

FIG. 12B

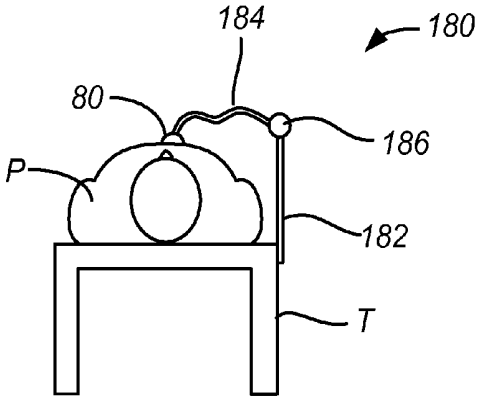

FIG. 13A

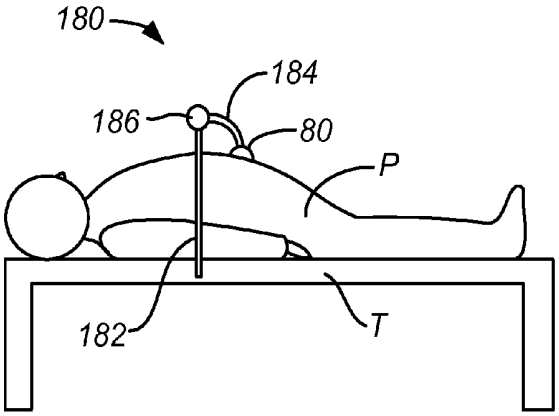

FIG. 13B

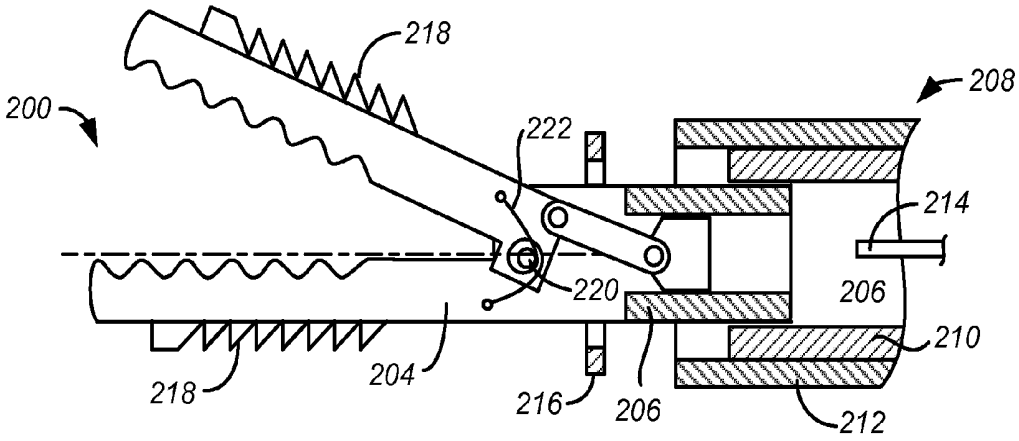

FIG. 14A

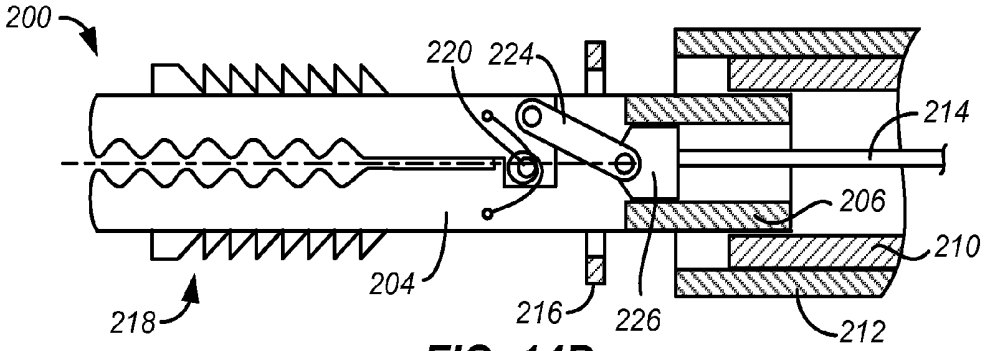

FIG. 14B

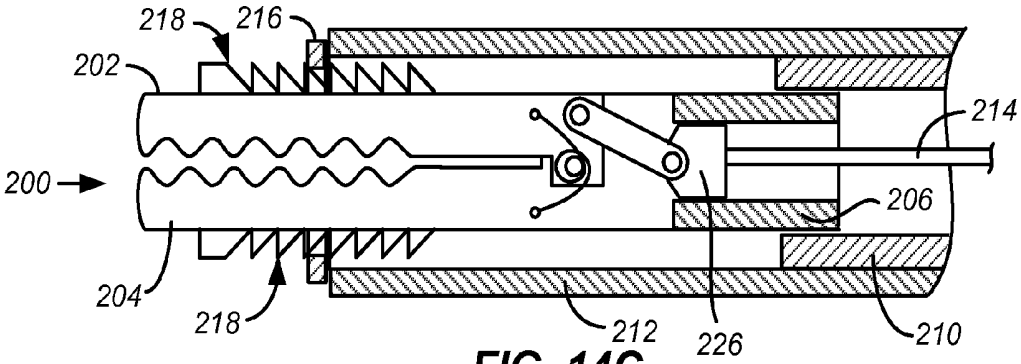

FIG. 14C

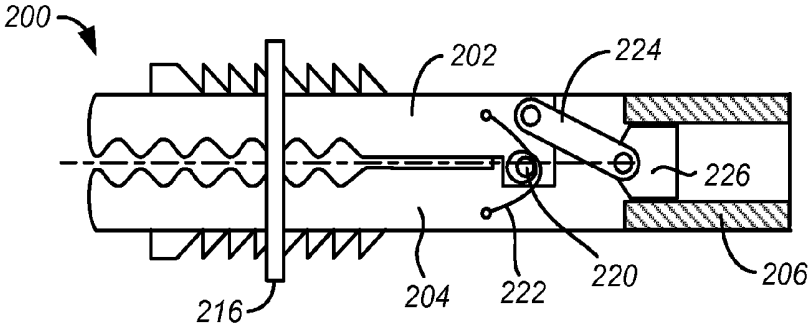

FIG. 14D

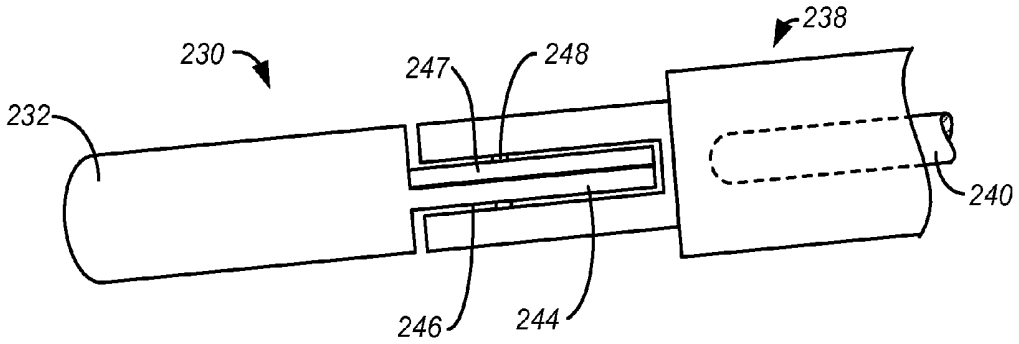

FIG. 15A

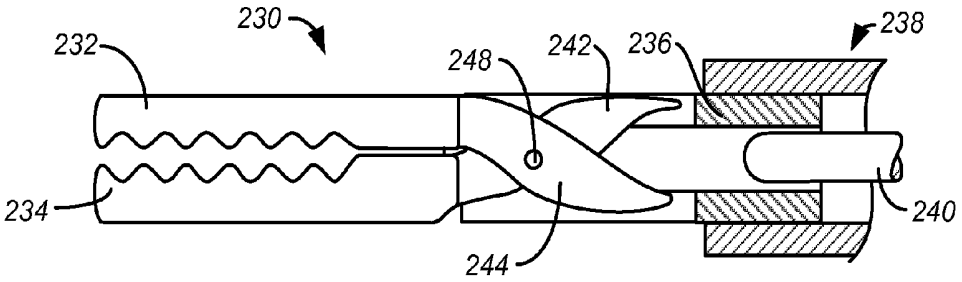

FIG. 15B

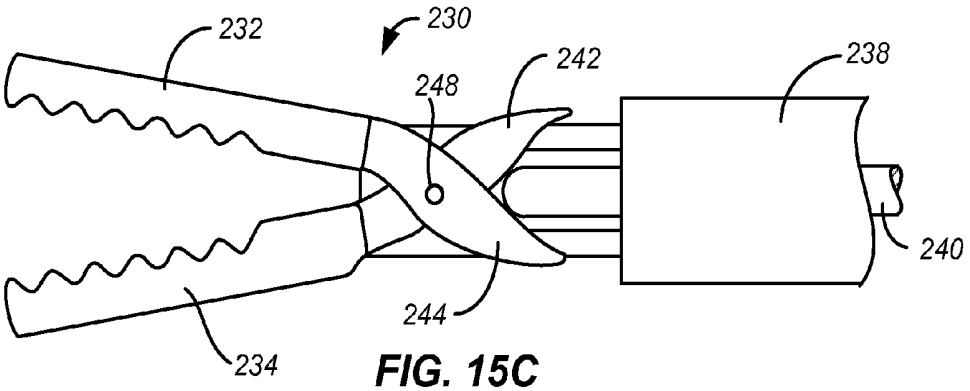

FIG. 15C

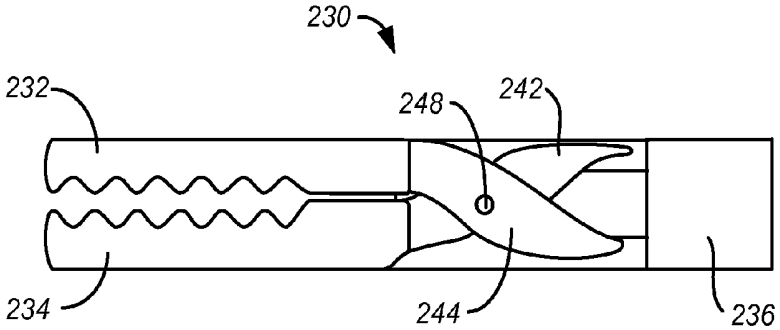

FIG. 15D

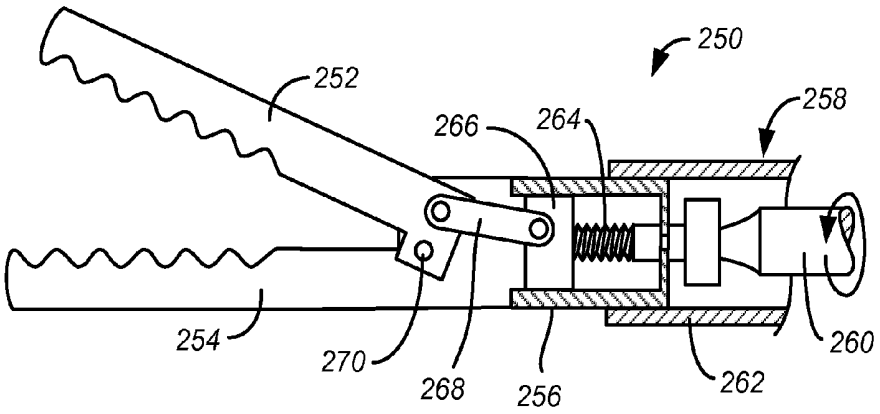

FIG. 16A

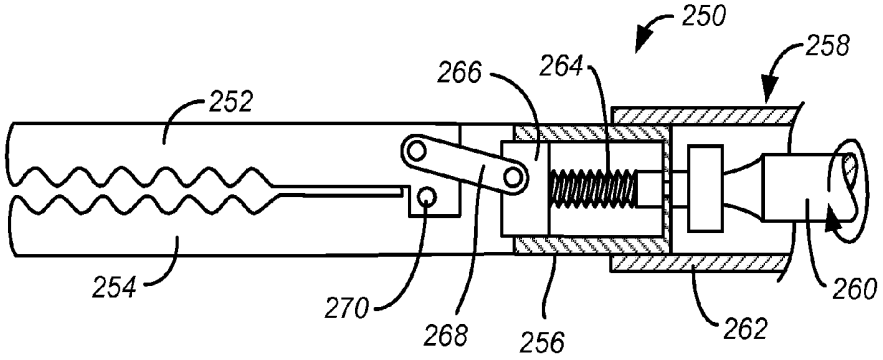

FIG. 16B

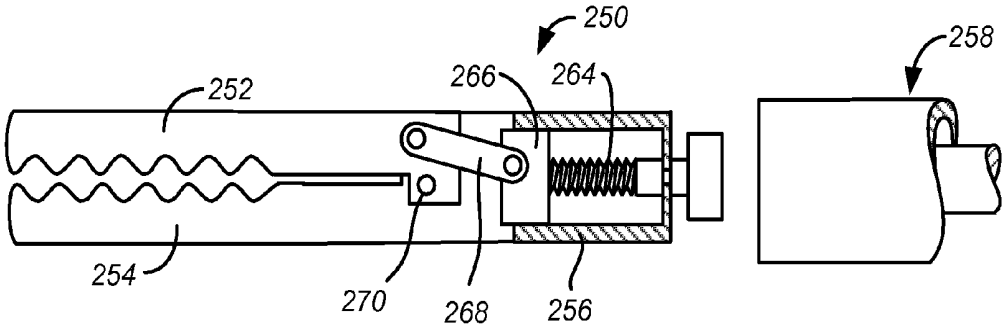

FIG. 16C

METHODS AND SYSTEMS FOR MAGNETICALLY SUSPENDING TISSUE STRUCTURES

CROSS-REFERENCE TO RELATED APPLICATIONS

This application is a continuation of U.S. patent application Ser. No. 14/030,581, filed Sep. 18, 2013, which claims the benefit of U.S. Provisional Application No. 61/770,159, filed on Feb. 27, 2013, the full disclosures of which are incorporated herein by reference.

BACKGROUND OF THE INVENTION

1. Field of the Invention

The present invention relates generally to medical devices and methods. More particularly, the present invention relates to methods and systems for magnetically suspending tissue structures during minimally invasive surgical procedures.

A number of surgical procedures which previously required open surgery are now performed by laparoscopy and other minimally invasive procedures. In laparoscopic procedures, a camera and a number of tools are introduced into a body cavity through ports or other passages formed through the patient's skin. In many procedures, the abdomen is insufflated and several ports are placed through the patient's abdominal wall. The camera is introduced through one of the ports, and the remaining ports are used for introducing tools needed to manipulate internal tissue structures and to remove, oblate, cauterize, cut, or otherwise modify these tissue structures.

One limitation of such laparoscopic and other minimally invasive procedures is the limited number of ports available at any one time to accommodate the tools required to perform the procedures. In order to reduce the number of needed ports, it has been proposed to use external magnets to suspend and position organs. The magnets could thus perform the role of a tissue grasper without the need to utilize one of the available access ports. For example, a magnetic element may be introduced into the body cavity through a port or otherwise. The magnetic element will be coupled to a target organ and an external magnet used to attract and position the magnetic element in order to in turn position the organ as needed for the procedure. Several specific systems for magnetically suspending organs and tissue structures are described in the references identified below in the Description of the Background Art.

Although quite promising, such magnetic tissue suspending systems have typically been cumbersome to deploy, difficult to reposition during a procedure, and difficult to release and remove after the procedure is over. It is an object of the present invention to overcome at least some of these deficiencies.

2. Description of the Background Art

U.S. Patent Publ. Nos. 2010/0204727; 2009/0043246; 20120088965; and 20120238796 and PCT Publication WO2009/019288 describe magnetic tissue suspension systems useful in laparoscopic procedures. U.S. Pat. No. 7,169,104 describes a magnetic tissue suspension system useful in endoscopic procedures. U.S. Pat. No. 7,766,810; U.S. Patent Publ. 2008/0171907; and WO2008/089049 describe systems for filling an organ with a magnetic material and thereafter magnetically manipulating the organ.

SUMMARY OF THE INVENTION

The present invention provides improved methods and systems for magnetically suspending and manipulating tissue

structures during laparoscopy and other minimally invasive surgical procedures. The methods and systems provide a simplified and efficient protocol for introducing a tissue grasper attached to a magnetic element into a body cavity through a laparoscopic port or other tissue passage. The tissue grasper, magnetic element, and an adjustable tether connecting them together, are introduced simultaneously through the laparoscopic port or other tissue passage using a single shaft. After releasing the magnetic element from the shaft, the shaft is used to position the tissue grasper adjacent to the target tissue structure. The tissue grasper is then opened, placed over the tissue structure, and closed to firmly grasp the tissue structure. The tissue grasper is then released from the single shaft and the shaft removed from the body cavity. A conventional or other laparoscopic grasper is then introduced into the body cavity to grasp the magnetic element and position the magnetic element adjacent to an external magnet which attracts the magnetic element and allows positioning the element by moving the external magnet over the patient's skin. The laparoscopic grasper can also be used to tighten or cinch the tether by pulling on the tether which locks in place after appropriate tensioning.

A particular object of the present invention is to provide variable control of the magnetic field which is created between the magnetic coupling element within the body cavity and the external suspension magnet present over the patient's skin. While the use of fixed magnets and/or magnetic materials which are not themselves magnets comes within the scope of the present invention, it will be preferable if at least one of the magnetic coupling element and the external suspension magnet is configured to provide an adjustable magnetic field. The most common magnets having adjustable field strength are electromagnets, which typically comprise a wound helical coil of wire, usually having an iron core. When current flows through the helical coil, the iron core acts as a magnet, where the strength and polarity of the magnetic field created are adjustable by changing the magnitude of and/or the direction of current flow through the wire. A variety of conventional circuits are available for coupling to an electromagnet to provide a variable, adjustable magnetic field.

While usually at least one of the magnetic coupling element and the external suspension magnet will have an adjustable magnetic field, the other magnetic element may be a permanent magnet or a temporary magnet. Permanent magnets are those which retain a generally fixed level of magnetism over time and which are typically made of permanently magnetizable materials, such as neodymium-iron-boron alloys, samarium-cobalt alloys, alnico alloys, as well as ceramic and ferrite materials. Temporary magnets are typically made from iron and other ferrite materials.

While using an electromagnet or other magnet having an adjustable field as the external suspension magnet will be most common, it will also be possible to use an electromagnet or other adjustable field magnet as the magnetic coupling element within the body cavity. In some cases, it will be desirable to form both the external suspension magnet and the magnetic coupling element as electromagnets or other adjustable field strength magnets. It will be appreciated that by having both the external suspension magnet and the internal magnetic coupling element be capable of providing an adjustable magnetic field, the magnetic traction between these magnetic elements can be adjustable over a wide range of field strengths. The ability to adjust the field strength is desirable for many reasons. For example, the strength may be adjusted when it is desirable to move the external suspension magnet over the patient's body surface in order to pull or drag the

internally located magnetic coupling element. It will also be desirable to be able to adjust the magnetic field strength at different portions of the surgical procedure. A strong magnetic field may be necessary at times that significant tension is being placed on the tether. At other times, however, it may be desirable to reduce the magnetic strength between the magnetic coupling element and the external suspension magnet, for example in order to lessen the compressive force being applied to the tissue in order to reduce the inhibition of blood circulation over extended time periods. The electromagnet will usually include a controller unit, and the controller unit will usually be adjustable or programmable for one or more purposes. For example, software may be provided to determine or calculate the optimal magnetic force to accommodate an abdominal thickness, tool size, supporting force, or the like, and to calculate the desired holding force and the electrical power needed to generate the desired force.

In a first aspect of the present invention, a tissue suspension system comprises a grasper placement tool having a shaft, a tissue grasper, a magnetic coupling element, and a tether securing the magnetic coupling element to the tissue grasper. The tissue grasper is detachably secured to a distal end of the shaft, allowing the tissue grasper to be released once it has been secured to a target tissue structure. Such a release mechanism eliminates the need to provide a separate tool to remove and place the tissue grasper as required by several of the proposed system.

In a preferred aspect, the grasper placement tool has a rigid narrow shaft configured for laparoscopic introduction into a patient's insufflated abdomen. Typically, the shaft will have a diameter intended for insertion through a convention laparoscopic port, e.g. having a diameter of 5 mm, 10 mm, or 12 mm. The tissue grasper may be secured to the shaft of the grasper placement tool by any suitable mechanical attachment mechanism, typically being a bayonet attachment which can be released via a mechanism located at a proximal end of the shaft. The tissue grasper typically includes a pair of clamping jaws which can be opened and closed from the proximal end of the shaft. The tissue grasper is specifically configured to be closed over the tissue structure while the tissue grasper remains attached to the shaft. The tissue grasper is further preferably configured to remain closed over the tissue even after being detached from the shaft.

In specific embodiments of the present invention, the jaws of the tissue grasper will be attached to a rod which can be moved in order to open and close the jaws. Typically, the tissue grasper placement tool includes a driver which engages the rod of the tissue grasper allowing the rod to be reciprocated in order to open and close the jaws while the tissue grasper remains on the shaft.

In further specific embodiments, the magnetic coupling element will be configured so that it can be carried by the jaws when the grasper placement tool is being introduced into the body cavity. In such configuration, the magnetic element, the tissue grasper, and the shaft of the tissue grasper placement tool will preferably be coaxially aligned in order to minimize the profile and allow the assembly to be introduced through a laparoscopic or other port simultaneously in a single motion. That is, the tissue grasper will have an axis which is aligned with an axis of the shaft and usually with an axis of the magnetic element. This allows the shaft, tissue grasper, and magnetic element to be inserted together in tandem through the laparoscopic port of other access passage.

The length of tether between the tissue grasper and the magnetic element is preferably adjustable. For example, the tether may be configured to be pulled through the magnetic coupling element and to be selectively locked once a proper tension on the tissue structure has been achieved. A variety of suitable locking mechanisms may be provided on the magnetic element, including mechanically actuable locking mechanisms and magnetically actuable locking mechanisms. In some embodiments, as a safety measure, the locking mechanism can be configured to allow the tether to slip when excessive tension is applied.

The assembly of the tissue grasper placement tool, magnetic element, and tether, as just described, will usually be combined in a system that further includes the external magnet and optionally a frame, arm or other support structure for holding the external magnet in place during a procedure. Such support structures will typically be configured to be secured to a table and they may optionally include a shape lock mechanism for facilitating repositioning.

In a second aspect, the present invention comprises a method for supporting an internal tissue structure using an external magnet. A shaft is introduced through a percutaneous passage, such as a laparoscopic port, into a body cavity of a patient, such as an insufflated abdomen. A distal end of the shaft carries a tissue grasper and a magnetic coupling element. The tissue grasper is secured to the magnetic coupling element by a tether. The magnetic coupling element is released from the shaft within the cavity while maintaining connected to the grasper by the tether. The tissue grasper is then secured over the tissue structure while the grasper remains on the shaft. Usually, a driver or other mechanism in the shaft is used to lock the grasper in the required gripped position. The tissue grasper is then released from the shaft after having been secured over the tissue structure. The external magnet is then positioned over the patient's skin to attract and hold the magnetic coupling element in place. The tether is then cinched to position the tissue structure as desired.

The shaft, tissue grasper, and magnetic coupling element are usually aligned in tandem as they are introduced through the percutaneous passage. Such an aligned configuration simplifies the introduction of these three system components, significantly reducing the complexity of the procedure. Typically, the magnetic coupling element is carried by the tissue grasper while being introduced through the port of other tissue passage, and the magnetic coupling element can be released by simply opening the tissue grasper.

The tissue grasper typically comprises opposed jaws, and securing the tissue grasper over the tissue comprises closing the jaws over the tissue where the jaws remain closed after the tissue grasper has been released from the shaft. In specific embodiments, closing the jaws over the tissue structure comprises actuating a driver in the shaft to cause the jaws to close where the jaws remain closed after such actuation stops.

Releasing the tissue grasper from the shaft typically comprises actuating a coupling mechanism, such as a bayonet connector, on the shaft, to release the tissue grasper. The methods may further comprise positioning the external magnet using a supporting structure, such as support arm attached to the patient bed or operating table. Cinching the tether may comprise grasping the tether and pulling the tether through a lock on at least one of the magnetic coupling element in the tissue grasper. The methods may further comprise releasing the tissue grasper from the tissue structure after the procedure has been completed.

INCORPORATION BY REFERENCE

All publications, patents, and patent applications mentioned in this specification are herein incorporated by reference to the same extent as if each individual publication,

patent, or patent application was specifically and individually indicated to be incorporated by reference.

BRIEF DESCRIPTION OF THE DRAWINGS

The novel features of the invention are set forth with particularity in the appended claims. A better understanding of the features and advantages of the present invention will be obtained by reference to the following detailed description that sets forth illustrative embodiments, in which the principles of the invention are utilized, and the accompanying drawings of which:

FIG. **1** illustrates the grasper placement tool connected to a tissue grasper and a magnetic element in accordance with the principles of the present invention.

FIGS. **2**A and **2**B are detailed end views of the grasper placement tool of FIG. **1** shown with the tissue grasper holding the magnetic element (FIG. **2**A) and with the tissue grasper open (FIG. **2**B).

FIG. **3** is a cross-sectional view of the grasper placement tool of FIG. **1** shown without the tissue grasper.

FIG. **4**A is a detailed, end view of the grasper placement tool shown with a bayonet connector holding the tissue grasper in place.

FIG. **4**B is a detailed, end view of the grasper placement tool shown with the jaws of the tissue grasper open.

FIG. **4**C is a detailed, end view of the grasper placement tool of the present invention shown with the tissue grasper detached from the bayonet connector.

FIGS. **5**A-**5**F illustrate a first exemplary embodiment of a tissue grasper constructed in accordance with the principles of the present invention.

FIGS. **5**G-**5**I illustrate a second exemplary embodiment of a tissue grasper constructed in accordance with the principles of the present invention.

FIGS. **6**A and **6**B illustrate a third exemplary embodiment of a tissue grasper constructed in accordance with the principles of the present invention.

FIGS. **7**A-**7**C illustrate a fourth embodiment of a tissue grasper constructed in accordance with the principles of the present invention.

FIGS. **8**A and **8**B illustrate a first embodiment of an exemplary magnetic element constructed in accordance with the principles of the present invention.

FIGS. **9**A and **9**B illustrate a second exemplary embodiment of a magnetic element constructed in accordance with the principles of the present invention.

FIGS. **10**A and **10**B illustrate a third exemplary embodiment of a magnetic element constructed in accordance with the principles of the present invention.

FIG. **10**C illustrates an electromagnetic element useful in the magnetic element embodiments of the present invention.

FIGS. **11**A-**11**I illustrate the grasper placement tool of the present invention used for positioning a tissue grasper and magnetically suspending it in accordance with an exemplary embodiment of the methods of the present invention.

FIGS. **12**A and **12**B illustrate an exemplary external magnet constructed in accordance with the principles of the present invention.

FIGS. **13**A and **13**B illustrate the external magnet being supported by a shape-lock arm in accordance with the principles of the present invention.

FIGS. **14**A-**14**D illustrate a fourth exemplary embodiment of a tissue grasper constructed in accordance with the principles of the present invention.

FIGS. **15**A-**15**D illustrate a fifth exemplary embodiment of a tissue grasper constructed in accordance with the principles of the present invention.

FIGS. **16**A-**16**C illustrate a sixth exemplary embodiment of a tissue grasper constructed in accordance with the principles of the present invention.

DETAILED DESCRIPTION OF THE INVENTION

Referring to FIG. **1**, a tissue grasper placement tool **10** includes a shaft **12** which carries a tissue grasper **14** at its distal end. A magnetic element **16** is secured to the tissue grasper **14** by a tether **18**. A handle **20** at the proximal end of shaft **12** includes a trigger **22** which is used for opening and closing the oppose jaws **34** and **36** and also for detaching the tissue grasper **14** from the shaft **12**, as will be described in more detail below. A detachment sleeve **23** on shaft **12** is also provided to detach the tissue grasper **14**, and a rotatable knob **24** is provided at the proximal end of a driver **28** (FIGS. **2**A, **2**B and **3**) and is used to lock the opposed jaws **34** and **36** of the tissue grasper **14** in place in any desired position, as will also be described in more detail below.

Referring now to FIGS. **2**A and **2**B, the tissue grasper **14** will preferably hold the magnetic element **16** between the opposed jaws **34** and **36**, as shown in FIG. **2**A, while the tool end is being introduced into a target body cavity through a laparoscopic port or other tissue passage. Once in place, the jaws **34** and **36** may opened, as shown in FIG. **2**B, to release the magnetic element **16**. In the open configuration of FIG. **2**B, the jaws **34** and **36** of tissue grasper **14** will also be in position to engage and be tightened over a target tissue structure, as will be described in more detail below.

Referring now to FIG. **3**, a bayonet connector **26** used for detachably securing the tissue grasper **14** in the position shown in FIG. **1**. The bayonet connector may be of generally conventional construction, including one or a pair of detents **27** which are received in opposed apertures **32** (FIG. **4**A) in a shank region of the tissue grasper **14**. The shaft **12** is axially split into a pair of opposed prongs **30** which may be squeezed together in order to release the detent pins **27** when it is desired to detach the tissue grasper **14** from the shaft. The grasper release mechanism **23** allows the user to close the prongs and the trigger **22** can be used to advance the driver **28** to push the grasper off of the bayonet connector. As shown in FIG. **3**, the trigger **22** may be pulled (as shown in broken line) to advance a distal end **40** of the driver **28** (as also shown in broken line).

Referring now to FIG. **4**B, the rotatable knob **24** may be used to rotate driver **28** (as shown by an arrow) in order to lock the opposed jaws **34** and **36**, as will be described in greater detail below.

FIG. **4**C illustrates the tissue grasper **14** after the jaws have been closed and the grasper released from the bayonet connector **26**.

Referring now to FIGS. **5**A-**5**F, a first exemplary tissue grasper **114** will be described. The tissue grasper **114** comprises an upper jaw **134** pivotally attached to a lower jaw **136** and having a shank region **152** at a proximal end thereof. Although not illustrated in FIGS. **5**A-**5**F, the bayonet connector **26** of the shaft **30** of the grasper placement tool **10** will be received within the open end of the shank and will engage apertures (as described previously for detachably securing the tissue grasper **114**). The distal end **40** of the driver **28** will be configured to engage a proximal end (to the right in FIG. **5**A) of a piston **150** with a threaded proximal end **154**. The threaded end **154** is rotatably attached to a follower **151** secured to a link **156**. In this way, the driver **28** can be used to

rotate the piston between a locked configuration, as shown in FIG. **5**A, where the threads on the piston engage mating threads on an inner surface of the shank **152**, and an unlocked configuration as shown in FIG. **5**C, where the piston has been rotated 180 degrees so that the threads no longer engage each other. In the unlocked configuration of FIGS. **5**C and **5**D, the driver **28** may be used to advance the piston distally to close the upper jaw **134**, as shown in FIG. **5**E. The piston **150** may then be rotated back to the position of FIG. **5**A and FIG. **5**B in order to lock the jaw closed if desired. Otherwise, a spring **160** may be configured to self-open the jaws when the piston is free to translate and no force is applied to piston by the driver **28**. Optionally, a portion **162** of the shank **152** may be pivotally attached so that the portion may be opened to disengage the piston whenever desired, allowing the jaws to open.

In variations of the grasper **114** of FIGS. **5**A-**5**F, the shank **152** may be replaced by a cylinder with a full internal thread. The follower **151** and the threaded end **154** of the piston **150** remain rotatably coupled, and a hex or other driver can be temporarily engaged with the shank **152** and piston **150** to rotate the threaded end **154** to translate the piston distally and proximally within the shank to open and close the jaws **134** and **136**. When the piston **150** is fully distally advanced against the follower, the jaws will remain locked until the driver is re-engaged to drive the piston **150** proximally to release the jaws.

Referring now to FIGS. **5**G-**5**I, a second exemplary tissue grasper **164** will be described. The tissue grasper **164** comprises an upper jaw **166** pivotally attached to a lower jaw **168** and having a shank region **170** at a proximal end thereof. The shank region **170** is detachably received in an open end of the shaft **12** of the previously illustrated tissue grasper placement tool **10**. A distal end **172** of a hex driver shaft **174** is configured to pass through a complementary hexagonal axial passage through a threaded piston **176** having a protruding distal end **178**. A follower **180** is pivotally attached to one end of a link **182** which is pivotally attached at its other end to the upper jaw **166**. In this way, the hex driver **174** can be passed through the passage in the follower **180** to engage a proximal end of the follower to close the upper jaw **166** as shown in FIG. **5**H. Once the jaws have been closed over a target tissue T, the hex driver **174** can be rotated to drive the threaded piston **176** forward to lock the jaws over the tissue. As with earlier embodiments, a spring **184** is provided to hold the jaws **166** and **168** open, as shown in FIG. **5**G, when the follower **180** is proximally retracted. When it is desired to release the jaws, the hex driver **174** and shaft **12** may be re-engaged with the shank **170** and the hex driver used to rotate the threaded piston **176** to release the force against the follower **174**, allowing the spring **184** to open the jaws.

Referring now to FIGS. **6**A and **6**B, an alternative tissue grasper **214** is illustrated. A piston **350** is attached through a link **356**, and the opening/closing mechanism is similar to that described relative to FIGS. **5**A-**5**F. The piston **350**, however, is not rotatable and the only means for locking and unlocking the axial translation of the piston is a pivoting wall **362**. Thus, the piston **350** is locked as shown in FIG. **6**A and is unlocked as shown in FIG. **6**B.

A second alternatively designed tissue grasper **314** is illustrated in FIGS. **7**A-**7**C. Piston **350** is free to axially translate in either a proximal or distal direction within shank **352**. The upper jaw **334** is locked relative to the lower jaw **336** by a curved ratchet strip **370** which can be opened as shown in FIG. **7**B or closed as shown in FIG. **7**C in order to permit or prevent opening and closing of the jaws.

Referring now to FIGS. **8**A and **8**B, a first exemplary embodiment of a magnetic coupling element **416** is illustrated. The tether **18** passes at a 90 degree angle from one corner of the magnetic element to an opposed corner. A magnetic shuttle **450** can be moved from an open configuration, as shown in FIG. **8**A, where the tether **18** is free to move through the magnetic element **416** to a closed configuration, as shown in FIG. **8**B, where the tether **18** is locked relative to the magnetic element. The magnetic shuttle **450** may be actuated, for example, when the magnetic element **416** is being held by the external magnet which will draw the magnetic shuttle **450** into the locked configuration as shown in FIG. **8**B. This configuration is particularly convenient since no separate action is needed to lock and unlock the tether. By properly orienting surface features **452**, the tether **18** may be drawn in a cinching or tightening direction even when the shuttle is closed, but prevented from moving in the opposite direction since the features **452** will cut or bite into the tether if it moves in the opposite direction.

Referring now to FIGS. **9**A and **9**B, an alternative magnetic element **516** is illustrated where tether **18** passes through an open passage **550**. Once the tether is sufficiently tight, a locking element **560** can be moved against the body of the magnetic element **516**, shown in FIG. **9**B in order to prevent the tether **18** from being pulled out of the passage **550**. The locking element **560** can be a conventional spring lock with a button **562** available to release the lock.

Referring now to FIGS. **10**A and **10**B, a second alternative magnetic element **616** is illustrated. The tether has a ratcheted section **618** which travels past a pivoted element **620**. The pivotable element **620** carries a tooth **622** which engages the ratchets **618** to prevent the tether from being drawn out of the magnetic element. The tether, however, may be tightened as the ratchet will travel over the tooth **622** in that direction only. A torsion or other spring element (not illustrated) is usually provided to urge the pivotable element **620** in a clockwise rotational direction against the ratcheted section **618** of the tether, as viewed in FIGS. **10**A and **10**B.

In all embodiments described thus far, the magnetic element may comprise an electromagnet as illustrated in FIG. **10**C. An electromagnetic element **700** may comprise a wire coil **702** wound over a coil **704** mounted within a housing **706**. Current is typically provided by an external power supply **708** connected to the electromagnetic element by a conductor cable **710** or in some cases by a radiofrequency link. The power supply will include conventional circuitry to allow the magnetic field strength to be adjusted by the user, typically using a knob **712** or other convention manual controller connected to the power supply by a second cable **714**. As described elsewhere herein, the ability to adjust the magnetic field strength of both the external magnet and the internal magnetic element affords a great deal of flexibility to the user.

Referring now to FIGS. **11**A-**11**I, a method for magnetically suspending a tissue structure in a body cavity in accordance with the principles of the present invention will be described. The description will be made with respect to a tissue structure TS in an insufflated abdominal cavity A in a laparoscopic procedure, but the principles of the present invention will apply to other endoscopic and minimally invasive procedures and other body cavities as well. For ease of illustration, the presence of laparoscopic ports has not been shown, and in fact the tools of the present invention could be used without laparoscopic ports in some instances. Usually, however, the procedures would employ one or more conventional laparoscopic ports for providing tool access.

As shown in FIG. **11**A, the grasper replacement tool **10** is introduced into the abdominal cavity A with the magnetic

element **16** carried in the tissue grasper **14** which in turn is attached to the distal end of the shaft **12**. By having these components axially aligned, the profile of the tool is minimized and the simultaneous introduction of all components is facilitated.

Once in the cavity, the jaws of the tissue grasper **14** (e.g. jaws **34** and **36** in FIG. **1**) will be slightly opened to release the magnetic element **16**, as shown in FIG. **11**B. Any of the release mechanisms described above could be employed. The tissue grasper **14** is then moved to engage the tissue structure TS, and the jaws of the tissue grasper are tightened over the tissue structure, as shown in FIG. **11**C, thus providing a firm grasp on the tissue structure.

The tissue grasper **14** is then detached from the shaft **12** of the grasper placement tool **10**, as shown in FIG. **11**D. Any of the detachment mechanisms described above could be utilized. The grasper placement tool **10** is no longer used in this procedure for suspending the tissue structure, but it could be used for removing the tissue grasper **14** by performing the steps that are now being described in an opposite order.

Referring now to FIG. **11**E, a conventional laparoscopic grasper LG is next introduced into the abdominal cavity, optionally through the same port or tissue passage through which the grasper placement tool **10** has been passed. The jaws of the grasper LG are then used to grasp the magnetic coupling element **16**, as shown in FIG. **11**F. The magnetic coupling element **16** is next raised to the vicinity of an external magnet **80** which has been placed on the outer surface of the patient's abdominal wall AW, as shown in FIG. **11**G. The strength of the magnetic field applied by the external magnet **80** may optionally be increased at this point in order to hold the coupling element **16** firmly as the tether **18** is cinched, as shown in FIG. **11**H. The tether **18** may be cinched by using the jaws of grasper LG to grasp the free end of the tether and pull on said free end in order to tension the portion of tether **18** between the tissue grasper **14** and magnetic element **16**, as shown in FIG. **11**H. Once the proper tension has been applied, as shown in FIG. **11**I, the grasper LG can be released from the magnetic coupling element **16**, and the physician is ready to continue with other portions of the procedure.

An exemplary external magnet **80** is illustrated in FIGS. **12**A and **12**B. The external magnet **80** preferably includes a side coupler **82** which permits attachment to a support arm, as described hereinafter. An electromagnet is formed by wrapping a solenoid or coil wire **84** over a magnetic core **86** in a conventional manner. Magnetic field controller **88** is provided and connected to an electrical cord **90** to provide power. Both a field strength adjustment knob **92** and a lock button **94** may be provided for unlocking the support frame **180**. An unlock button **96** may be provided for releasing the magnetic element **16**. Of particular use, the magnetic field strength may be adjusted using the knob **92** to an appropriate level to facilitate movement of the external magnet **80** over the patient's skin in when it is desired to move the magnetic element **16** within the body cavity in order to manipulate the tissue structure TS. Circuits for smoothly adjusting the strength of an electromagnet from zero to maximum are well known in the art. See, for example, the circuit descriptions available at http://homemadecircuitsandschematics.blogspot.com/.

Usually, the external magnet **80** will be held in place using a support frame **180**, as shown in FIGS. **13**A and **13**B. The support frame **180** may include a stand **182** which may be secured to the side of a bed or table T. An arm **184**, such as a shape lock mechanism, may be attached to an electronic lock **186** at the top of the stand **182**. The electronic lock may be in communication with the lock and unlock buttons **94** and **96** on the external magnet **80**, allowing the user to lock and unlock the arm while still holding the magnet. In this way, the external magnet **80** may be manually positioned over the patient P, and after the desired position is reached, the external magnet may be locked in place until it is desired to further move the magnet and the coupled tissue structure.

Referring now to FIGS. **14**A-**14**D, a fourth exemplary tissue grasper **200** will be described. The tissue grasper **200** comprises an upper jaw **202** to pivotally attach to a lower jaw **204** and having a shank region **206** at a proximal end thereof. A grasper placement tool assembly **208** comprises an inner tubular member **210**, an outer tubular member **212**, and a reciprocating pusher **214**. A retaining ring **216** is carried near a distal end of the outer tubular member and is adapted to be pushed forwardly over ratcheting surfaces **218** on the top and bottom of the upper jaw **202** and lower jaw **204**, respectively. As shown in FIG. **14**A, the upper jaw **202** and lower jaw **204** are held open by a spring **222** disposed about pivot member **220**. The shank **206** is held within the open end of the inner tubular member **210**, and pusher **214** may be advanced in a distal direction to engage a follower **226** attached to a link **224** which is configured to close the upper jaw **202** over the lower jaw **204**, as shown in FIG. **14**B.

In order to hold the closed jaws together, the outer tubular member **212** may be advanced distally to push the retaining ring **216** over the ratcheting surfaces **218** of the upper and lower jaws, as shown in FIG. **14**C. The jaws will be closed and the ratcheting ring **216** advanced after the tissue grasper **200** has been secured onto a desired tissue target site. The grasper placement tool assembly **208** may then be withdrawn from the closed tissue grasper **200**, as shown in FIG. **14**D.

Referring now to FIGS. **15**A-**15**D, a fifth alternative exemplary tissue grasper **230** will be described. The tissue grasper **230** includes an upper jaw **232** pivotally attached to a lower jaw **234** and having a shank region **236** at its proximal end. A grasper placement tool **238** comprises a tubular body having a reciprocating pusher **240** mounted therein. The shank region **236** of the tissue grasper **230** is detachably received in an open end of the tubular body of the grasper placement tool **238**. The upper jaw **232** is attached to scissor arm **244** and the lower jaw **234** is attached to a scissor arm **242**. The scissor arms are mounted in an opening **246** formed in a distal region of the shank and attached by a pivot pin **248**. The scissor arms **242** and **244** are configured so that advancement of the pusher **240** can open the jaws as will be described below.

The upper jaw **232** and lower jaw **234** are normally held in their closed position, as shown in FIGS. **15**A and **15**B, by a spring element (not shown). In order to open the jaws, the pusher **40** is advanced to spread the interior ends of the scissor arms **242** and **244**, as shown in FIG. **15**C. So long as the pusher arm remains advanced, the jaws will remain open, allowing them to be placed over a tissue structure by proper manipulation of the grasper placement tool **238**. When the target tissue is properly between the jaws, the pusher element **240** may be proximally retracted, allowing the spring element to close the jaws onto the tissue. Various further locking elements may be provided, such as a retaining ring as described previously.

Referring now to FIGS. **16**A-**16**C, a sixth exemplary tissue grasper **250** will be described. The tissue grasper **250** comprises an upper jaw **252** pivotally attached to a lower jaw **254** and having a shank region **256** at a proximal end thereof. The shank region **256** is carried in the open end of a grasper placement tool **258** having a tubular body. The grasper placement tool further includes a rotatable shaft **260** which is mounted within the tubular body **262**. The rotatable shaft **260** is coupled to a threaded shaft **264**, and a threaded follower rides over the threaded shaft so that rotation of the threaded

shaft translates the follower proximally and distally. In its distal-most configuration, the follower **266** causes an attached link **268** to close the upper jaw which is mounted on pivot pin **270**. By rotating the rotatable shaft **260** in the opposite direction, the threaded shaft draws the follower **266** in a proximal direction in order to open the upper jaw **252**, as best seen in FIG. **16**A. One advantage of the rotation drive mechanism is that no springs are required and the jaws **252** and **254** will be held in place by the friction of the threaded shaft **264** and follower **266**. Another advantage of the rotation mechanism is that rotatable shaft **260** can be linked and rotated by a servo motor (not illustrated) which makes this mechanism ideal for use in robotic surgery. This provides for a very tight grasp of tissue. The grasper placement tool **258** may be removed from the tissue grasper **250** after the jaws have been closed over tissue, as shown in FIG. **16**C. The jaws may then be removed by recoupling the grasper placement tool **258** in order to rotate the rotatable shaft **260** in the opposite direction in order to open the jaws and release them from the tissue.

While preferred embodiments of the present invention have been shown and described herein, it will be obvious to those skilled in the art that such embodiments are provided by way of example only. Numerous variations, changes, and substitutions will now occur to those skilled in the art without departing from the invention. It should be understood that various alternatives to the embodiments of the invention described herein may be employed in practicing the invention. It is intended that the following claims define the scope of the invention and that methods and structures within the scope of these claims and their equivalents be covered thereby.

What is claimed is:

1. A tissue suspension system comprising:

a grasper placement tool having a shaft with a distal end and a driver,

a tissue grasper detachably secured to the distal end of the shaft, wherein the tissue grasper includes a pair of pivotally attached clamping jaws, a lockable piston and a link which drivably connects the piston to one of the jaws, wherein the driver of the grasper placement tool is configured to axially translate the piston to open and close the jaws via the link and to lock and unlock the piston so that the tissue grasper can be closed over tissue and remain closed over tissue after being detached from the grasper placement tool, wherein the lockable piston comprises external threads which selectively engage internal threads on an internal surface of a shank portion of the tissue grasper, wherein the shank portion is configured to be opened and closed to disengage and engage the external and internal threads;

a magnetic coupling element;

a tether securing the magnetic coupling element to the tissue grasper; and

an external suspension magnet, wherein at least one of the magnetic coupling element and the external suspension magnet is configured to provide an adjustable magnetic field, wherein both the external suspension magnet and the magnetic coupling element are configured to provide an adjustable magnetic field.

2. A system as in claim **1**, wherein the shaft of the grasper placement tool comprises a rigid narrow shaft configured for laparoscopic introduction to a patient's abdomen.

3. A system as in claim **2**, wherein the tissue grasper is secured to the shaft by a bayonet attachment which can be released from a proximal end of the shaft.

4. A system as in claim **1**, wherein the magnetic coupling element is configured to be carried by the jaws when closed and to be released by opening the jaws while the tissue grasper remains attached to the distal end of the shaft.

5. A system as in claim **1**, wherein the tissue grasper has an axis which is aligned with an axis of the shaft so that the tissue grasper and the shaft may be inserted together in tandem through a laparoscopic access passage.

6. A system as in claim **5**, wherein the magnetic coupling element has an axis which is aligned with the axes of the shaft and of the tissue grasper so that the magnetic coupling element, the tissue grasper, and the shaft may be inserted together in tandem through the laparoscopic access passage.

7. A system as in claim **1**, wherein the length of the tether between the tissue grasper and the magnetic element is adjustable.

8. A system as in claim **7**, wherein the tether is configured to be pulled through the magnetic coupling element and selectively locked with a locking mechanism on the magnetic coupling element.

9. A system as in claim **8**, wherein the locking mechanism is mechanically actuable.

10. A system as in claim **8**, wherein locking mechanism is magnetically actuable.

11. A system as in claim **8**, wherein locking mechanism allows the tether to slip if excess tension is applied.

12. A system as in claim **1**, wherein the external suspension magnet includes a coupler for removable attachment to a support arm.

13. A system as in claim **12**, further comprising a support arm adapted to be secured to a table.

14. A system as in claim **13**, wherein the support arm comprises a shape lock mechanism.

15. A system as in claim **1**, wherein the external threads are configured to be rotated by the driver into and out of engagement with the internal threads.

* * * * *

专利名称(译)	用于磁悬浮组织结构的方法和系统		
公开(公告)号	US9078687	公开(公告)日	2015-07-14
申请号	US14/055193	申请日	2013-10-16
[标]申请(专利权)人(译)	MOHAMMADREZA ROHANINEJAD DBA中号REZA鲁哈尼个月天FACS		
申请(专利权)人(译)	MOHAMMADREZA ROHANINEJAD，DBA M. REZA鲁哈尼，医学博士，流式细胞仪		
当前申请(专利权)人(译)	ROHANINEJAD，MOHAMMADREZA		
[标]发明人	ROHANINEJAD MOHAMMADREZA MIRNAJAFI SEYED ALI ROHANINEJAD MOSTAFA ROHANINEJAD MORTEZA		
发明人	ROHANINEJAD, MOHAMMADREZA MIRNAJAFI, SEYED ALI ROHANINEJAD, MOSTAFA ROHANINEJAD, MORTEZA		
IPC分类号	A61B17/29 A61B17/122 A61B17/28 A61B19/00 A61B17/00		
CPC分类号	A61B17/29 A61B17/122 A61B17/282 A61B17/2833 A61B2017/00283 A61B2017/00818 A61B2017/00876 A61B2019/2253 A61B17/1227 A61B17/1285 A61B34/73 A61B2017/00473 A61B2017/2931 A61B2017/2946		
代理机构(译)	WILSON SONSINI盈丰＆ROSATI		
审查员(译)	MCEVOY，THOMAS		
优先权	61/770159 2013-02-27 US		
其他公开文献	US20140243587A1		
外部链接	Espacenet USPTO		

摘要(译)
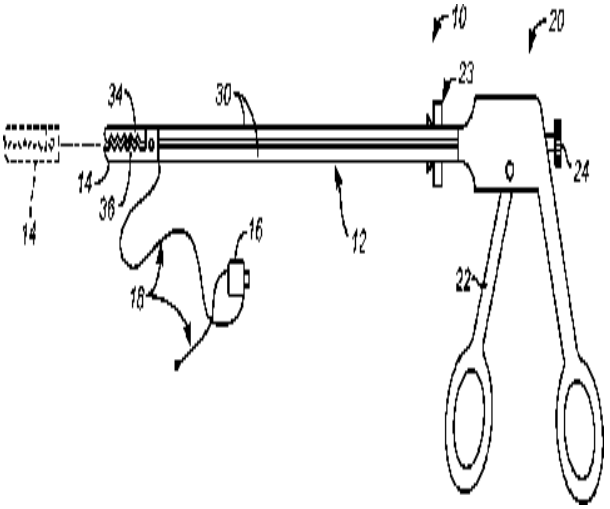
一种用于磁悬浮组织的系统包括抓紧器放置工具，组织抓紧器，磁耦合元件和将磁耦合元件固定到组织抓紧器的系绳。抓紧器放置工具用于同时将组织抓紧器和磁耦合元件引入体腔。然后，抓紧器释放磁耦合元件并接合目标组织结构。然后将组织抓紧器从放置工具上拆下，并使用传统的腹腔镜或其它抓紧器将磁耦合元件接合到外部磁体。