US 20100016883A1

(19) United States

(12) Patent Application Publication

Christoudias

(10) Pub. No.: US 2010/0016883 A1

(43) Pub. Date: Jan. 21, 2010

(54) **DOUBLE GRASPER AND TRIGGER CONTROL MECHANISM**

(76) Inventor: **George C. Christoudias**, Teaneck, NJ (US)

Correspondence Address:
RICHARD A. JOEL ESQ.
496 KINDERKAMACK ROAD
ORADELL, NJ 07649 (US)

(21) Appl. No.: **12/175,943**

(22) Filed: **Jul. 18, 2008**

Publication Classification

(51) **Int. Cl.**
A61B 17/00 (2006.01)
A61B 1/00 (2006.01)

(52) **U.S. Cl.** **606/205**; 600/118

(57) **ABSTRACT**

This invention comprises an instrument with a unique trigger mechanism for approximating any tissues that can physically reach each other during a performance of any laparoscopic procedure. The user friendly double grasper comprises an elongated cannula having visually coded jaws at one end which cooperate with an intermediate member. The visually coded jaws are connected to control means within the cannula which are coupled to tacile coded control triggers mounted to a longitudinal handle. Each trigger is spring loaded to passively close a particular jaw after manually opening the jaw. Both triggers may be operated individually or simultaneously with the same operating digit. The triggers include a dimple on one trigger and a bubble on the other trigger so that an operator may recognize which trigger corresponds to which jaw and thus control the jaws by feel. The jaws are also coded for visual recognition with different color or letter.

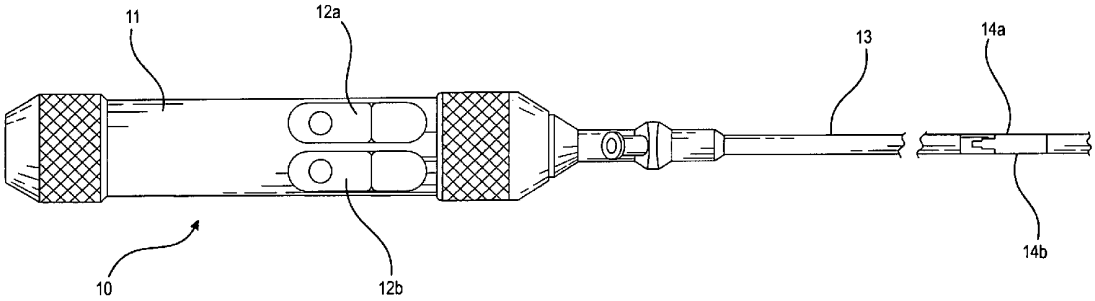

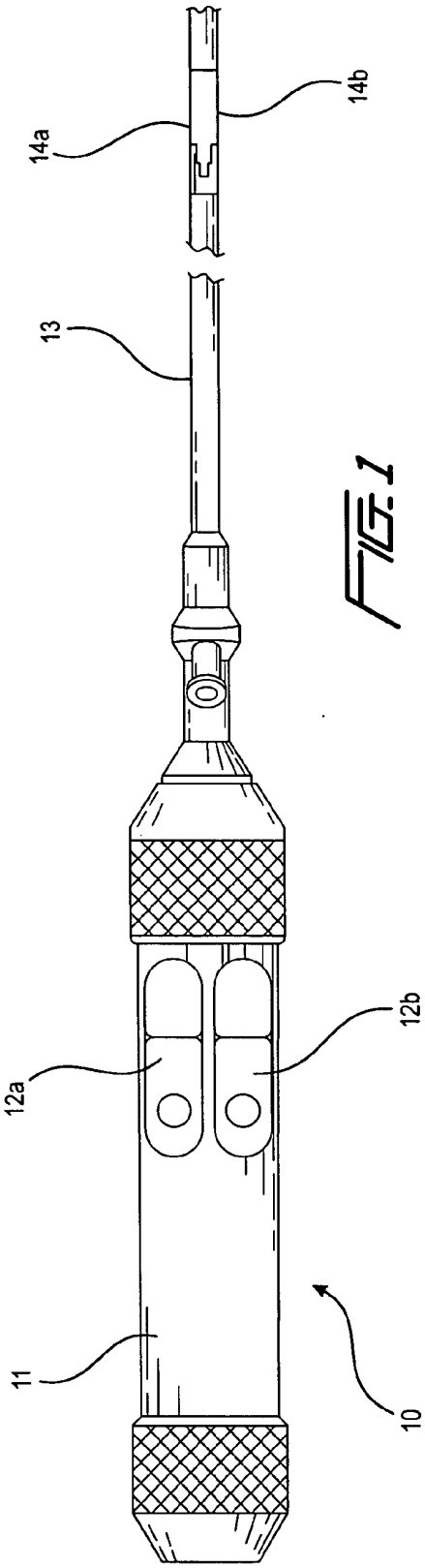
14a
14b
13
12a
12b
11
10

FIG. 1

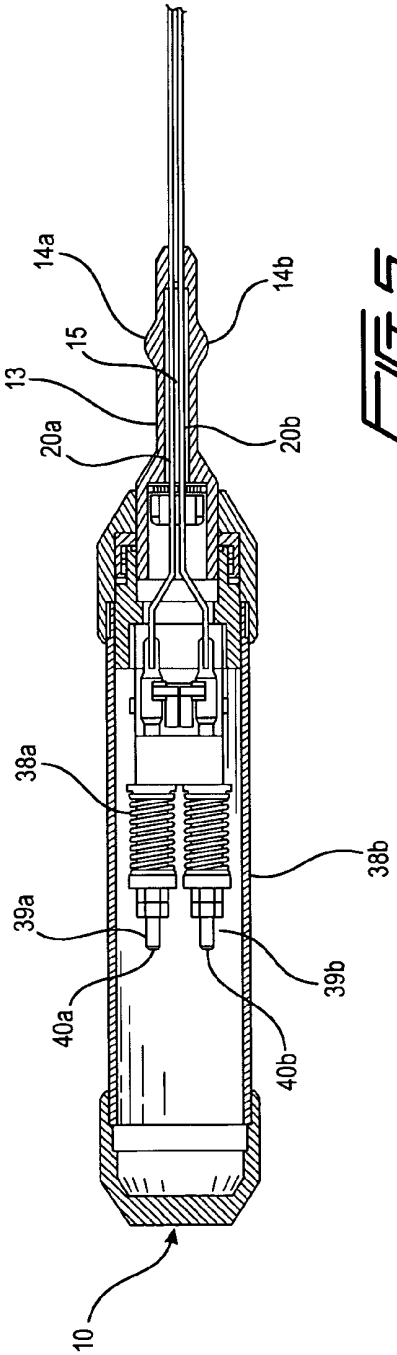
14a
14b
15
13
20a
20b
38a
38b
39a
39b
40a
40b
10

FIG. 5

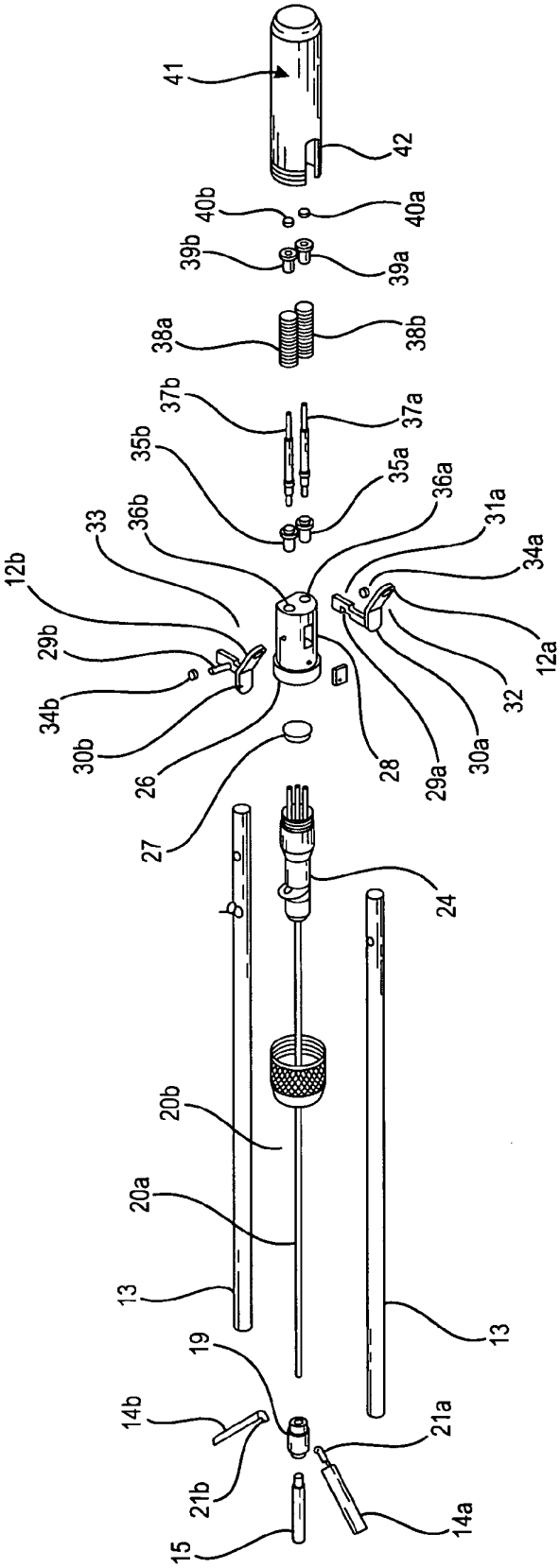
41
42
40b
40a
39b
39a
38a
38b
37b
37a
35b
35a
36a
36b
33
31a
34a
12b
29b
34b
30b
26
27
28
29a
30a
32
12a
24
20b
20a
13
13
19
14b
21b
21a
15
14a

FIG. 2

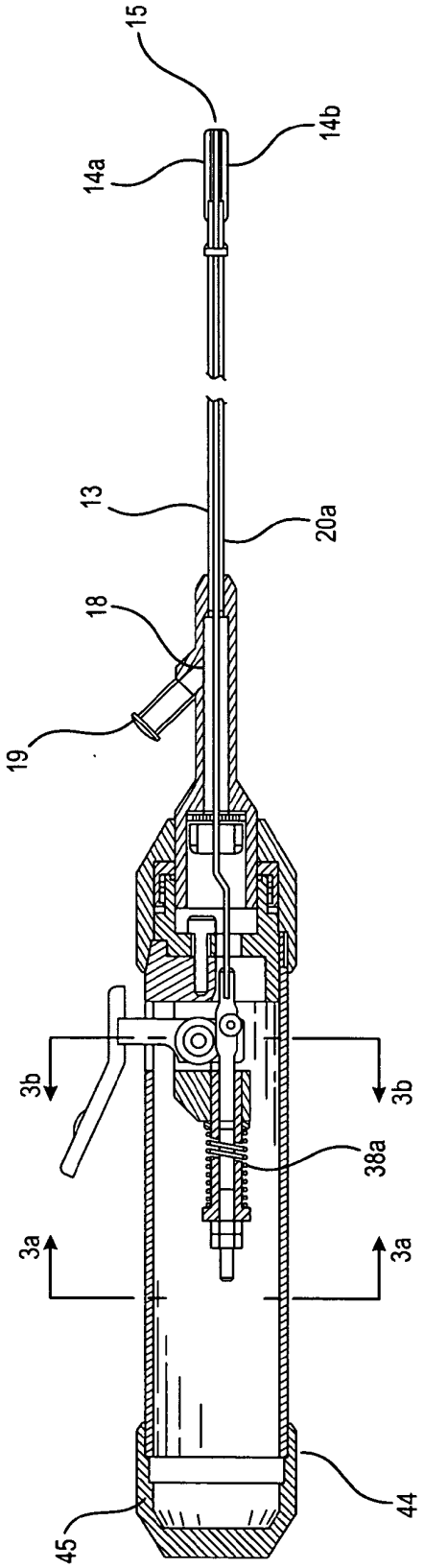

FIG. 3

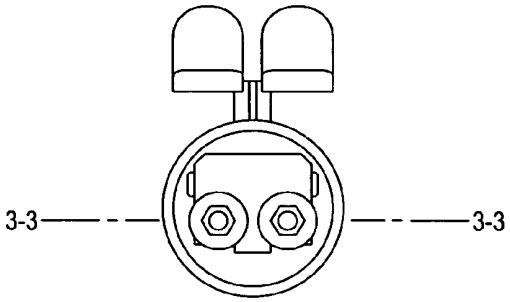

FIG. 3a

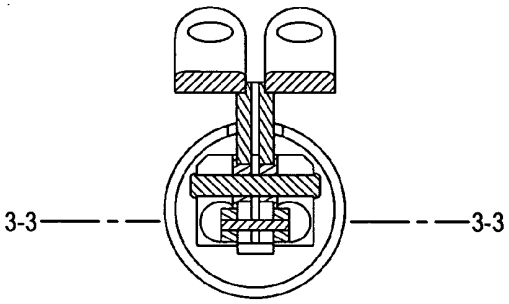

FIG. 3b

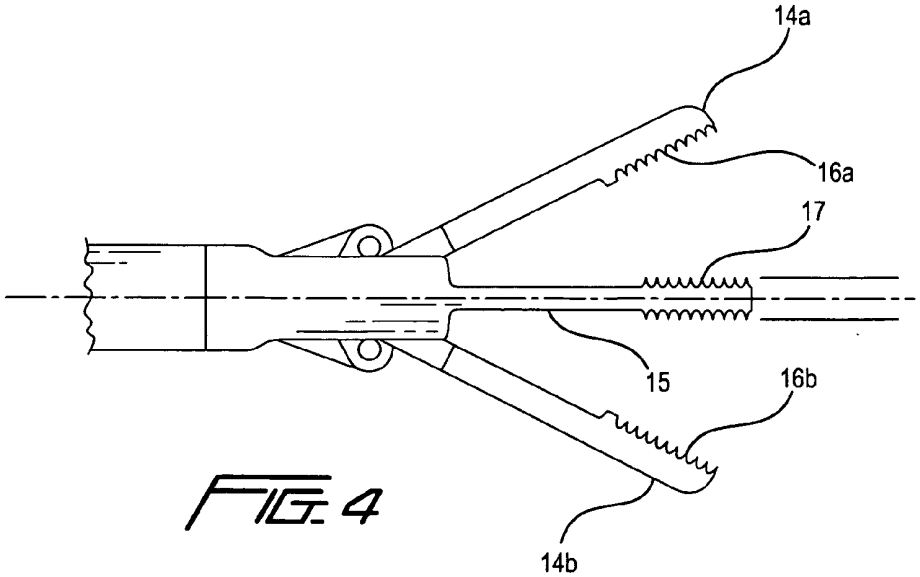

FIG. 4

DOUBLE GRASPER AND TRIGGER CONTROL MECHANISM

[0001] A double grasper with a new and improved trigger control mechanism comprises a narrow elongated cannula having a pair of jaws at one end which each cooperate with a central plate to secure tissues and permit a surgeon to manipulate the tissues in a laparoscopic procedure. The jaws are mounted on one end of an elongated cannula which includes two spring actuated user friendly triggers at the other end mounted on a longitudinal handle. Each trigger controls a specific jaw and is manipulated to open the jaw but passively closes without manipulation. The triggers may be operated by a single digit simultaneously or individually.

[0002] The present invention permits approximating any tissues that can physically reach each other during the performance of a laparoscopic procedure. With the flaps held together by the present invention, the suturing or stapling of the tissue flaps is greatly facilitated. A double grasper with two independent jaws and a unique trigger arrangement is used to sequentially grasp both tissue areas to be approximated against the central protruding plate and hold the tissue for stapling or suturing.

[0003] This invention represents an improvement over the Maritsa Tissue Approximator and Method of Using Same disclosed in U.S. Pat. No. 5,403,332 to applicant. This patent comprises an elongated cylinder which is divided into two elongated compartments by a central plate extends outwardly from the bottom of the cylinder. Independently controlled jaws close separately over the fixed plate to move a tissue part into approximation with a second tissue part to facilitate fixation of two tissue parts together. The patent also includes the graspers with different jaw configurations such as the Babcock, Ellis, Bucktooth, etc. that are currently used in the field.

[0004] More particularly, this application represents an improvement over applicant's pending application on an Atraumatic Single or Double Tissue Grasper Ser. No. 11/554,271 filed Oct. 30, 2006. As with most graspers, the jaws must be positively activated to open and deactivate to close. Also of interest are applicant's U.S. Pat. Nos. 5,817,121 and 6,391,046 on the Christoudias endodissector.

[0005] The double grasper comprising this invention relates to laparoscopic surgery and in particular a method employed in procedures involving tissue approximation such as nissen fundoplication, intestinal anastomosis, etc., an apparatus and method employed in laparoscopic herniography, wherein the laparoscopic tissue is approximated by the apparatus. This unique instrument permits the atraumatic manipulation of tissues in the abdominal cavity while securely and independently grasping and approximating or folding two different areas of tissues. The double grasper comprises a narrow cylinder or cannula having control rods extending longitudinally therewithin. The control end of the double grasper includes a handle and two independently operating spring loaded triggers mounted thereon with a control wire coupled to each trigger. The triggers are spring loaded and may be operated independently or together by one's thumb. The pivotal jaws are each connected at the other end of the control rod of a specific trigger. This allows each jaw to open and close independently of each other against a fixed intermediate plate. More importantly, the triggers are user friendly wherein the jaws open on manipulation of a particular trigger but then close automatically on release of the trigger. The triggers include means for tacile recognition of what jaw is being operated while the jaws include color coding or letter for visual recognition

[0006] In operation, the separated edges of a tissue can be approximated one at a time bringing them together in preparation for suturing and/or stapling to each other. Specifically, a distal peritoneal flap is engaged between a first jaw and the fixed plate by opening and releasing the trigger thus closing the jaw over the fixed plate with the tissue therebetween. The head of the instrument is then moved to the proximal flap with the jaws closed the second jaw recognized by the color or letter code is opened by depressing the second trigger recognized by the tacile code to correspond to the said jaw and then released to grasp the proximal flap. Thus the instrument approximates and holds the two flaps together for suturing or stapling. The subject tissue may be readily moved to the left or the right pulling the proximal and distal flaps together for stapling with ease. The instrument is simple and easy to use.

[0007] Accordingly, an object of this invention is to provide a new and improved trigger mechanism in apparatus for approximating tissue in laparoscopic surgery.

[0008] Another object of this invention is to provide a new and improved double grasper with a unique trigger arrangement for approximating tissue in laparoscopic surgery so that the tissue may be readily and expeditiously sutured or stapled during an operation.

[0009] A further object of this invention is to provide a new and improved double grasper which includes independently operated jaws which are positively opened with a single digit and then close passively to grasp certain tissue against a central plate under control of spring loaded triggers mounted to the handle.

[0010] A more specific object of this invention is to provide a new and improved instrument for laparoscopic surgery specifically a double grasper for approximating tissues which can physically reach each other by using independently operated jaws controlled by user friendly spring loaded triggers which actively open but passively close, mounted to a handle which include a dimple on one trigger and a bubble on the other for tacile recognition of the jaw being operated and color or letter code of the jaws for visual recognition of the jaws, allowing identification of which trigger corresponds to which jaw.

[0011] The above and other objects and advantages of the present invention may be more clearly seen when viewed in conjunction with the accompanying drawings wherein:

[0012] FIG. **1** is a top view of the invention;

[0013] FIG. **2** is an exploded view of the invention;

[0014] FIG. **3** is a side cross-sectional view of FIG. **1**;

[0015] FIG. **3***a* is an enlarged cross-sectional view taken along the lines **3***a*-**3***a* of FIG. **3**;

[0016] FIG. **3***b* is an enlarged cross-sectional view taken along the lines **3***b*-**3***b* of FIG. **3**;

[0017] FIG. **4** is an enlarged view of the jaws of FIG. **1** in operation; and

[0018] FIG. **5** is a bottom view in cross-section of the subject invention shown in FIG. **1**.

[0019] Referring now to the drawings, this application relates to instruments for laparoscopic surgery and in particular a double grasper **10** known as the Christoudias Approximator. The instrument **10** comprises a handle **11** having pair of triggers **12***a*, **12***b* mounted thereto, an elongated cannula **13** extending longitudinally along the hand axis and being

coupled to the handle **11** at one end and having a pair of grasping jaws **14***a*, **14***b* at the other end. The jaws **14***a*, **14***b* are each controlled by a separate trigger **12***a*, **12***b* said triggers **12***a*, **12***b* being physically adjacent to each other. The jaw **14***a* grasps tissue against a central plate **15** so that the tissue may be moved or manipulated to a point where the second jaw **14***b* grasps another portion of tissue to bring the two tissues together for suturing, etc.

[0020] Importantly, the triggers **12***a* and **12***b* open the jaws **14***a* and **14***b* respectively but the jaws **14***a*, **14***b* close automatically when pressure is released on the triggers **12***a*, **12***b*. The trigger design is more user friendly than the prior art where active manipulation is required to both open and close the jaws **14***a*, **14***b*.

[0021] The jaws **14***a*, **14***b* passively close without manipulation due to the action springs **38***a*, **38***b*.

[0022] The operation of the jaws **14***a*, **14***b* in an open position is shown in FIG. **4** with each jaw having a plurality of teeth **16** along the internal face for cooperating with the teeth **17** on the central plate **15**. The central plate **15** may be covered with gauze if desired. The elongated cannula **13** also includes a clean-out aperture **18** with a plug **19** in at the other end of the cannula **13**.

[0023] FIG. **2** shows an exploded view of the invention wherein the jaws **14***a*, **14***b* each include a rear projecting portion **21***a*, **21***b* respectively mounted within an aperture **19** the stationary portion **18** for pivotal movement. A central plate **15** is also depicted which is engaged by the jaws **14***a*, **14***b* on opposite sides.

[0024] Control rods **20***a*, **20***b* are enclosed within a heat shrink layer **23** within an elongated cannula **22**. The control rods **20***a*, **20***b* are mounted to respective jaws **14***a*, **14***b* at one end and are coupled to the respective triggers **12***a*, **12***b* at the other end. Pressing trigger **12***a* operates jaw **14***a* via control rod **20***a* and similarly control rod **20***b* with trigger **12***b* operates jaw **14***b*.

[0025] The control rods **20***a*, **20***b* extend through a nose cone **24** with a clean out plug **25**. The nose cone **24** is threaded onto a hollow super structure **26** with an internal seal **27**. The structure **26** includes an aperture **28** into which the trigger portions **31***a*, **31***b* are inserted. The triggers **12***a*, **12***b* each include an inclined upper portion **30***a*, **30***b* with a dimple **32** on one portion and a bubble **33** on the other portion so that the surgeon can recognize by tacile recognition what jaw **14***a* or **14***b* he is operating.

[0026] A trigger shaft **29***a*, **29***b* projects inwardly from each portion **31***a*, **31***b* and includes roller **34***a*, **34***b* at its end. Driver shaft guides **35***a*, **35***b* are mounted within apertures **36***a*, **36***b* in structure **26** and a drive shaft **37***a*, **37***b* is mounted within each guide **35***a*, **35***b*. Springs **38***a*, **38***b* are mounted about each shaft **37***a*, **37***b* and secured in place by a spring guide **39***a*, **39***b* and hex nut **40***a*, **40***b*. The springs **38***a* and **38***b* cause automatic closure of the jaws **14***a*, **14***b* when pressure is released on the particular trigger.

[0027] A hollow tube body **41** having a trigger slot **42** is mounted over the structure **26** and internal controls and nose cone **24** is threadingly mounted thereto. At the other end of the tube body **41** a knurled end portion **45** engages exterior threads **44**.

[0028] FIG. **3***a* shows an enlarged rear cross-sectional view of the trigger assembly while FIG. **3***b* shows an enlarged front cross-sectional view of the trigger assembly.

[0029] FIG. **4** shows the jaws **14***a* and **14***b* of the double grasper **10** in an open position. The internal teeth **16***a* and **16***b* on the jaws **14***a*, **14***b* cooperate with the teeth **17** on the central plate **15**. Alternatively, the central plate **15** and indeed the jaws **14***a*, **14***b* may be gauze covered.

[0030] In operation, the double grasper **10** is inserted through a standard laparoscopic port. The jaws **14***a* and **14***b* and cannula **13** are small enough, approximately 10 mm in diameter, to fit through the port. The surgeon manipulates the instrument **10** usually with one hand and operates the trigger **12***a* with one's thumb to grasp the desired tissue between a jaw **14***a* and the central plate **15** as pressure is released on the trigger **12***a*. Next the grasper **10** is moved to an adjacent tissue and the jaw **14***b* is opened using one's thumb with trigger **12***b* to grasp another tissue upon release so that the tissue held by the two jaws **14***a*, **14***b* and central plate **15** are in proximity for suturing, etc.

[0031] The operation is often conducted in a darkened room so that tacile recognition of what trigger **12***a* or **12***b* controls what jaw **14***a* or **14***b* is noted by the tacile recognition of the dimple **32** or bubble **33** on the triggers **12***a*, **12***b*. Both triggers **12***a*, **12***b* can be operated together so that the tissue can be readily released or grasped. As a further advantage, the double grasper **10** may be easily held and operated with one hand freeing the surgeon's hand for other purposes.

[0032] As shown in FIGS. **2** and **3**, each trigger **12***a*, **12***b* is mounted to a vertical member **31***a*, **31***b* within the handle **11** which actuates a spring loaded member **37***a*, **37***b* coupled to the control rod **20***a* or **20***b*. The cannula **13** is held in place within the handle **11** by a front nut **23** which is threaded onto the handle **11** while the rear portion **24** of the handle **11** includes another threaded member **25** to cover the aperture **18** in the hollow handle **11**.

[0033] One of the triggers **12***a* includes a dimple **31** and the other trigger **12***b* includes a bubble **32** for tactile recognition of the particular trigger during an operation. One of the jaws **14***a* is gold and the other jaw **14***b* is a silver metal for color recognition of the particular jaw or lettering may be used on the jaws **14***a*, **14***b*. The spring loaded feature of the triggers **12***a*, **12***b* permits faster closing of the jaw **14***a*, **14***b* without manipulation of the triggers **12***a*, and **12***b*. Further, the jaws **14***a*, **14***b* may be both activated together or singularly. Each jaw **14***a*, **14***b* is coupled by a wire **37***a*, **37***b* to a particular spring **38***a*, **38***b*. Pressing the trigger **12***a*, **12***b* downwardly compresses the spring **38***a*, **38***b* and opens the jaw **14***a*, **14***b*. When the trigger **12***a*, **12***b* is released; the jaw **14***a*, **14***b* closes automatically to grasps the tissue.

[0034] While the invention has been explained by a detailed description of certain specific embodiments, it is understood that various modifications and substitutions can be made in any of them within the scope of the appended claims that are intended also to include equivalents of such embodiments.

1. A double grasper for approximating tissues in laparoscopic surgery with one hand comprises:

a longitudinal handle having a first and second trigger mounted thereon adjacent to each other;

means for tactile recognition on each trigger and visual recognition for each jaw;

an elongated cannula having internal control means coupled at one end to each trigger and mounted within the handle and extending longitudinally outward therefrom;

a first jaw and a second jaw at the other end of the elongated cannula having a plate mounted between said jaws wherein each trigger controls a particular jaw to open

and passively close to grasp tissue against the plate to approximate the tissue for further operations; and,

wherein the triggers may be operated by a single digit.

2. A double grasper in accordance with claim **1** wherein:

the jaws each include internal toothed edges; and,

the plate includes a first and a second side each having teeth to mesh with the teeth on the jaws.

3. A double grasper in accordance with claim **2** further including:

a clean-out port mounted on the handle.

4. A double grasper in accordance with claim **1** wherein:

the triggers include an operative upper portion and are each spring loaded, said springs being coupled to the control means to close the jaw upon release of the trigger;

the means for tactile recognition of the jaw being operated includes a dimple on the operative upper portion of one trigger; and,

includes a bubble on the operative portion of the other trigger for tactile recognition of the particular jaw being activated.

5. A double grasper in accordance with claim **1** wherein:

the triggers are situated in adjacent positions to each other and can be activated one at a time or both together opening the jaws one at a time or both simultaneously with the same operating digit (thumb).

6. A double grasper in accordance with claim **1** wherein:

the plate is gauze covered.

7. A double grasper in accordance with claim **1** wherein:

the control means comprises a first elongated rod connected at one end to a first pivotal jaw and a second elongated rod coupled at one end to a second pivotal jaw, said elongated rods being coupled to a particular trigger at their other end, said triggers being spring loaded to maintain the respective jaws in a normally closed position.

8. (canceled)

9. (canceled)

10. A double grasper in accordance with claim **5** wherein:

each trigger further includes a downwardly extending portion having a transverse shaft affixed thereto;

an aperture in said handle through which the downwardly extending trigger portions are positioned; and,

a drive shaft coupled to each trigger shaft and to a control rod within the handle and a coiled spring mounted about each shaft to bias said triggers to automatically close a particular jaw upon release of the particular trigger.

11. A double grasper in accordance with claim **1** wherein:

the jaws are color coded to provide visual recognition of the particular jaw corresponding to a particular trigger.

12. A double grasper in accordance with claim **1** wherein:

the jaws include lettering to provide visual recognition of the jaw being operated by a particular trigger.

* * * * *

专利名称(译)	双抓紧器和触发器控制机构		
公开(公告)号	US20100016883A1	公开(公告)日	2010-01-21
申请号	US12/175943	申请日	2008-07-18
[标]申请(专利权)人(译)	CHRISTOUDIAS GEORGEÇ		
申请(专利权)人(译)	CHRISTOUDIAS GEORGEÇ		
当前申请(专利权)人(译)	CHRISTOUDIAS GEORGEÇ		
[标]发明人	CHRISTOUDIAS GEORGE C		
发明人	CHRISTOUDIAS, GEORGE C.		
IPC分类号	A61B17/00 A61B1/00		
CPC分类号	A61B17/29 A61B2017/2926 A61B2017/2912		
外部链接	Espacenet USPTO		

摘要(译)
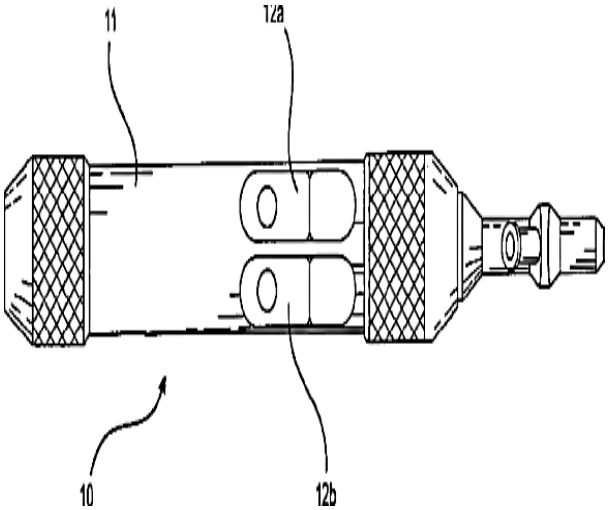
本发明包括一种具有独特触发机构的器械，用于近似任何在执行任何腹腔镜手术期间可以彼此物理接触的组织。用户友好的双抓紧器包括细长的插管，该插管在一端具有视觉编码的钳口，其与中间构件配合。视觉编码的钳口连接到套管内的控制装置，控制装置连接到安装在纵向手柄上的编码控制触发器。每个扳机都是弹簧加载的，以在手动打开钳口后被动地关闭特定的钳口。两个触发器可以单独操作或同时操作相同的操作数字。触发器包括一个触发器上的凹坑和另一个触发器上的气泡，以便操作员可以识别哪个触发器对应于哪个钳口，从而通过感觉控制钳口。钳口也被编码用于不同颜色或字母的视觉识别。