US 20080109014A1

(19) United States

(12) Patent Application Publication

(10) Pub. No.: US 2008/0109014 A1

(43) Pub. Date: May 8, 2008

de la Pena

(54) ROBOTIC SURGICAL DEVICE

(76) Inventor: **Alejandro Ramos de la Pena**, San Pedro Garza Garcia (MX)

Correspondence Address:
YOUNG & THOMPSON
209 Madison Street, Suite 500
ALEXANDRIA, VA 22314

(21) Appl. No.: **11/593,011**

(22) Filed: **Nov. 6, 2006**

Publication Classification

(51) **Int. Cl.**
A61B 19/00 (2006.01)

(52) **U.S. Cl.** **606/130**; 901/15; 901/24; 901/28; 901/30

(57) **ABSTRACT**

A robotic surgical device for using in laparoscopic surgery, including two robotic arms, each having at least six joints providing a total of fourteen degrees of movement that accurately reproduce the movements of a human torso complete with arms.

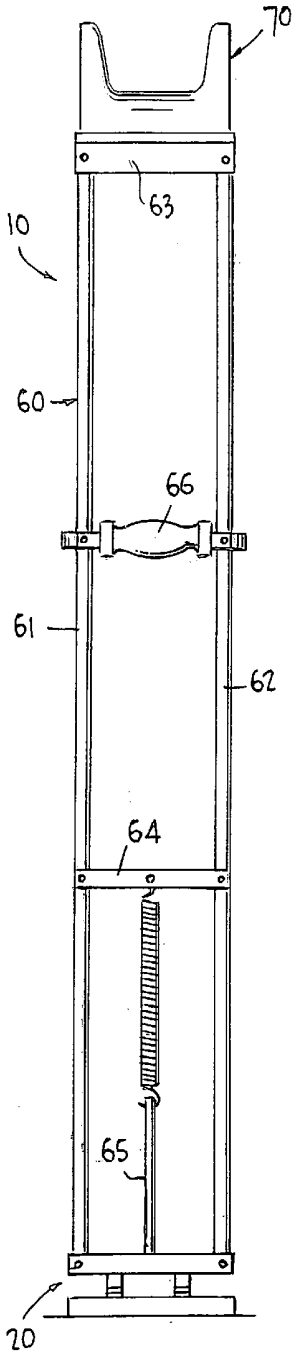

FIG. 1

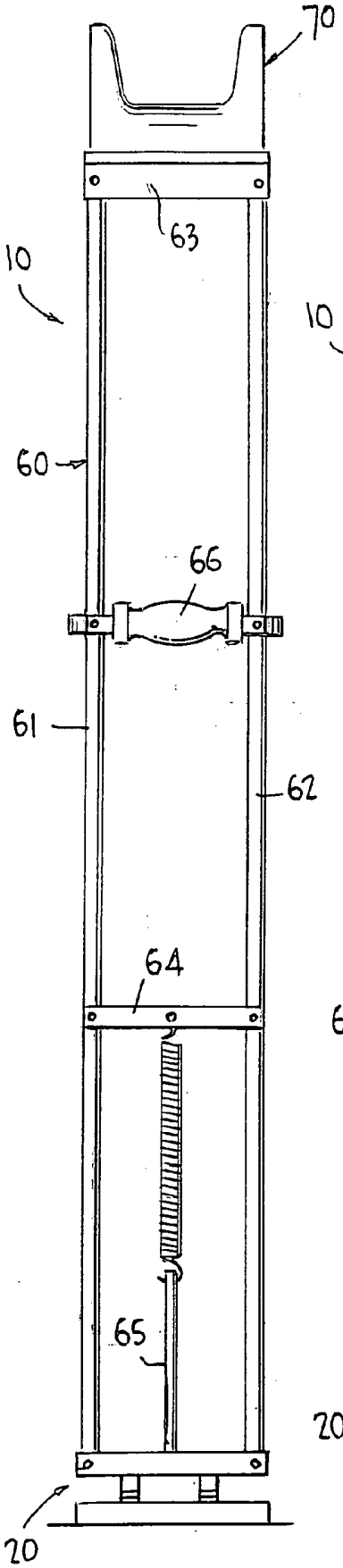

FIG. 2

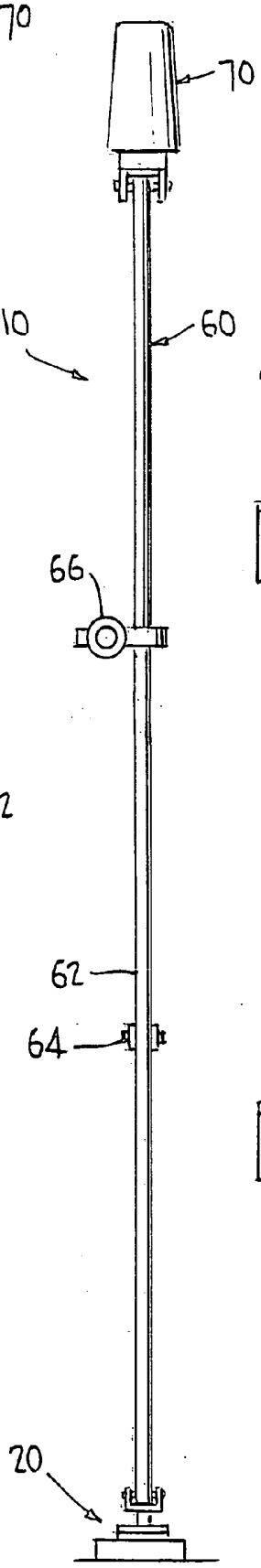

FIG. 6

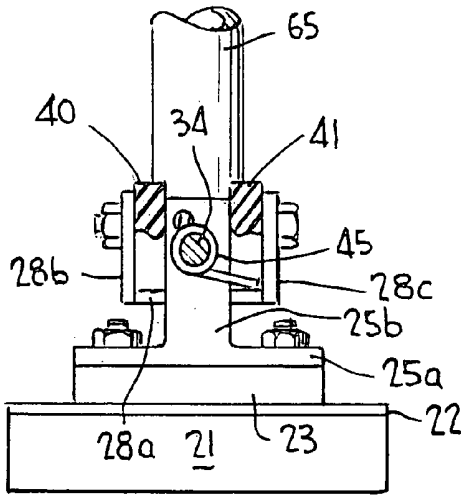

FIG. 7

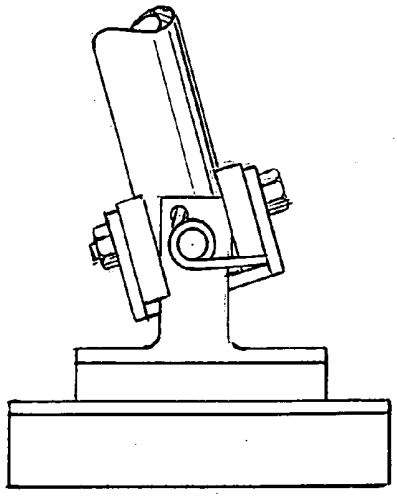

FIG. 3

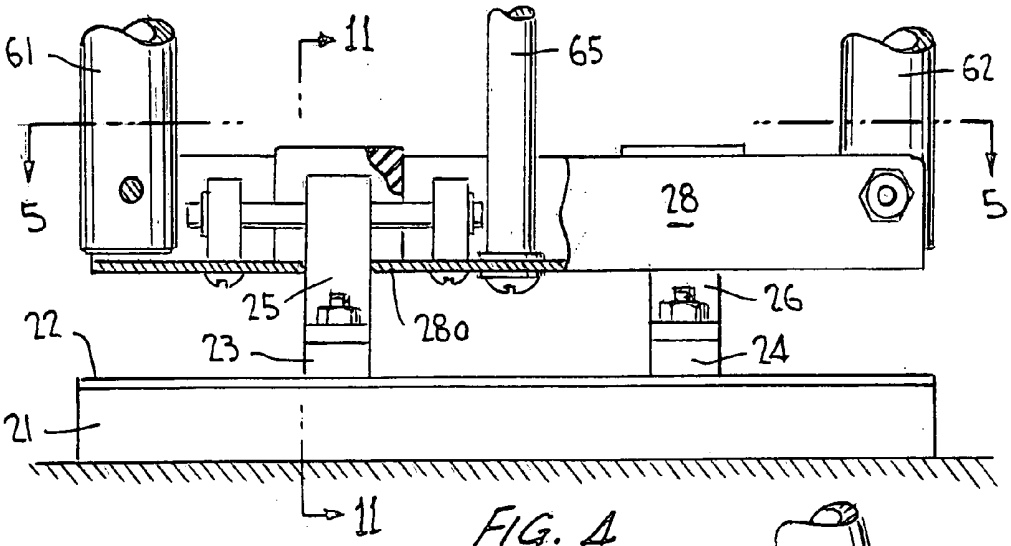

FIG. 4

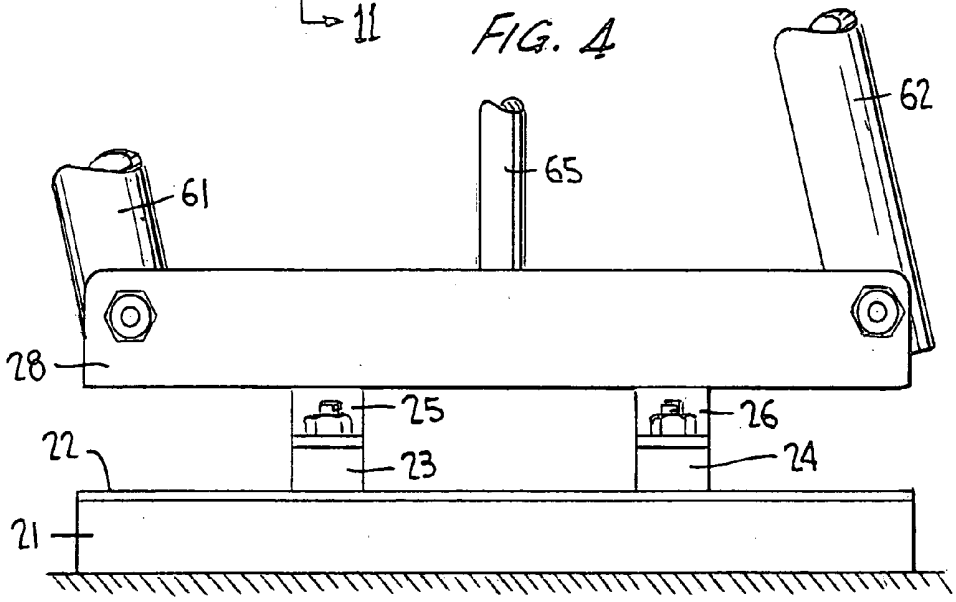

FIG. 5

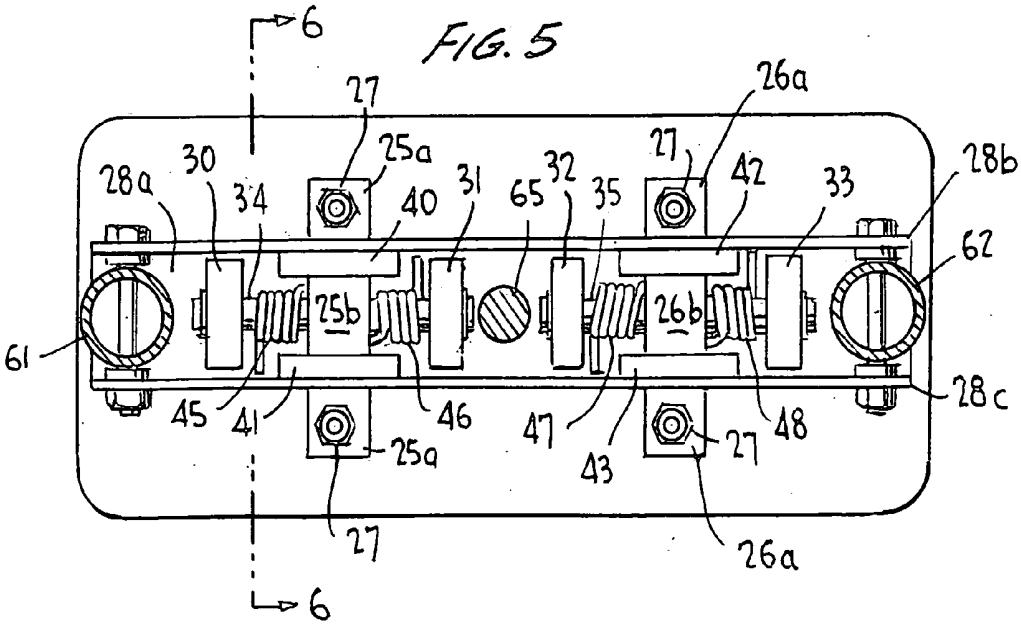

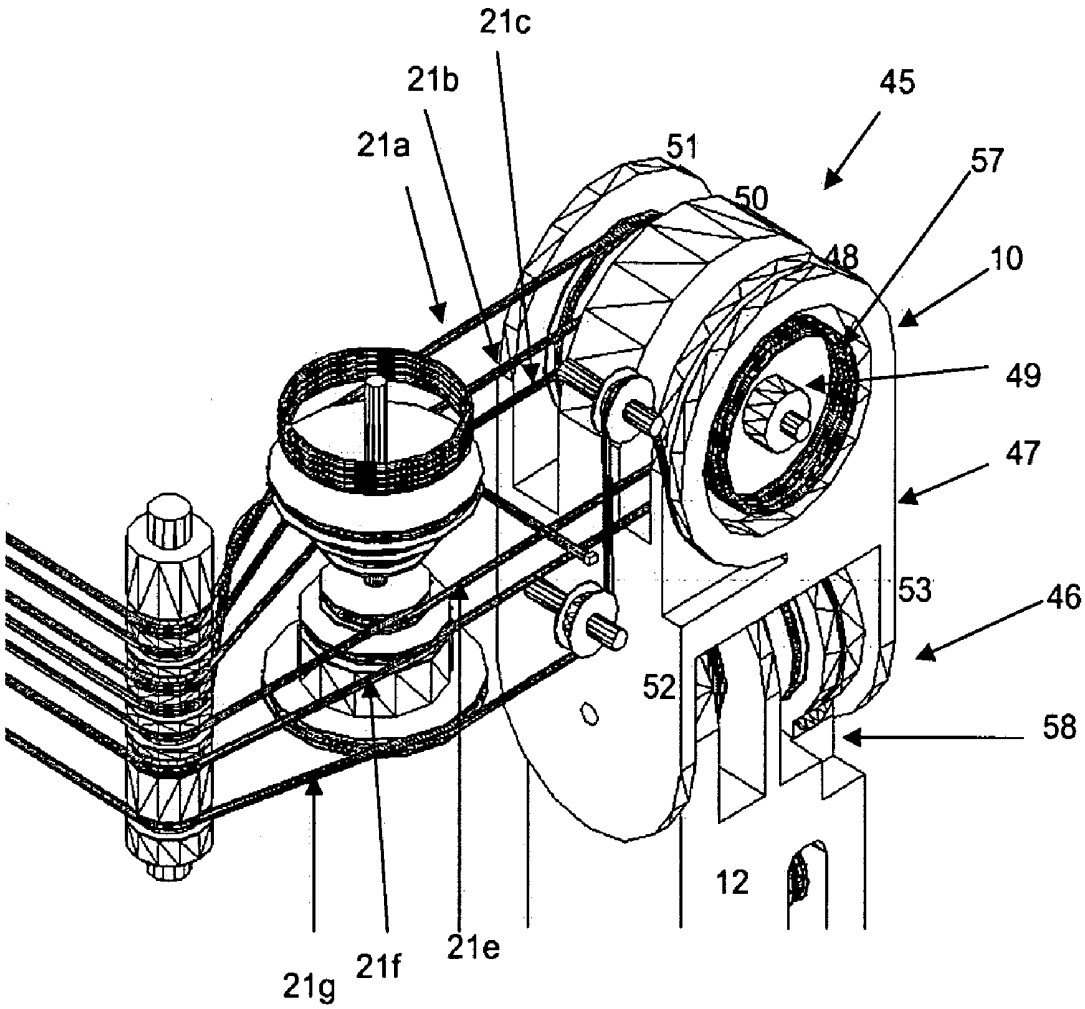

FIGURE 8

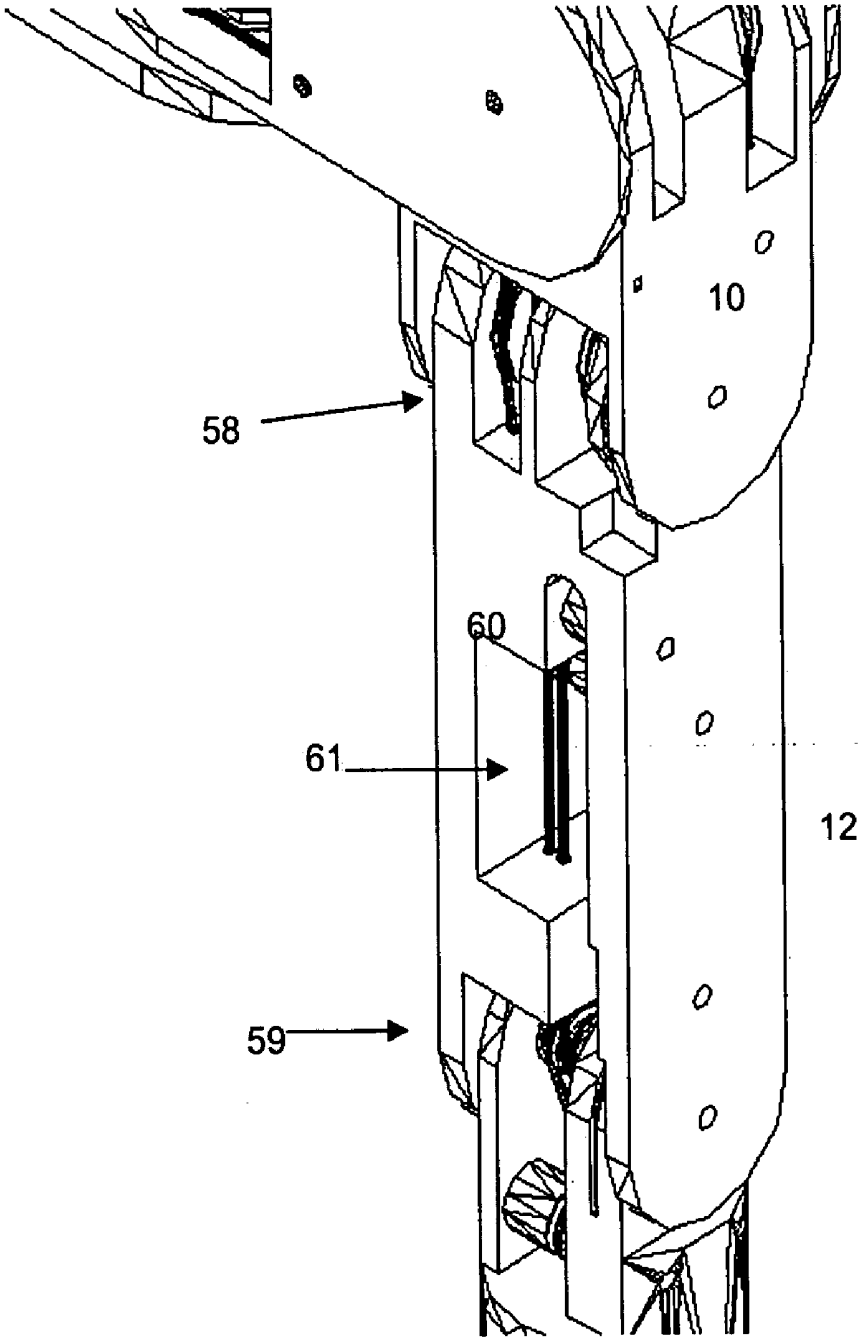

FIGURE 9

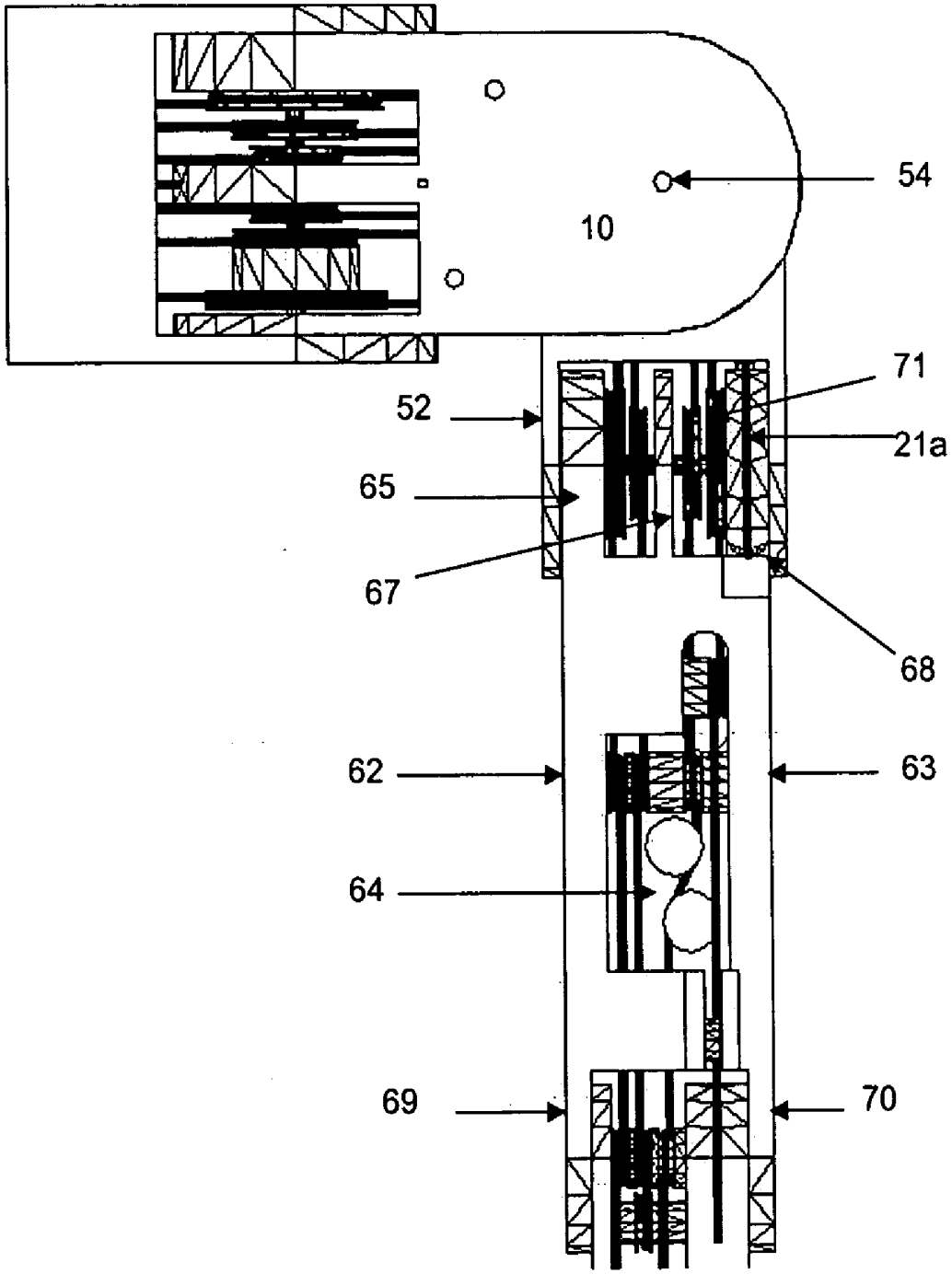

FIGURE 10

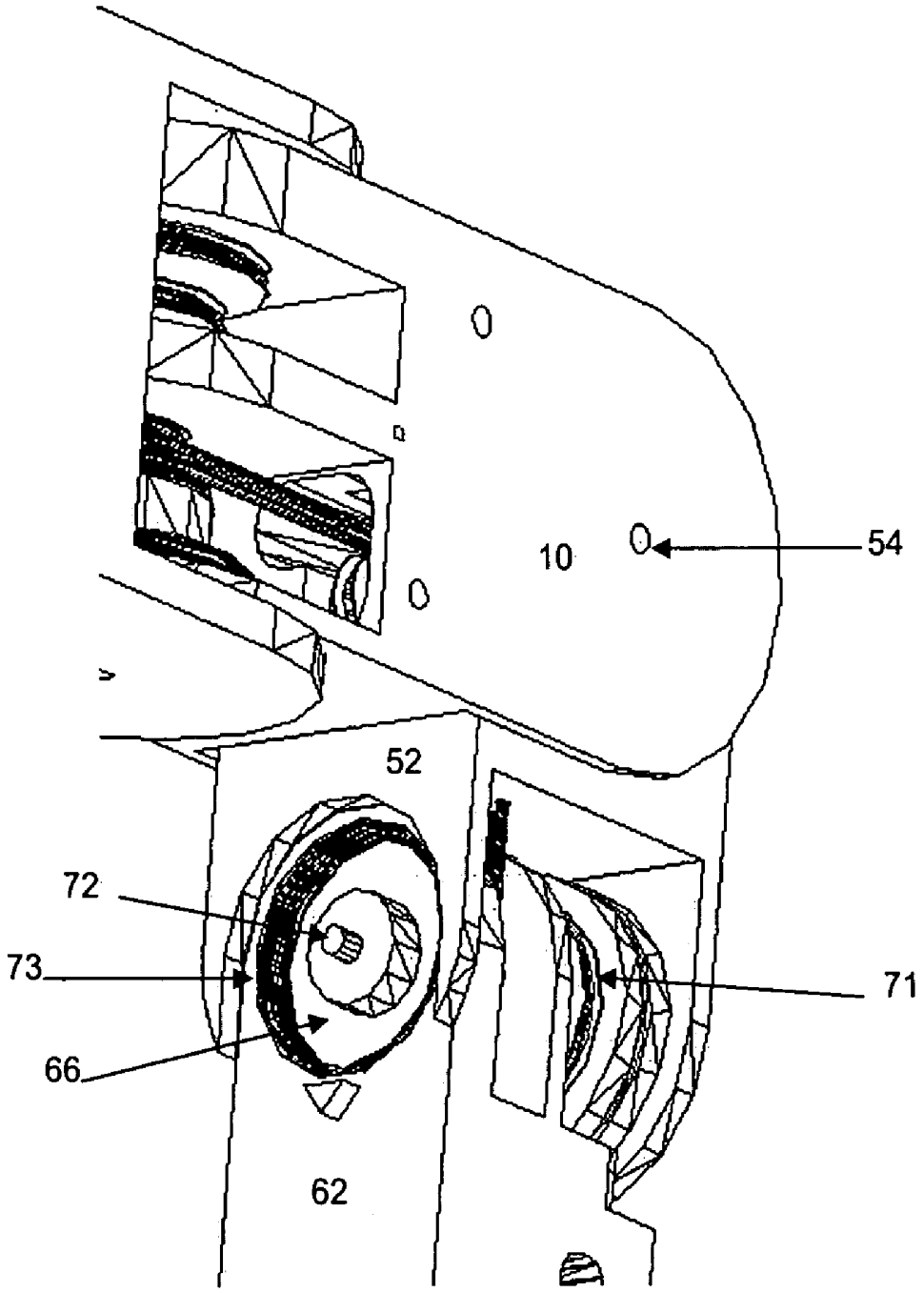

FIGURE 11

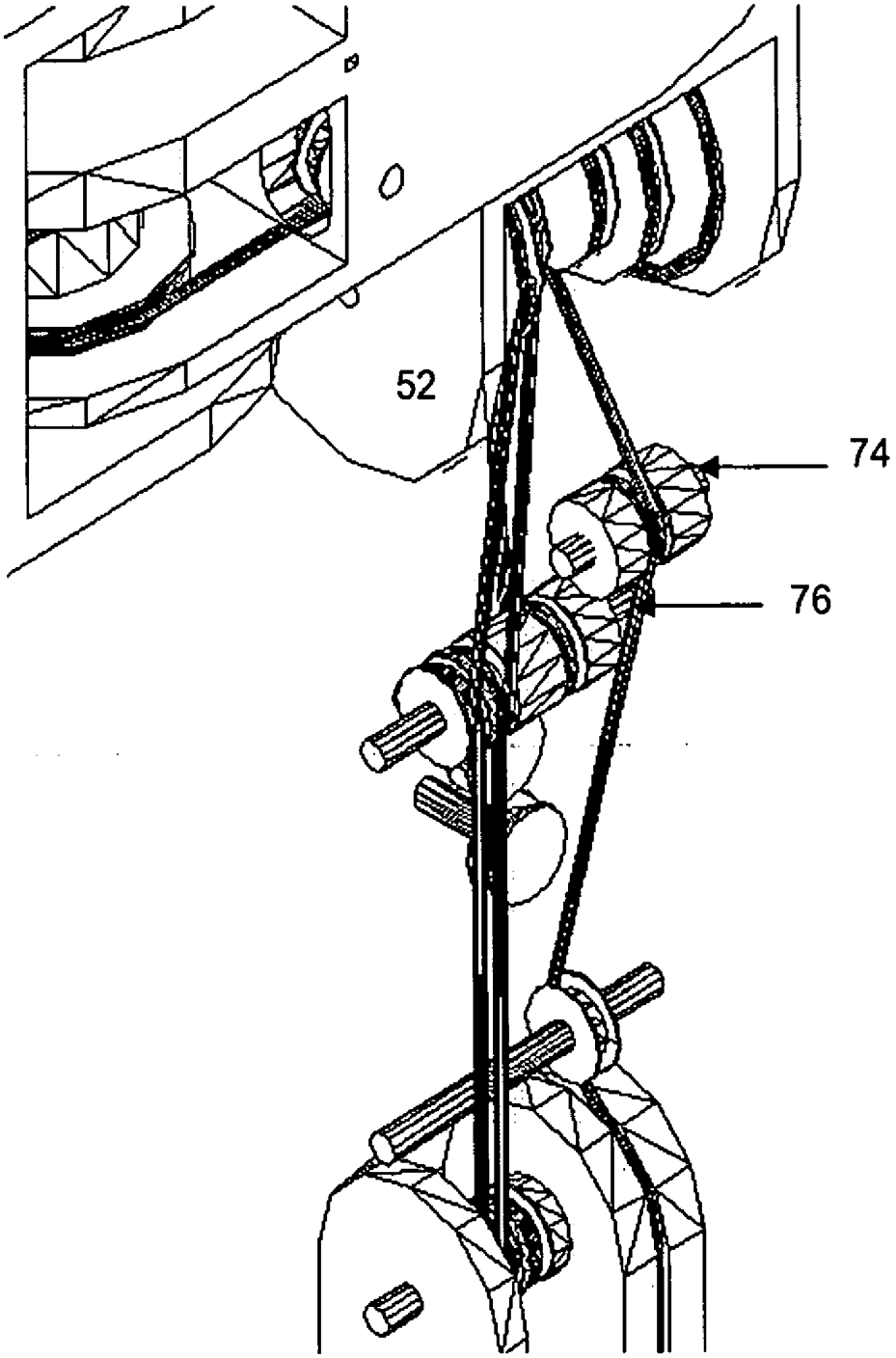

FIGURE 12

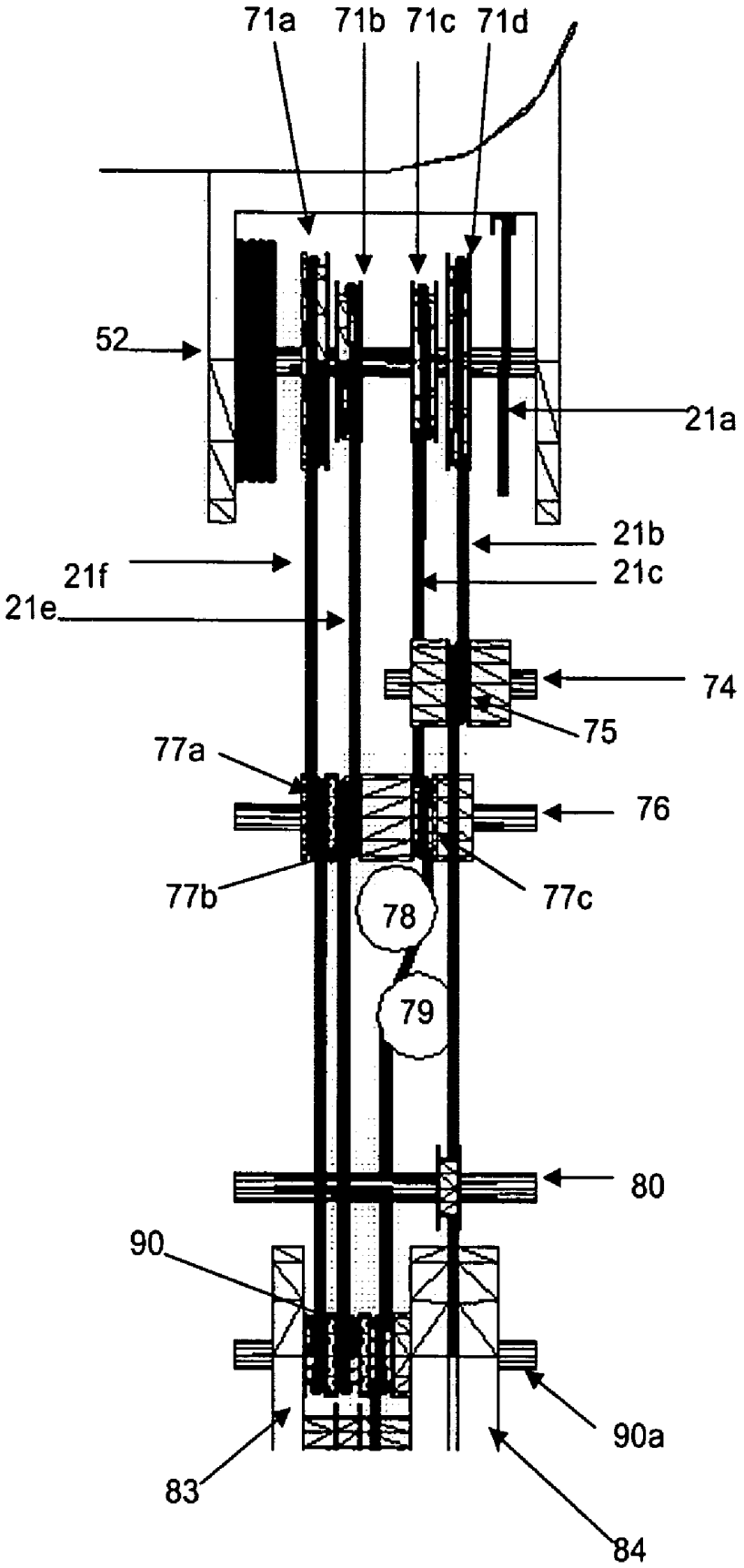
71a
71b
71c
71d
52
21a
21b
21c
21f
21e
74
75
77a
76
77b
77c
78
79
80
90
90a
83
84

FIGURE 13

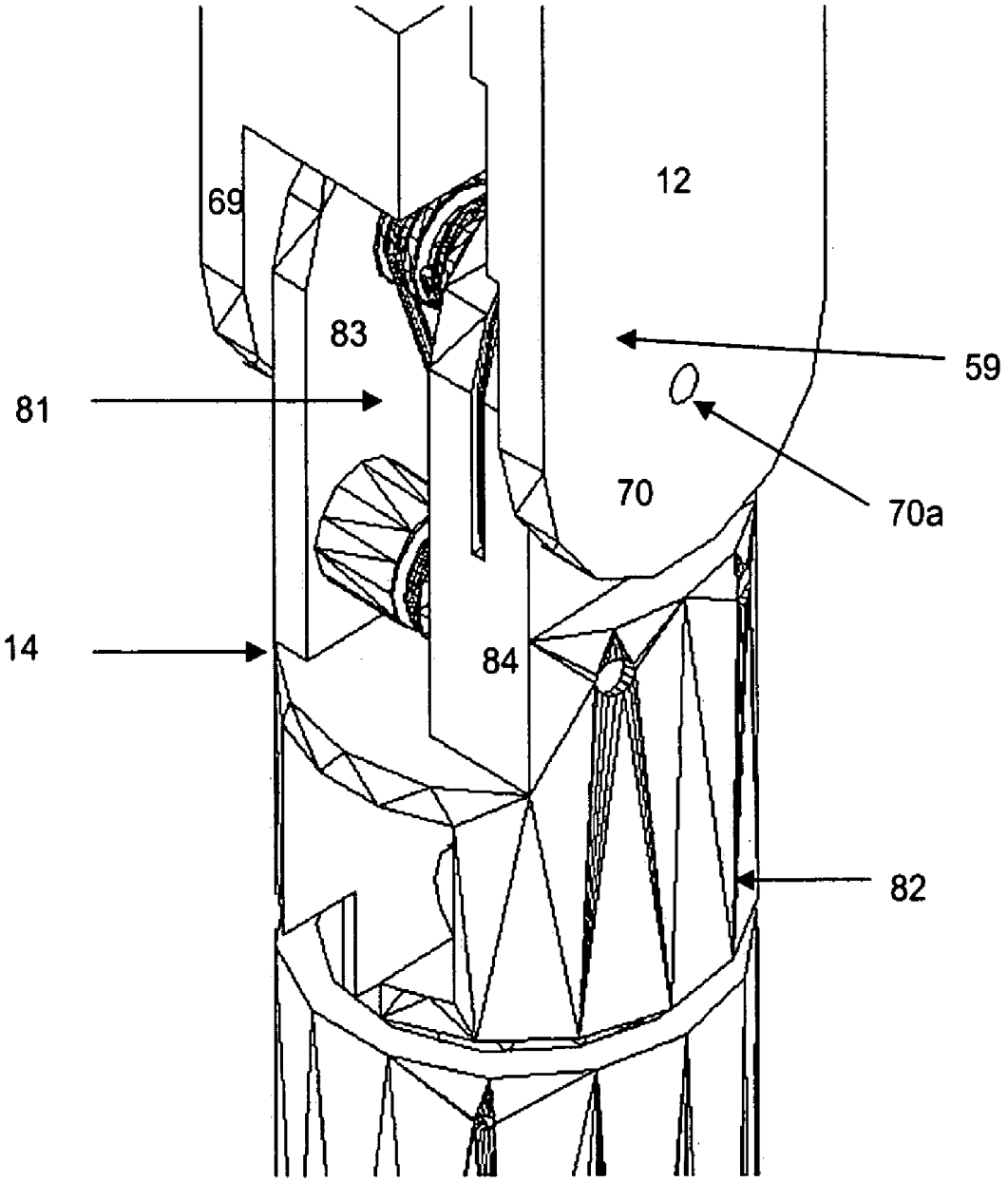

FIGURE 14

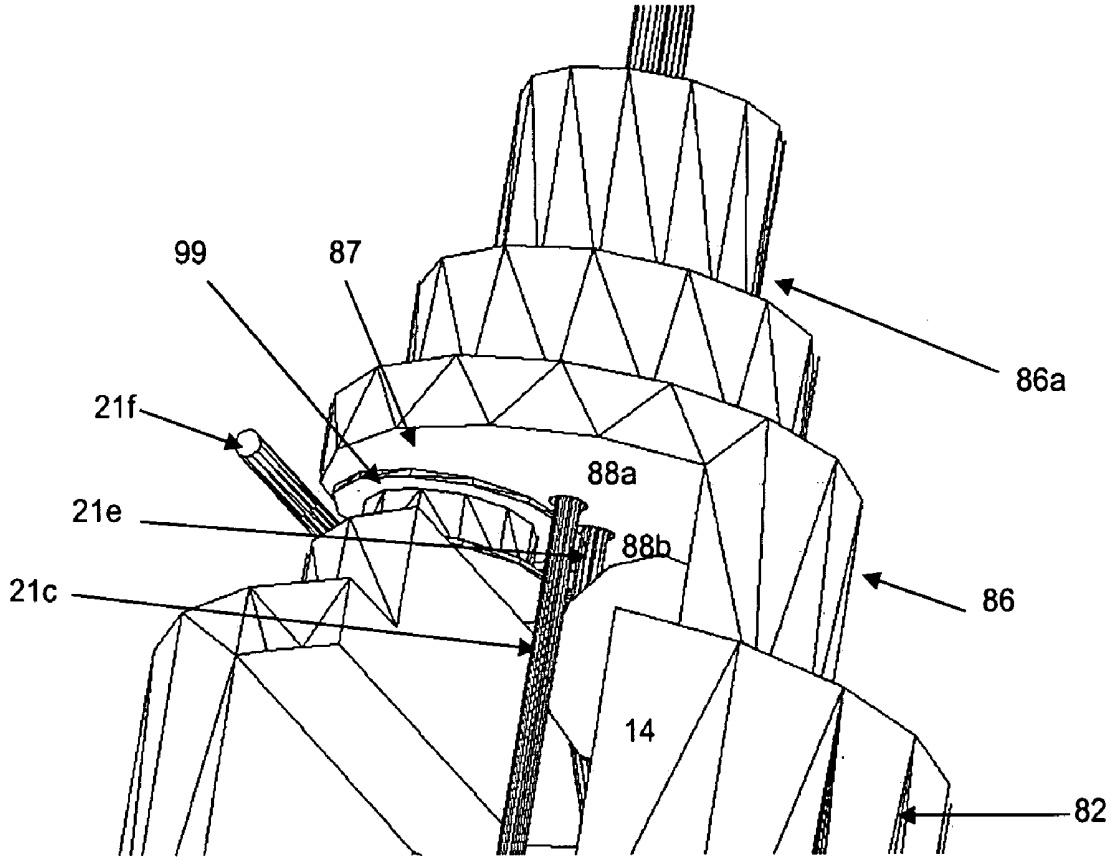

FIGURE 15

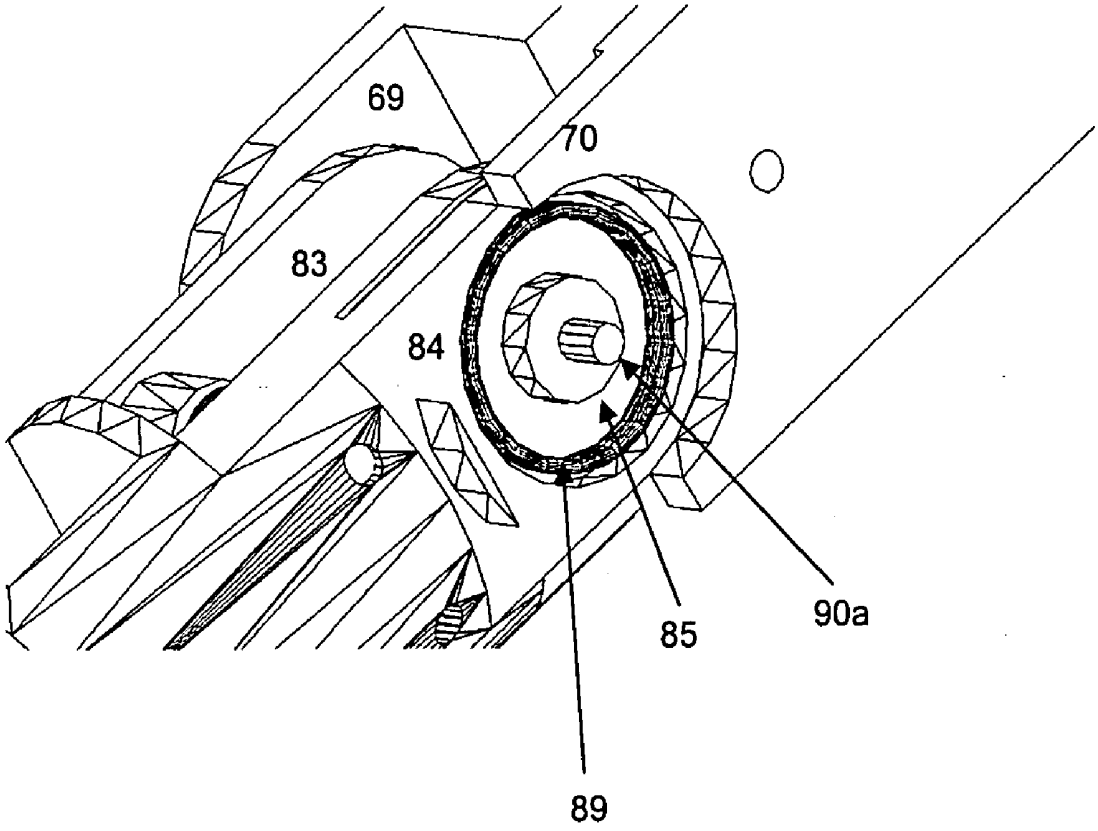

FIGURE 16

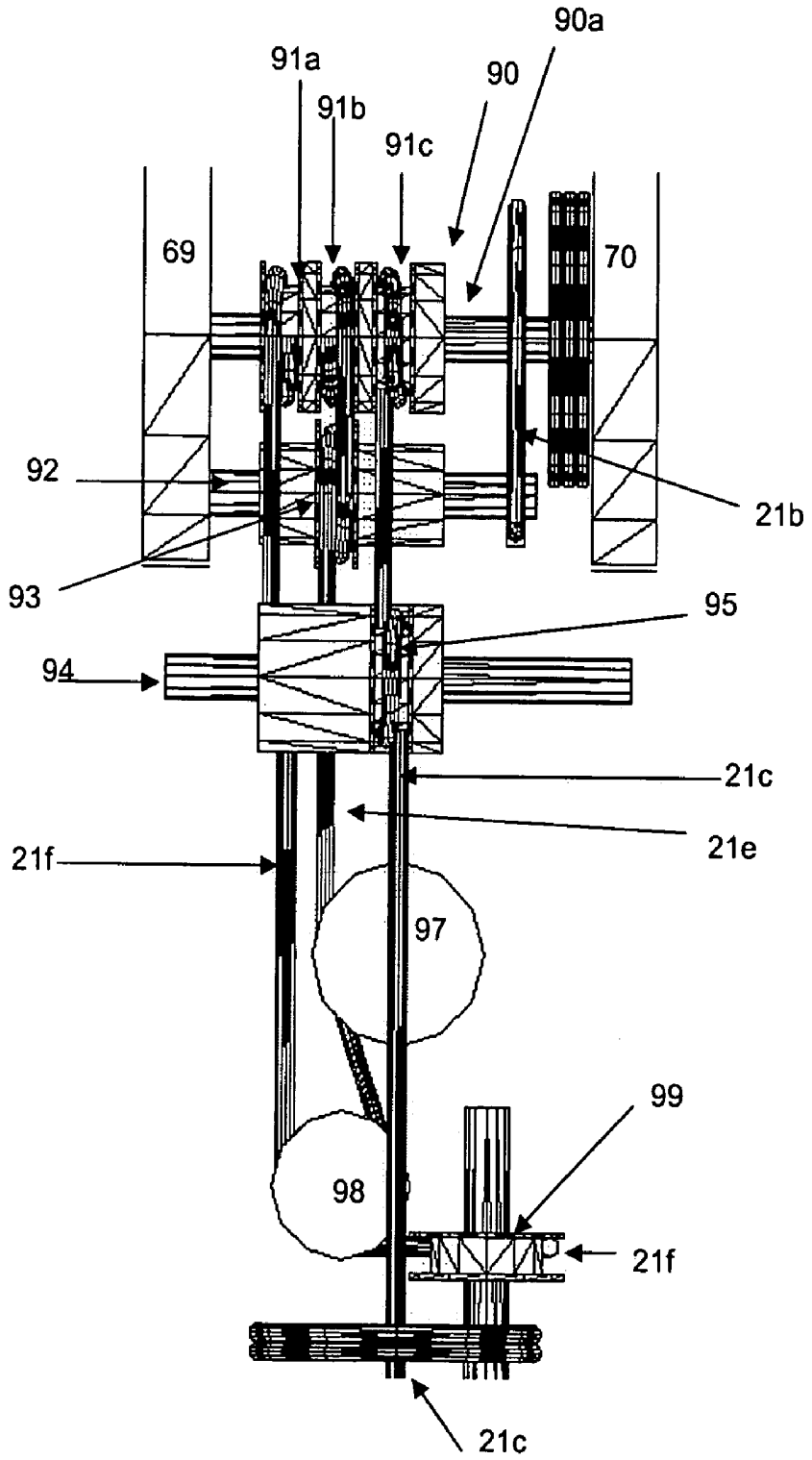
90a
91a
90
91b
91c
69
70
92
21b
93
95
94
21c
21e
21f
97
99
98
21f
21c

FIGURE 17

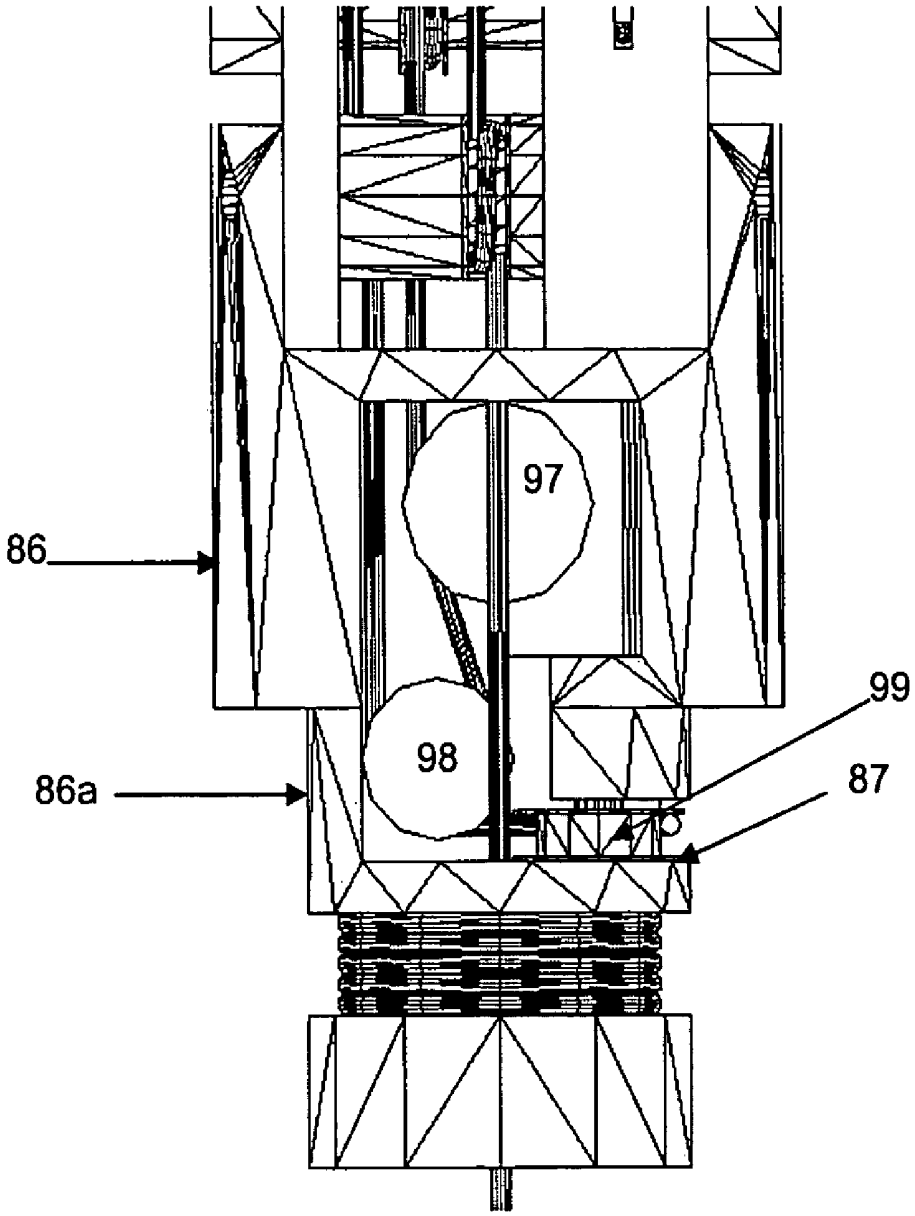

FIGURE 18

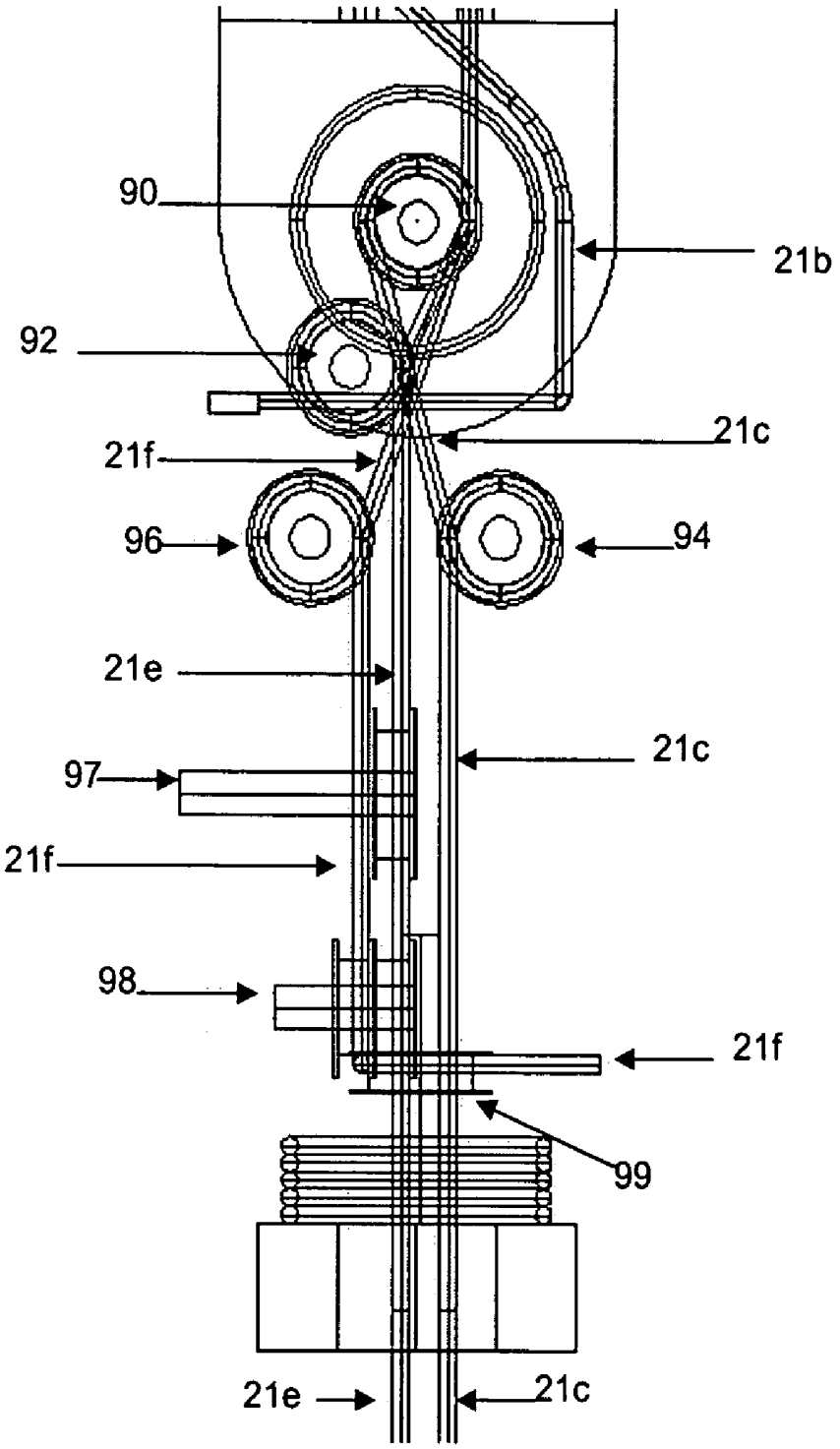

FIGURE 19

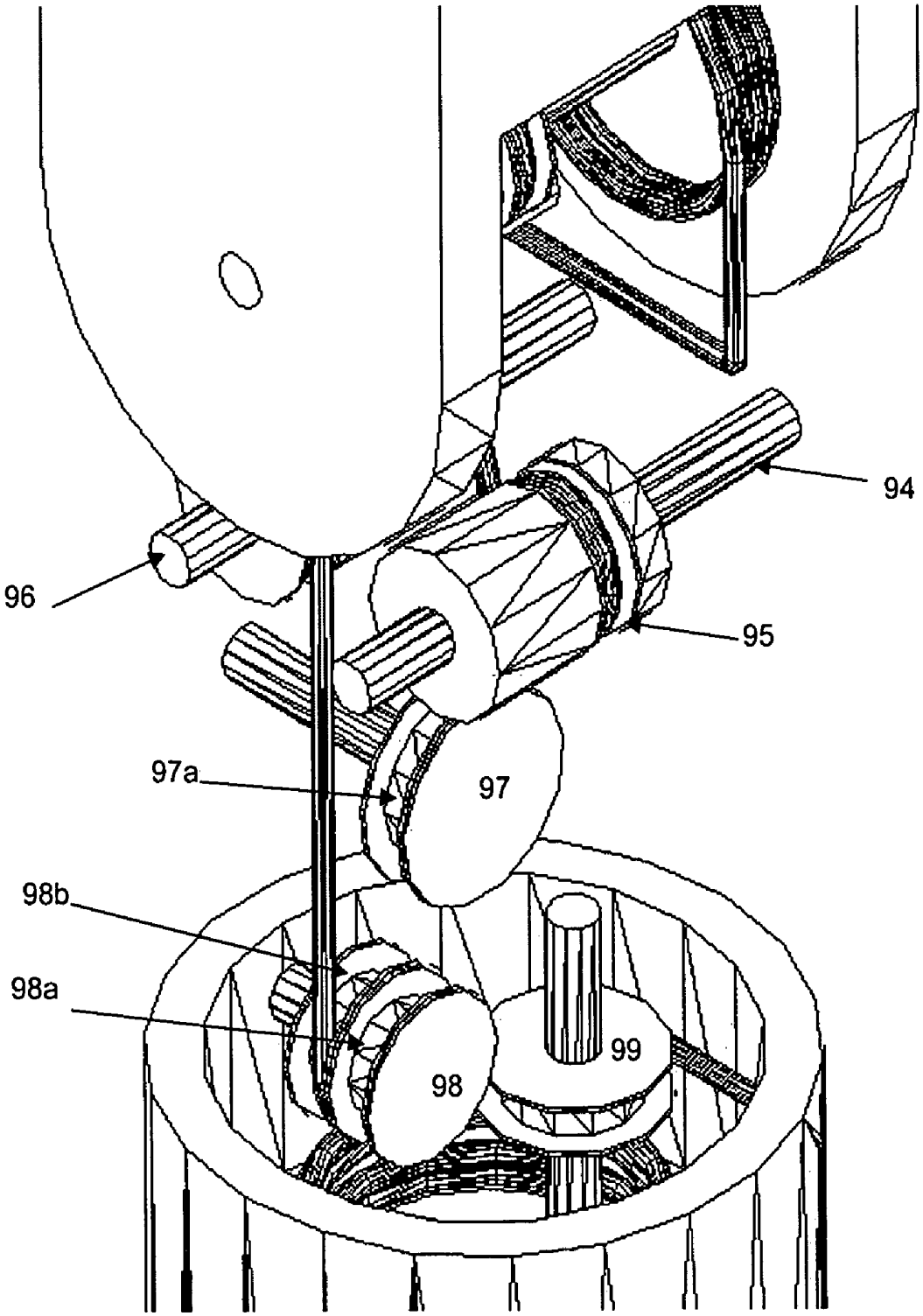

FIGURE 20

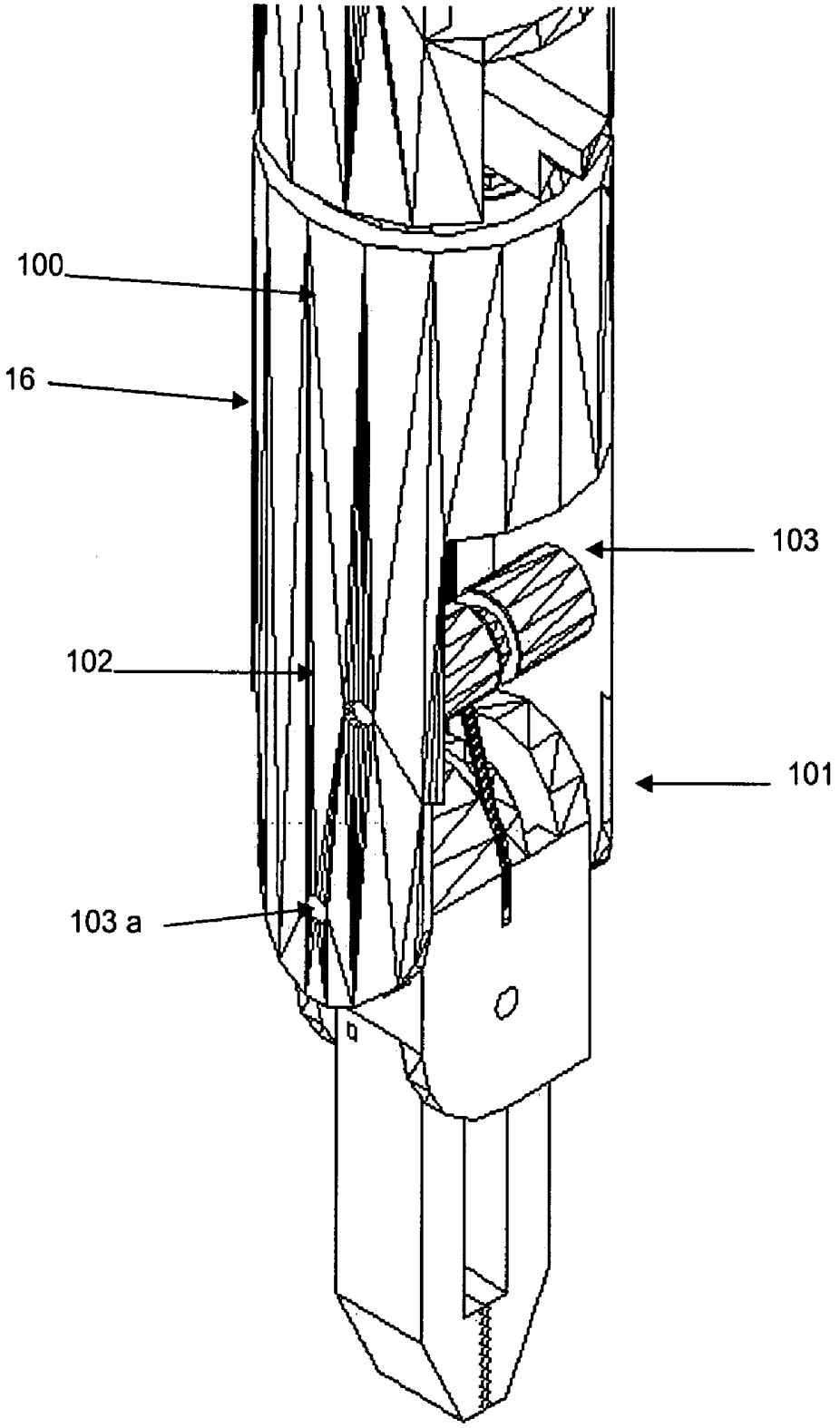

FIGURE 21

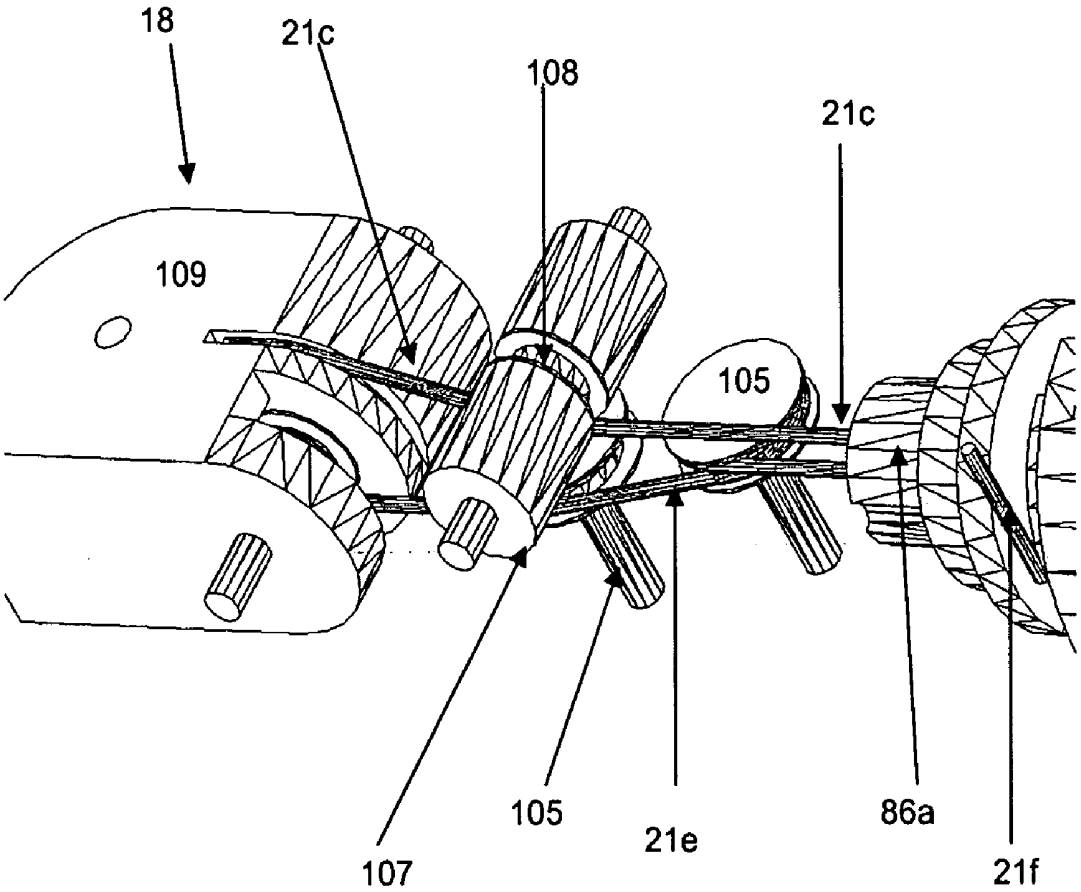

FIGURE 22

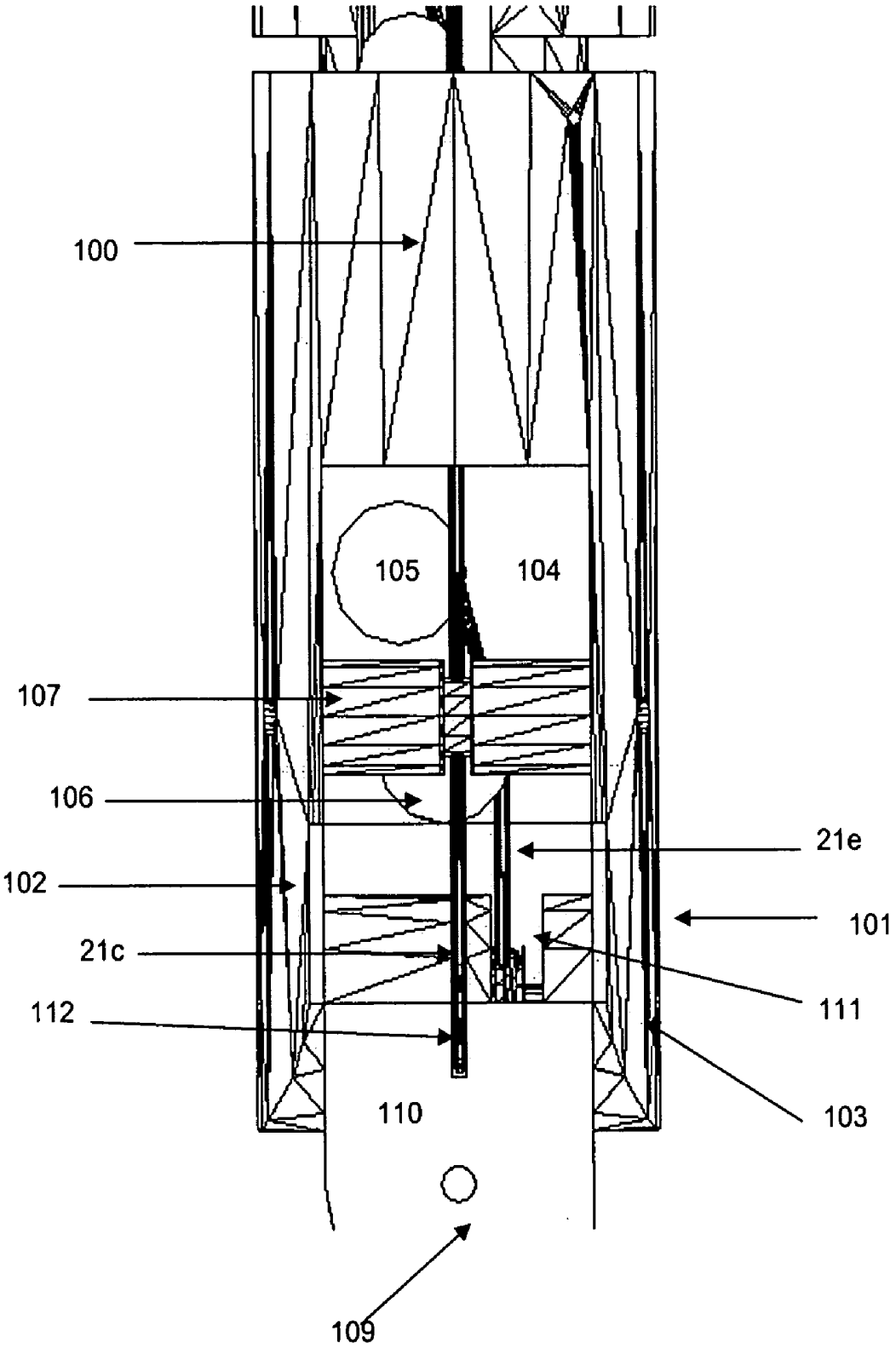

FIGURE 23

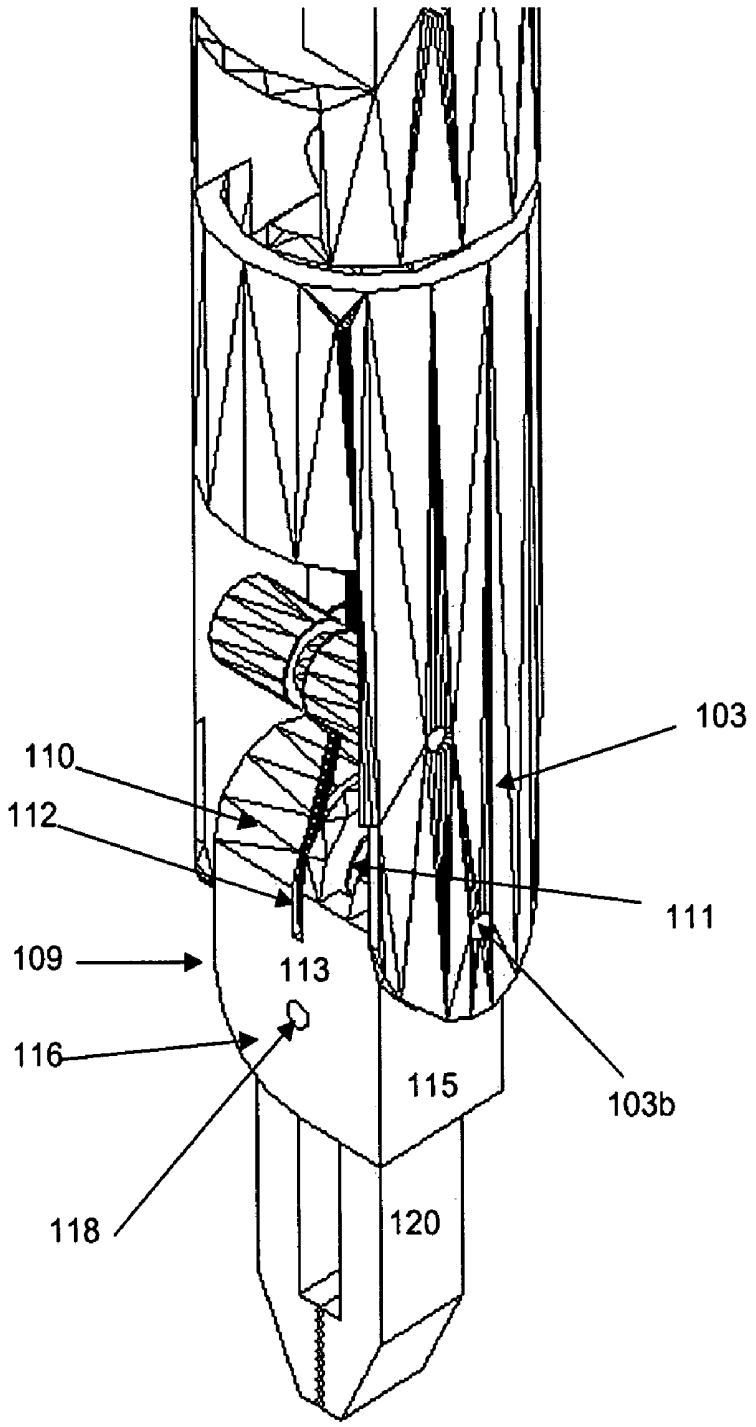

FIGURE 24

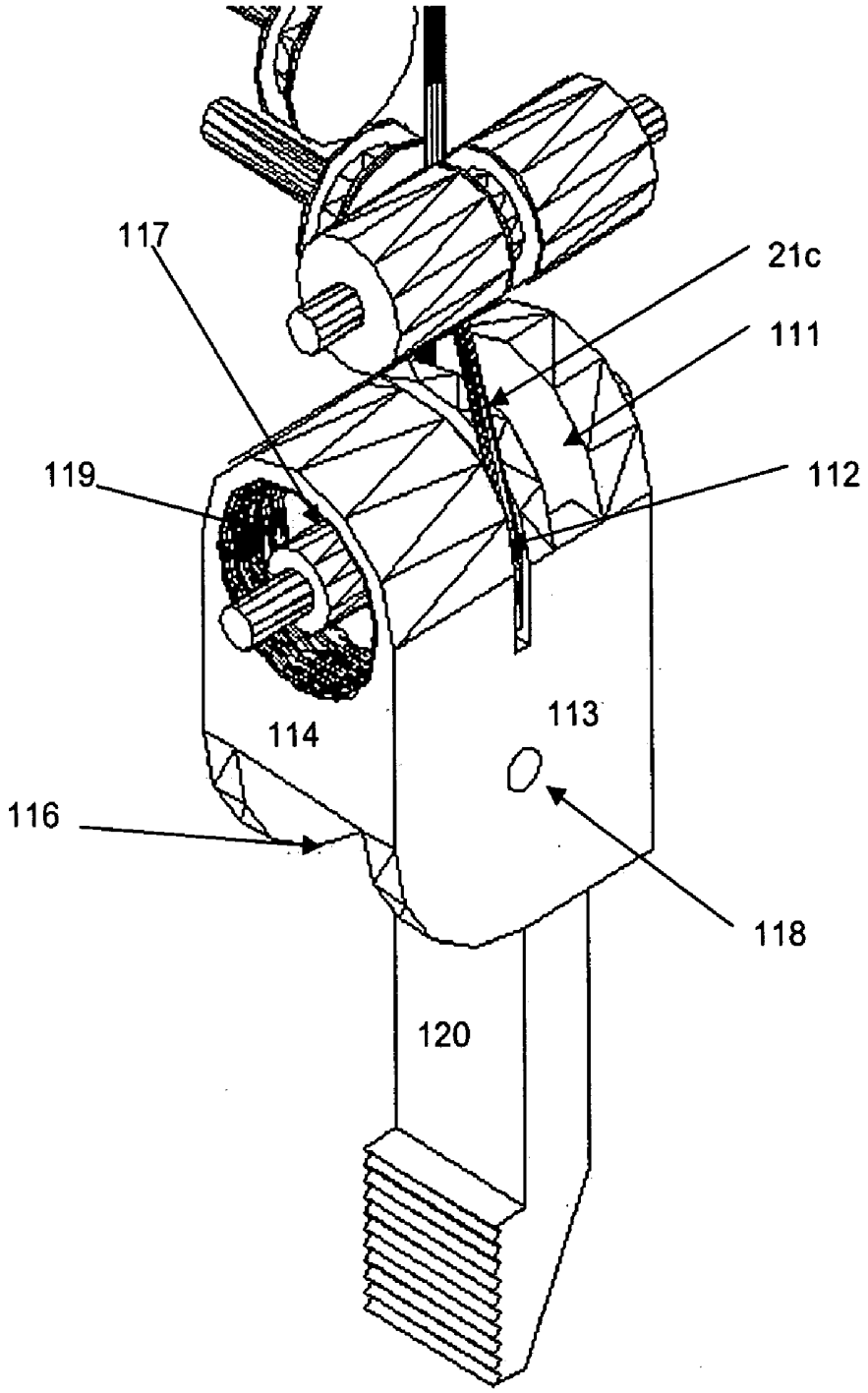

FIGURE 25

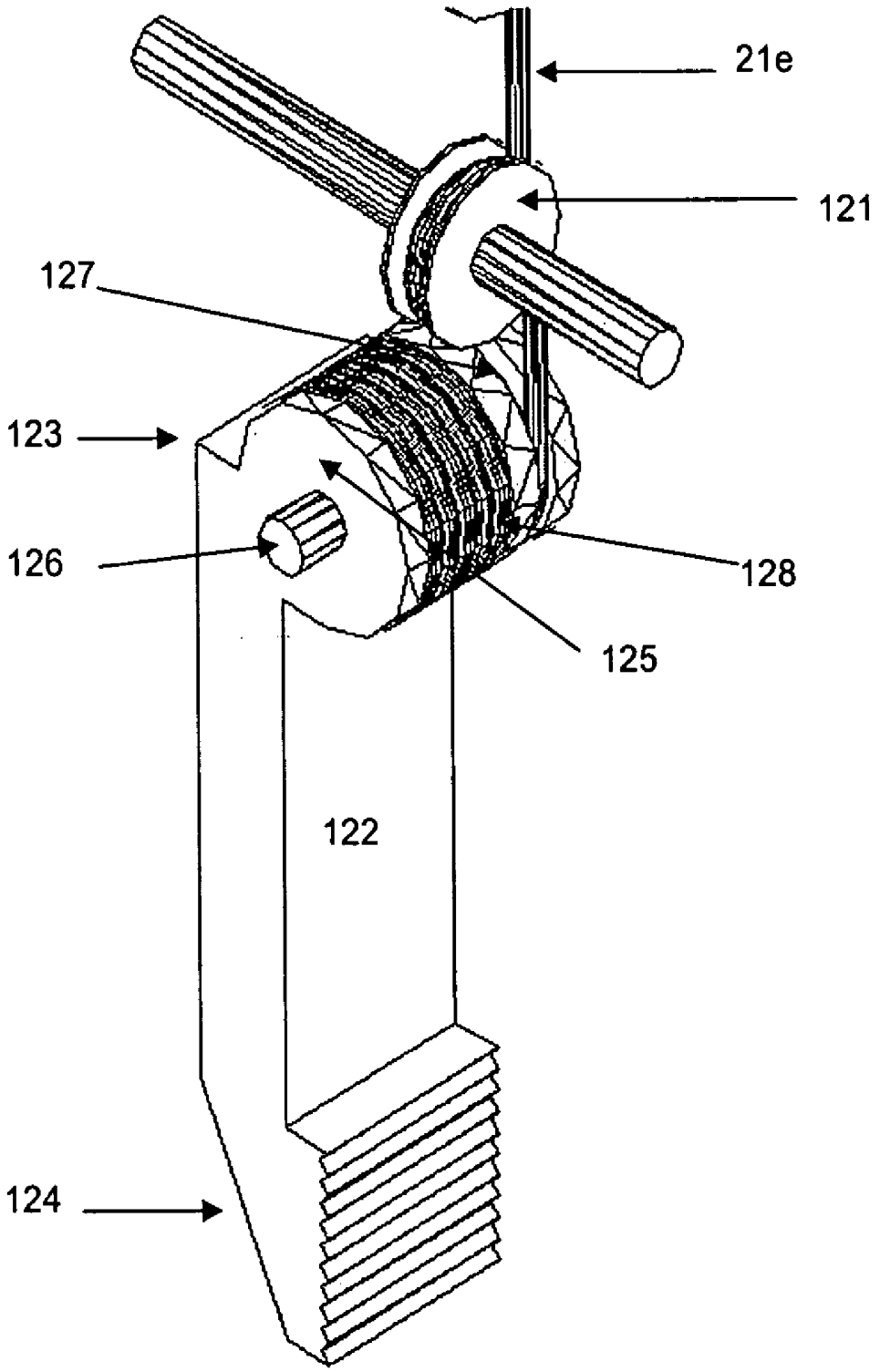

FIGURE 26

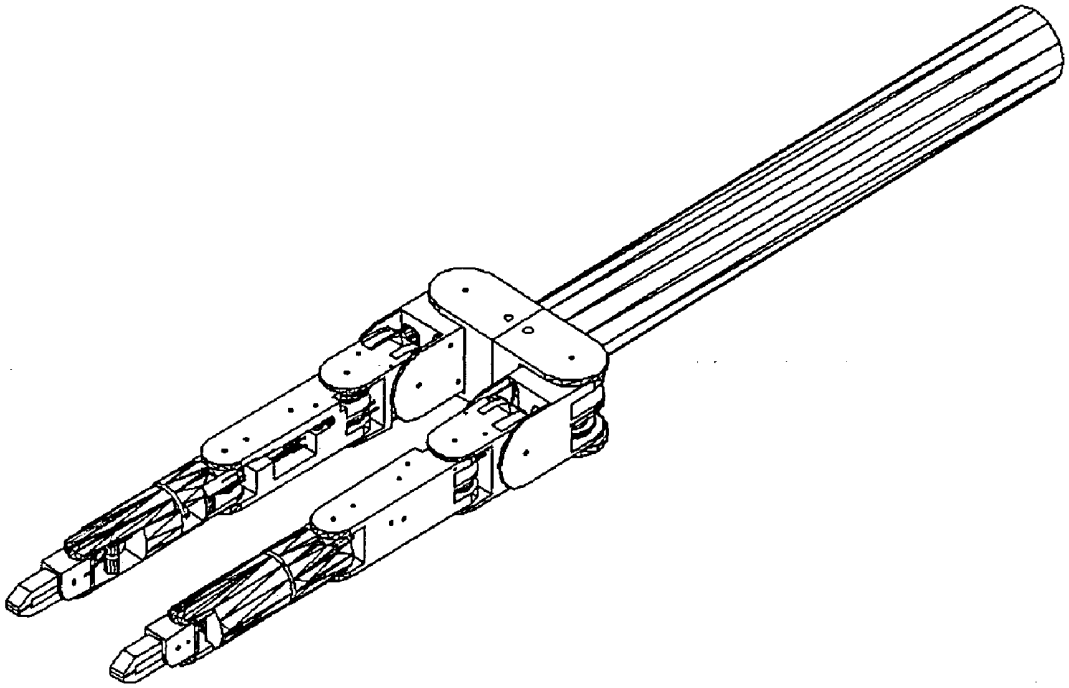

FIGURE 27

ROBOTIC SURGICAL DEVICE

BACKGROUND OF THE INVENTION

[0001] A. Field of the Invention

[0002] The present invention is related to robotic surgical devices, and more particularly to a robotic surgical device for using in laparoscopic surgery which includes two robotic arms and a respective griping tool each reproducing the natural movements of the human arm.

[0003] B. Description of the Related Art

[0004] The laparoscopic surgery systems available today including a robotic arm, have limited degrees of movement, which are reduced to simulate only some movements of the human wrist.

[0005] Said limited degree of movements limit the number of maneuvers that can be done during a surgery, Furthermore, the device that is introduced in the patients body normally have only one robotic arm at a distal portion, and since some procedures such as tissue cutting or suture procedures need at least two robotic arms, it is necessary to practice two or more incisions in patient's body in order to introduce an additional arm having a corresponding griping tool thus complicating the whole surgery procedure.

[0006] Consequently, surgeons are required to take a training procedure which may take a time of-one year in order to be qualified to operate a specific device.

[0007] There have been developed some devices which try to address the above referred problem such as U.S. patent application No. US2005/0096502, which describes "a robotic surgical device configured for performing minimally invasive surgical procedures. The robotic surgical device comprises an elongated body for insertion into a patient's body through a small incision. In one variation, the elongated body houses a plurality of robotic arms. Once the distal portion of the elongated body is inserted into the patient body, the operator may then deploy the plurality of robotic arms to perform surgical procedures within the patient's body. An image detector may be positioned at the distal portion of the elongated body or on one of the robotic arms to provide visual feedback to the operator of the device. In another variation, each of the robotic arms comprises two or more joints, allowing the operator to maneuver the robotic arms in a coordinated manner within a region around the distal end of the device".

[0008] Although the above referred device provides two parallel robotic arms, it doesn't describe a detailed implementation of the robotic arms for the device nor a specific preferred embodiment for a robotic arm including a specific number of joints, driving means, etc.

[0009] Therefore, applicant's developed a specific implementation of a robotic surgical device for using in laparoscopic surgery, including two robotic arms each having at least six joints providing a total of fourteen degrees of movement that accurately reproduce the movements of a human torso complete with arms.

[0010] Applicant's device includes a torso, two superior extremities each having a shoulder, arm, elbow, forearm, wrist and "hand".

[0011] Since applicant's device simulates the movements of the upper human extremities, it is easier for the surgeon to control the device since it can be maneuvered using the same movements learned during the standard training.

SUMMARY OF THE INVENTION

[0012] It is therefore a main object of the present invention to provide a robotic surgical device for using in laparoscopic surgery, including two robotic arms each having at least six joints.

[0013] It is another main object of the present invention to provide a robotic surgical device of the above disclosed nature which have least six joints providing a total of fourteen degrees of movement that accurately reproduce the movements of a human torso complete with arms.

[0014] It is a further object of the present invention to provide a robotic surgical device of the above disclosed nature which accurately reproduces the movements of a human torso complete with arms.

[0015] It is a further object of the present invention to provide a robotic surgical device of the above disclosed nature which simulates the movements of the upper human extremities, thus allowing the surgeon to control the device since it can be maneuvered using the same movements learned during the standard training.

[0016] These and other objects and advantages of the robotic surgical device of the present invention will become apparent to those persons having an ordinary skill in the art, from the following detailed description of the embodiments of the invention which will be made with reference to the accompanying drawings.

BRIEF DESCRIPTION OF THE DRAWINGS

[0017] FIG. **1** is a perspective view of the robotical surgical device of the present invention including both robotic arms.

[0018] FIG. **2** is a perspective view of the seven stepper motors and movement transmission cables mounted over its base.

[0019] FIG. **3** is a close up perspective view of the seven stepper motors and movement transmission cables mounted over its base.

[0020] FIG. **4** is a close up perspective view of the first, second and third connection elements and movement transmission cables of the second robotic arm.

[0021] FIG. **5** is a partially disembodied view of the first connection element of the second robotic arm showing the circular spring.

[0022] FIG. **6** is a close up disembodied perspective view of the first, second and third connection elements and movement transmission cables of the second robotic arm showing its internal components.

[0023] FIG. **7** is a is a close up disembodied frontal view of the first, second and third connection elements and movement transmission cables of the second robotic arm showing its internal components.

[0024] FIG. **8** is a close up partially disembodied perspective view of the first, second and third connection elements and movement transmission cables of the second robotic arm showing the internal components of the first and second connection element.

[0025] FIG. **9** is a close up perspective view of the third and fourth connection elements.

[0026] FIG. **10** is a close up front view of the third and fourth connection elements.

[0027] FIG. **11** is a close up partially disembodied perspective view of the third and fourth connection elements showing the circular spring of the fourth connection element.

[0028] FIG. **12** is a close up partially disembodied perspective view of the third and fourth connection elements showing the internal components of the fourth connection element.

[0029] FIG. **13** is a close up partially disembodied frontal view of the third and fourth connection elements showing the internal components of the fourth connection element.

[0030] FIG. **14** is a close up perspective view of the fifth connection element connected to the fourth and sixth connection elements.

[0031] FIG. **15** is a close up perspective view of the fifth connection element showing the cylindrical linking member.

[0032] FIG. **16** is a close up partially disembodied perspective view of the fourth and fifth element showing the circular spring of the fifth connection element.

[0033] FIG. **17** is a close up disembodied front view of the fifth connection element showing its internal components.

[0034] FIG. **18** is a close up frontal view of the second end of the fifth connection element partially showing its internal components.

[0035] FIG. **19** is a close up left lateral disembodied view of the fifth connection element showing its internal components.

[0036] FIG. **20** is a close up partially disembodied perspective view of the fourth, fifth and sixth element showing the internal elements of the fifth connection element.

[0037] FIG. **21** is a close up left perspective view of the sixth connection element and griping tool.

[0038] FIG. **22** is a close up perspective partially disembodied view of the fifth, sixth and griping tool showing the internal components of the sixth connection element.

[0039] FIG. **23** is a close up frontal view of the sixth connection element and griping tool partially showing the internal elements of the sixth connection element.

[0040] FIG. **24** is a **21** is a close up right perspective view of the sixth connection element and griping tool.

[0041] FIG. **25** is a close up partially disembodied perspective view of the sixth connection element and griping tool lacking the fixed plier showing the internal components of the second end of the sixth connection element, and the circular spring located at a first end of the griping tool hollow main body.

[0042] FIG. **26** is a close up disembodied perspective view of the griping tool showing only the fixed plier and its internal components.

[0043] FIG. **27** is a perspective view of the robotical surgical device of the present invention including both robotic arms in an extended position ready for entering to a patient's body trough a surgical incision.

DETAILED DESCRIPTION OF THE INVENTION

[0044] The robotical surgical device of the present invention will be described making reference to the X-Y-Z axis wherein the X axis corresponds to the left and right directions, the Y axis corresponds to the up and down directions and the Z axis corresponds to the front and rear directions.

[0045] Now the robotical surgical device will be described in accordance with its more general embodiment thereof, comprising:

[0046] support means comprising a long elongated and hollow member **1** having first **2***a* and a second **3** end;

[0047] a first **4** and a second **5** robotic arm each positioned in a parallel relationship from each other, each comprising:

[0048] a first connection element **6** fixedly attached to the second end of the support means having pivoting linking means **7**, wherein the resting position for this element comprises a position parallel to the X axis;

[0049] a second connection element **8**, pivotally linked to the pivoting linking means of the first connection element **6**, said second connection element **8** able to pivot up to 90^0 to the front until reaching a position parallel to the Z axis and to a side until reaching a position parallel to the X axis, taking as reference the first connection element **6** resting position, having pivoting linking means **9** allowing an forward and backward pivoting movement and wherein the resting position comprises the position parallel to the X axis;

[0050] a third connection element **10**, pivotally linked to the pivoting linking means of the second connection element, said third connection element **10** able to pivot up to 90^0 upwards until reach an horizontal position parallel to the X axis and downwards until reach a vertical position parallel to the Y axis, taking as reference the second connection element resting position, having pivoting linking means **11** allowing an upward and downward pivoting movement, and wherein the resting position comprises the position parallel to the Y axis;

[0051] a fourth connection element **12**, pivotally linked to the pivoting linking means of the third connection element, said fourth connection element able to pivot up to 90^0 upwards until reach an horizontal position parallel to the Z axis and downwards until reach a vertical position parallel to the Y axis, taking as reference the third connection element resting position, having pivoting linking means **13** allowing an upward and downward pivoting movement, and wherein the resting position comprises the position parallel to the Y axis;

[0052] a fifth connection element **14**, pivotally linked to the pivoting linking means of the fourth connection element, said fifth connection element able to pivot up to 90^0 upwards until reach an horizontal position parallel to the Z axis and downwards until reach a vertical position parallel to the Y axis, taking as reference the fourth connection element resting position, having rotating linking means **15** for linking an additional connection element, allowing concentric rotation over a single axis, and wherein the resting position comprises the position parallel to the Y axis;

[0053] a sixth connection element **16**, rotary linked to the rotating linking means **15** of the fifth connection element **14**, said sixth connection element **16** able to rotate 360° over its own axis, having pivoting linking means for linking a further element **17** allowing an upward and downward pivoting movement, and wherein the resting position for this element comprises the position parallel to the Y axis;

[0054] a griping tool **18**, pivotally linked to the pivoting linking means of the sixth connection element **16**, said griping tool **18** able to pivot up to 90° upwards until reach an horizontal position parallel to the Z axis and downwards until reach a vertical position parallel to the

Y axis, taking as reference the sixth connection element resting position, and wherein the resting position for the gripping tool comprises the position parallel to the Y axis; and

[0055] driving means connected to each connection element and griping tool for driving each of the sixth connection elements and to open and close the griping tool.

[0056] Thanks to the pivotal connections between each connection element, the griping tool **18** of each robotic arm is able to move inside a very ample operational area, which mimics the functionality of a human torso including hands.

[0057] Now the robotical surgical device of the present invention will be described making reference to a preferred embodiment thereof, comprising:

[0058] support means comprising an elongated hollow cylinder **1** having a first **2***a* and a second end **3** and having a diameter size adequate for entering trough a standard sized laparoscopic surgical opening;

[0059] a first **4** and a second **5** robotic arm each positioned in a parallel relationship from each other;

[0060] driving means for driving both robotic arms, comprising: a first **19** and a second group (not shown) of seven stepper motors, each group attached to a base **19***a* and driving a correspondent robotic arm, wherein the motors of each group are aligned in two parallel rows and wherein each motor drives a rotary pulley **20** located at a superior portion thereof;

[0061] movement transmission means for each stepper motor, each comprising a cable (**21***a*, **21***b*, **21***c*, **21***d*, **21***e*, **21***f*, **21***g*) attached to the pulley of a respective motor for a total of fourteen cables (only seven shown) divided in two groups of seven cables, each group corresponding to a robotic arm **4**, **5**, wherein each of the cables attached to its respective pulley **20**, passes by a correspondent series of circular groves **22**, each located at subsequent pulleys **20**, thus lineally guiding each cable along subsequent pulleys **20** so that a first pulley has one circular grove, the second pulley has two circular groves, one for its own cable and one for the passing cable of the previous pulley **20** and so on, thus avoiding the entanglement of the cables as shown in FIG. **3**, and wherein each cable is pulled when the pulley **20** rotates in one direction and is loosen when the pulley **20** rotates in an opposed direction, and wherein both groups of cables are aligned and conducted trough the elongated cylinder **1** entering a first end **2***a* and exiting trough the second end **3** thereof;

[0062] wherein each robotic arm comprising:

[0063] a first connection element **6** comprising a hollow quadrangular member having a first **23** and a second (not shown) longitudinal wall, a central longitudinal axis, a first end **24** and a second open rounded end **25**, including a first **25***a* and a second (not shown) pin holes located at each longitudinal wall near the first end **24** of the first connection element **6**, a rectangular aperture **26** at a lateral side near the first end **24**, said first connection element **6** been fixedly attached to the second end **3** of the hollow elongated cylinder **1** in such way that its longitudinal axis is located perpendicularly to the hollow cylindrical tube and the lateral rectangular aperture **26** coincide with the second end **3** of the hollow cylindrical tube **1** and having:

[0064] a rotating sluing drum **27** including a pin **27***a*, **27***b* at each end, each pin rotary received inside the pin holes **25***a* so that the ends of the first rotary sluing drum **27** are rotary linked to both longitudinal walls **23** and located between them inside the first connection element **6** near its first end **24** and aligned with its central longitudinal axis, having seven concentric circular grooves **28***a*, **28***b*, **28***c*, **28***d*, **28***e*, **28***f*, **28***g;*

[0065] a first **29** and a second (not shown) opposed pin holes each located at a correspondent longitudinal wall **23** near the second end **25** of the first connection element **6**, each aligned with the central longitudinal axis;

[0066] wherein the first corresponding group of cables **21***a*, **21***b*, **21***c*, **21***d*, **21***e*, **21***f*, **21***g* enter the first connection element **6** trough the rectangular aperture **26**, each passing by the sluing drum **27** and guided by a respective concentric circular groove **28***a*, **28***b*, **28***c*, **28***d*, **28***e*, **28***f*, **28***g* and exiting the first connection element **6** trough the second open end **25**; and

[0067] wherein the resting position for this element comprises a position parallel to the X axis;

[0068] a second connection element **8** including a first open end **29***a* and a second open end **30**, and a central portion **31** including a first (not shown) and a second **32** passage, wherein the first end **29***a* including a superior rounded longitudinal wall **33** having a central superior circular recess **34**, a central rounded longitudinal wall **35**, and an inferior rounded longitudinal wall **36**, each depending from the central portion **31** and each including a central coincident pin hole (not shown), wherein the pin hole of the superior rounded longitudinal wall **33** is located at a central portion of the circular recess **34** and wherein the second open end **30** includes a first rounded lateral wall **37** and a second opposed rounded lateral wall **38** each extending from the central portion **31** and each respectively having a first (not shown) and a second **39** pin hole at a central portion thereof, said second connection element **8** further having:

[0069] six pulleys **40** having a central perforation (not shown), each one located below the other forming a vertical row, and wherein a first **40***a*, second **40***b* and third pulley **40***c* are located and rotary retained between the superior rounded longitudinal wall **33** and the central rounded longitudinal wall **35**, and a fourth **40***d*, fifth **40***e* and sixth **40***f* pulley are located and rotary retained between the central rounded longitudinal wall **35** and the inferior **36** rounded longitudinal wall;

[0070] a pin **41** passing trough the pin hole of the superior rounded longitudinal wall **33**, trough the central perforation of the first **40***a*, second **40***b* and third **40***c* pulley, trough the pin hole of the central rounded longitudinal wall **35**, through the central perforation of the fourth **40***d*, fifth **40***e* and sixth **40***f* pulley and trough the pinhole of the inferior rounded longitudinal wall **36**, thus rotary retaining the six pulleys **40** and wherein the pin protrudes over the pinhole of the superior rounded longitudinal wall **33** and below the inferior rounded longitudinal wall **36**;

[0071] a circular spring **42** tightly received inside the circular recess **34** located at the superior rounded longitudinal wall **33**;

[0072] wherein a first **21***a*, second **21***b* and third **21***c* cable exiting the first connection element **6** each enters the second connection element **8** trough the first open end **29***a* and passes by and surrounds a correspondent first **40***a*, second **40***b* and third **40***c* pulley and are guided through the first passage of its central portion **31** to the second open end **30** trough which they exit the second connection element **8** and

wherein a fifth **21***e*, sixth **21***f*, and seventh **21***g* cable exiting the first connection element **6**, enters the second connection element **8** trough the first open end **29***a* and passes by and surrounds a correspondent fourth **40***d*, fifth **40***e* and sixth **40***f* pulley and are guided through the second passage **32** of its central portion **31** to the second open end **30** trough which they exit the second connection element **8**;

[0073] wherein a fourth cable **21***d* is linked to the central portion **31** of the second connection element **8**, thus connecting the second connection element **8** directly to a fourth stepper motor, thus driving the second connection element **8**;

[0074] wherein the second connection **8** element is pivotally retained inside the second open rounded end **25** of the first **6** connection element by locking the portions of the pin **41** protruding over the superior rounded longitudinal wall **33** and below the inferior rounded longitudinal **36** wall inside the first **29** and second pin holes located at a correspondent longitudinal wall **23**, **25** of the first connection element **6** in such way that the whole first end **29***a* of the second connection element **8** including the superior **33**, central **35** and inferior **36** rounded longitudinal walls and pulleys **40** are retained between the first **23** and second longitudinal walls in such way that said second connection element **8** is able to pivot up to 90° to the front until reaching a position parallel to the Z axis and to a side until reaching a position parallel to the X axis, taking as reference the first connection element **6** resting position, when the fourth stepper motor pulls the fourth cable **21***d* linked to the second connection element **8** and wherein the resting position for this element comprises the position parallel to the X axis;

[0075] wherein the circular spring **42** remains tightly retained between the first longitudinal wall **23** inferior portion of the first connection element **6** and the circular recess **34** of the superior rounded longitudinal wall **33** of the second connecting element **8** thus applying a torsional force over said two elements, forcing the second connecting element **8** to return to its resting position; and

[0076] further including a first **43** and a second **44** lateral pulley each respectively linked at a superior and inferior portion of the first **37** and second **38** rounded lateral wall between them and inside the second open end **30** of the second connection element **8**, and wherein the seventh cable **21***g* passing trough the second passage **32** passes by said first **43** and second **44** lateral pulley before emerging from the second connection element **8** by the second open end **30**;

[0077] a third connection element **10** including a first open end **45** and a second open end **46**, and a central portion **47** including a first and a second passage (not shown) wherein the first end **45** including a first rounded longitudinal wall **48** having a central superior circular recess **49**, a central rounded longitudinal wall **50**, and an third rounded longitudinal wall **51**, each depending from the central portion **47** and each including a central coincident pin hole (not shown), wherein the pin hole of the first rounded longitudinal wall **48** is located at a central portion of the circular recess **49** and wherein the second open end **46** includes a first rounded lateral wall **52** and a second rounded lateral wall **53** each extending from the central portion **47** and including a correspondent first **54** and a second (not shown) pin holes, and having:

[0078] five pulleys **55** having a central perforation (not shown), each one located below the other forming a linear row, and wherein a first **55***a* and second **55***b* pulley are located and rotary retained between the first rounded longitudinal wall **48** and the central rounded longitudinal wall **50**, and a third **55***c*, fourth **55***d* and fifth **55***e* pulley are located and rotary retained between the central rounded longitudinal wall **50** and the third rounded longitudinal wall **51**;

[0079] a pin **56** passing trough the pin hole of the first rounded longitudinal wall **48**, trough the central perforation of the first **55***a* and second **55***b* pulley, trough the pin hole of the central rounded longitudinal wall **50**, through the central perforation of the third **55***c*, fourth **55***d* and fifth **55***e* pulley and trough the pinhole of the third rounded longitudinal wall **51** in that order, thus rotary retaining the five pulleys **55** and wherein the pin **56** protrudes over the pinhole of the first rounded longitudinal wall **48** and below the third rounded longitudinal wall **51**;

[0080] a circular spring **57** tightly received inside the circular recess **49** located at the first rounded longitudinal wall **48**;

[0081] wherein a fifth **21***e*, and a sixth **21***f* cable exiting the second connection element **8** each enters the third connection element **10** trough the first open end **45** and passes by and surrounds a correspondent second **55***b*, and first **55***a* pulley and are guided through the first passage of its central portion **47** to the second open end **46** trough which they exit the third connection element **10** and wherein a first **21***a*, second **21***b* and third **21***c* cable exiting the second connection element **8**, enters the third connection element **10** trough the first open end **45** and passes by and surrounds a correspondent fifth **55***e*, fourth **55***d* and third **55***c* pulley and are guided through the second passage of its central portion **47** to the second open end **46** trough which they exit the third connection element **10**;

[0082] wherein a seventh cable **21***g* is linked to the central portion **47** of the third connection element **10**, thus connecting the third connection element directly to a seventh stepper motor, thus driving the third connection element **10**;

[0083] wherein the third connection element **10** is pivotally retained inside the second open end **30** of the second connection element **10** by locking the portions of the pin **56** protruding over the first rounded longitudinal wall **48** and below the third rounded longitudinal wall **51** inside the first and second **39** pin hole located at a correspondent second open end **30** rounded lateral wall **37**, **38** of the second connection element **8** in such way that the whole first end **45** of the third connection element **10** including the first **48**, central **50** and third **51** rounded longitudinal walls and pulleys **55** are retained between the first **37** and second **38** rounded longitudinal walls in such way that said third connection element **10** is able to move up to 90^0 upwards until reach an horizontal position parallel to the X axis and downwards until reach a vertical position parallel to the Y axis, taking as reference the second connection element **8** resting position, when the seventh stepper motor pulls the seventh cable **21***g* linked to the third connection element **10** and wherein the resting position comprises the position parallel to the Y axis; and

[0084] wherein the circular spring **57** remains tightly retained between an internal face of the second rounded lateral wall **38** of the second connection element **8** and the circular recess **49** of the first rounded longitudinal wall **48** of the third connecting element **10** thus applying a torsional force over said two elements, forcing the third connecting element **10** to return to its resting position;

[0085] a fourth connection element **12** including a first open end **58** and a second **59** open end, and an elongated

central portion **60** including a first and a second passage (not shown) and a central path **61** having a longitudinal axis defined by a first **62** and a second **63** lateral wall and by an "inferior" longitudinal wall **64**, wherein the first end **58** including a first rounded lateral wall **65** having a central superior circular recess **66**, a central rounded lateral wall **67**, and an third rounded lateral wall **68**, each depending from the central portion **60** and each including a central coincident pin hole (not shown), wherein the pin hole of the superior rounded longitudinal wall is located at a central portion of the circular recess **66** and wherein the second open end **59** includes a first rounded lateral wall **69** and a second rounded lateral wall **70** extending from the central portion each having a central pin hole **70***a* (only the pin hole of the second rounded lateral wall **70** shown), and having:

[0086] four pulleys **71** having a central perforation (not shown), each one located below the other forming a linear row, and wherein a first **71***a* and a second pulley **71***b* are located and rotary retained between the first end **58** first rounded lateral wall **65** and the first end central rounded longitudinal wall **67**, and a third **71***c* and fourth **71***d* pulley are located and rotary retained between the first end central rounded longitudinal wall **67** and the first end third rounded longitudinal wall **68**;

[0087] a pin **72** passing trough the pin hole of the first end first rounded longitudinal wall **65**, trough the central perforation of the first **71***a* and second **71***b* pulley, trough the pin hole of the first end central rounded longitudinal wall **67**, through the central perforation of the third **71***c* and fourth pulley **71***d* and trough the pinhole of the first end third rounded longitudinal wall **68** in that order, thus rotary retaining the four pulleys **71** and wherein the pin **72** protrudes over the first end first rounded longitudinal wall **65** and below the first end third rounded longitudinal wall **68**;

[0088] a circular spring **73** tightly received inside the circular recess **66** located at the first end first rounded longitudinal wall **65**;

[0089] wherein a sixth **21***f* and fifth **21***e* cable exiting the third connection element **10** each enters the fourth connection element **12** trough the first open end **58** and passes by and surrounds a correspondent first **71***a* and second **71***b* pulley and are guided through the first passage of the central portion **60** across the central path **61** to the second open end **59** trough which they exit the fourth connection element **12** and wherein a second **21***b* and third **21***c* cable exiting the third connection element **10**, enters the fourth connection element **12** trough the first open end **58** and passes by and surrounds a correspondent fourth **71***d* and third **71***c* pulley and are guided through the first passage of the central portion **60** across the central path **61** to the second open end **59** trough which they exit the fourth connection element **12**;

[0090] wherein a first cable **21***a* is linked to the first end third rounded lateral wall **68** of the fourth connection element, thus connecting the fourth connection element directly to the first stepper motor, thus driving the fourth connection element;

[0091] wherein the fourth connection element **12** is pivotally retained inside the second open end **46** of the third connection element **10** by locking the portions of the pin **72** protruding over the first end first rounded lateral wall **65** and below the first end third rounded longitudinal wall **68** inside the first **54** and second pin holes located at a correspondent second open end first **52** and second **53** rounded lateral wall of the third connection element **10** in such way that the whole first end **58** of the fourth connection element **12** including the first **65**, central **67** and third **68** rounded longitudinal walls and pulleys **71** are retained between the second end first **52** and second **53** longitudinal walls in such way that said fourth connection element **12** is able to move up to 90^0 upwards until reach an horizontal position parallel to the Z axis and downwards until reach a vertical position parallel to the Y axis, taking as reference the third connection element **10** resting position, when the first stepper motor pulls the first cable **21***a* linked to the fourth connection element **12** and wherein the resting position for the fourth connection element **12** comprises the position parallel to the Y axis;

[0092] wherein the circular spring **73** remains tightly retained between an internal face of the second end first rounded lateral wall **52** of the third connection element **10** and the circular recess **66** of the first end first rounded lateral wall **65** of the fourth connecting element **12** thus applying a torsional force over said two elements, forcing the fourth connecting element **12** to return to its resting position; and

[0093] further including:

[0094] a first sluing drum **74** having a first and a second end, and a longitudinal axis, wherein said first sluing drum is rotary and transversally retained inside the central path **61** in such way that both ends are rotary retained between the lateral walls **62**, **63** of the central path **61** with its longitudinal axis being located perpendicularly to the central path longitudinal axis and having one circular grove **75**;

[0095] a second sluing drum **76** having a first and a second end, and a longitudinal axis, wherein said second sluing drum **76** is rotary and transversally retained inside the central path **61** in such way that both ends are rotary retained between the lateral walls **62**, **63** of the central path **61** with its longitudinal axis being located perpendicularly to the central path longitudinal axis and having a three circular groves **77***a*, **77***b*, **77***c;*

[0096] a first pulley **78**, having a central elongated member axis including a first end and a second end which is joined to the center of the pulley, wherein the first end of the axis member is rotary retained to the inferior longitudinal wall **64** of the central path **61** in such way that it is positioned in a perpendicularly relationship with respect to the central path longitudinal axis;

[0097] a second pulley **79**, having a central elongated member axis including a first end and a second end which is joined to the center of the pulley, wherein the first end of the axis member is rotary retained to the second longitudinal wall **64** of the central path **61** in such way that it is positioned in a perpendicularly relationship with respect to the central path longitudinal axis;

[0098] a third pulley **80**, having a central elongated member axis including a first end and a second end which is joined to the center of the pulley, wherein the first end of the axis member is retained to both lateral walls **62**, **63** of the central path **61** in such way that it is positioned between them;

[0099] wherein the first sluing drum **74**, second sluing drum **76** and third pulley **80** are located along the central path **61** in said order in a zig-zag pattern and retained to both central path **61** lateral walls as described above;

[0100] wherein the first **78** and second **79** pulley are located along the central path **61** in said order in a zig-zag pattern and retained to the second central path **61** inferior longitudinal wall **64** as described above;

[0101] wherein the second cable **21***b* passing trough the central path **61**, passes by and surrounds the circular grove **75** of the first sluing drum **74** and passes by and surrounds the third pulley **78**;

[0102] wherein the third cable **21***c* passes by and surrounds a third circular groove **77***c* of the second sluing drum **76**, and passes by the second **78** and third **79** pulleys; and

[0103] wherein the fifth **21***e* and sixth **21***f* cable passes by and surrounds a correspondent circular grove **77***b*, **77***a* of the second sluing drum **76**;

[0104] a fifth connection element **14** including a first open end **81** and a second end **82** having a cylindrical shape, a circular cross section and a circular internal and external wall, an entrance opening, an exit opening, and a longitudinal and transversal axis, wherein the first end including a first rounded lateral wall **82**, and a second rounded longitudinal wall **83** having a central circular recess **84**, each depending from the second end circular wall and each including a central coincident pin hole (not shown), wherein the pin hole of the second rounded lateral wall is located at a central portion of the circular recess **85** and wherein the second end **82** includes cylindrical connection member **86** including an open transversal lateral housing **87** opened to the exterior of the rotary connection means **86** and a cylindrical linking member **86***a* having two circular passages **88***a*, **88***b*, and having:

[0105] a circular spring **89** tightly received inside the circular recess **85** located at the second rounded lateral wall **84**;

[0106] a first sluing drum **90** having a first and a second end, each including an elongated longitudinal axis member **90***a*, wherein the ends of the longitudinal axis member passes trough the pin hole of the first **83** and second **84** rounded lateral wall respectively, thus rotary and transversally retained between the first **83** and second **84** rounded longitudinal wall in a central portion thereof and including three circular groves **91***a*, **91***b*, **91***c*, and wherein each end of the elongated member axis protrudes over the pinhole of the first rounded lateral wall **83** and over the pinhole of the second rounded lateral wall **84**;

[0107] a second sluing drum **92** having a first and a second end, and a longitudinal axis, wherein said second sluing drum is rotary and transversally retained between the first **83** and second **84** rounded lateral wall and including one circular grove **93**, wherein the second sluing drum **92** is located next to the first sluing drum **90** in a parallel relationship and off center with respect to the longitudinal axis;

[0108] a third **94** and a fourth **96** sluing drums, each having a first and a second end and a circular grove **95** (only the circular grove of the third sluing drum shown), and each parallely located with respect to each other and aligned with respect to the transversal axis;

[0109] a first **97** and a second **98** pulley, each having a central elongated member axis including a first end and a second end which is joined to the center of the pulley **97**, **98**, wherein the first end of the axis member of the first pulley **97** is attached to the interior circular wall of the cylindrical connection member **86** and the first end of the axis member of the second pulley **98** is attached to the interior circular wall of the cylindrical linking member **86***a* in such way that each axis is positioned in a perpendicularly relationship with respect to the longitudinal axis, and in a parallel relationship with respect to the transversal axis, wherein the first pulley **97** including only one circular grove **97***a* and the second pulley **98** including a first **98***a* and a second **98***b* circular grove and wherein the first pulley **97** is located next to the third **94** and fourth **96** parallel sluing drums and wherein the second pulley **98** is located next to the first pulley **97**;

[0110] a third pulley **99** having a central elongated member axis including a first end and a second end which is joined to the center of the pulley, said third pulley rotary retained inside the open transversal lateral housing **87** wherein the first end of the axis member is retained to a wall of the open transversal lateral housing **87** in such way that it is positioned in a parallel relationship with respect to the longitudinal axis, and in a perpendicular relationship with respect to the transversal axis;

[0111] wherein a third cable **21***c* exiting the fourth connection element **12** enters the fifth connection element **14** trough the first open end **81** and passes by and surrounds a correspondent grove **91***c* of the first sluing drum **90** and third sluing drum **94** and is guided trough the cylindrical connection member **86** and cylindrical linking member **86***a* and exits the fifth connection element **14** trough the first circular passage **88***a;*

[0112] wherein a fifth cable **21***e* exiting the fourth connection element **12** enters the fifth connection element **14** trough the first open end **81** and passes by and surrounds the respective grove **91***b* of the first sluing drum **90** and second sluing drum **92** and is guided trough the cylindrical connection member **86** inside of which it passes by the first pulley **97** and the first grove **98***a* of the second pulley **98** and trough the cylindrical linking member and exits the fifth connection element **14** through the second circular passage **88***b;*

[0113] wherein the sixth cable **21***f* exiting the fourth connection element **12** enters the fifth connection element **14** trough the first open end **81** and passes by and surrounds a respective grove **91***a* of the first **90** and fourth **96** sluing drum and is guided through the cylindrical connection member **86** inside of which it passes by the first pulley **97**, trough the cylindrical linking member **86***a* inside of which it passes by the second grove **98***b* of the second pulley **98**, makes a turn of **900**, passes by the third pulley **99** and exits the fifth element **14** trough the open transversal lateral housing **87**;

[0114] wherein the second cable **21***b* exiting the fourth connection element **12** is linked to the first open end **81** second rounded lateral wall **84**;

[0115] wherein the fifth connection element **14** is pivotally retained inside the second open end **59** of the fourth connection element **12** by locking the ends of the elongated longitudinal axis member **90***a* protruding over the first rounded lateral wall **83** and over the second rounded lateral wall **84** inside the first and second **70***a* pin holes located at a correspondent second open end **59** rounded lateral wall **69**, **70** of the fourth connection element **12** in such way that the whole first end **81** of the fifth connection element **14** is retained between the second open end **59** first **52** and second **53** lateral walls so that said fourth connection element **12** is able to move up to 90° upwards until reach an horizontal position parallel to the Z axis and downwards until reach a vertical position parallel to the Y axis, taking as reference the fourth connection element **12** resting position, when the

second stepper motor pulls the second cable **21***b* linked to the first open end **81** second rounded lateral wall **84** and wherein the resting position for the fifth connection element comprises the position parallel to the Y axis; and

[0116] wherein the circular spring **89** remains tightly retained between an internal face of the second end **59** second rounded lateral wall **70** of the fourth connection element **12** and the circular recess **85** of the fifth connection element **14** second rounded lateral wall **84** thus applying a torsional force over said two elements, forcing the fifth connecting element **14** to return to its resting position;

[0117] a sixth connection element **16** including a longitudinal and transversal axis, a first open end **100** having a cylindrical shape and a circular cross section including a hollow rotary connection section (not shown) having a circular internal wall, rotary receiving and linking the cylindrical linking member **86***a* of the fifth connection element **14** thus rotary linking the fifth **14** and sixth **16** connection element, and a second open end **101** having a first rounded lateral wall **102**, a second rounded lateral wall **103** each including a central coincident pin hole **103***a*, **103***b* and an "inferior" longitudinal wall **104** each depending from the first open end **100**, and having:

[0118] a first pulley **105** having a central elongated member axis including a first end and a second end which is rotary joined to the center of the pulley, wherein the first end of the axis member is retained to the "inferior" longitudinal wall **104** in such way that its central elongated member axis is located perpendicularly to the longitudinal wall **104** and between both lateral walls **102**, **103**;

[0119] a second pulley **106** having a central elongated member axis including a first end and a second end which is rotary joined to the center of the pulley, wherein the first end of the axis member is retained to the "inferior" longitudinal wall **104**, next to the first pulley **105**, in such way that its central elongated member axis is located perpendicularly to the longitudinal wall **104** and between both lateral walls **102**, **103**;

[0120] a sluing drum **107** having a first and a second end, and a longitudinal axis, wherein said sluing drum is rotary and transversally retained between the lateral walls **102**, **103**, with its longitudinal axis being located perpendicularly to the sixth connection **16** element longitudinal axis and "over" both pulleys **105**, **106** and having one circular grove **108**;

[0121] wherein the sixth cable **21***f* which exits the fifth connection element **14** by open transversal lateral housing **87** of the Cylindrical connection member **86** which is received and rotary retained inside the hollow rotary connection section of the sixth connection element **16**, is linked to the circular internal wall of the sixth connection element **16** rotary connection section, thus connecting the sixth connection element **16** directly to a sixth stepper motor, so that when the stepper motor pulls the sixth cable **21***f*, it laterally pulls the sixth connection element **16** thus rotating it over the rotary connection which connects it to the fifth connection element **14**;

[0122] wherein the fifth cable **21***e* exiting the fifth connection element **14** enters the sixth connection element **16** trough the first open end **100**, passes by and surrounds the first pulley **105**, passes by the second pulley **106** thereafter and exits the sixth connection element **16** by the second open end **101**;

[0123] wherein the third cable **21***c* exiting the fifth connection element **14** enters the sixth connection element **16** trough the first open end **100** passes by the sluing drum **107** and exits the sixth connection element **16** by the second open end **101**; and

[0124] wherein the sixth connection element **16** is able to rotate over its own axis over the rotary connection as previously described, and is able to move up to 90° upwards until reach an horizontal position parallel to the Z axis and downwards until reach a vertical position parallel to the Y axis together with the fifth connection element **14**;

[0125] a griping tool **18** comprising:

[0126] a hollow main body **109** having a rectangular shape, including a first end **110** having a semi-cylindrical wall having a circular passage grove **111**, an elongated cable receiving section **112** including a passage (not shown) to the interior of the hollow main body **109** located next to the circular passage grove **111**, a first **113** and a second (not shown) longitudinal wall, a first **114** and a second **115** lateral walls, a hollow interior a second open end **116**, and a cable attaching element located (not shown) inside the hollow interior of the hollow main body **109** at a central portion thereof, wherein the first end of the hollow main body **109**, having a central superior circular recess **117** at the first lateral wall **114**, wherein the first end of the hollow main body **109** having a coincident pin hole (not shown) at each lateral wall **114**, **115**, wherein the pin hole of the first lateral wall **114** is located at a central portion of the circular recess **117**, and wherein the first **113** and second longitudinal walls each including a coincident perforation at a central portion thereof, and further having;

[0127] a circular spring **119** tightly received inside the circular recess **117** located at the first rounded lateral wall **114**;

[0128] a fixed plier **120**, joined and depending from the second lateral wall, first longitudinal wall **113** and second longitudinal wall **114**;

[0129] a pulley **121**, having a central elongated member axis including a first end and a second end which is joined to the center of the pulley, each one rotary retained inside the griping tool hollow main body **18** wherein the first and second end passes trough a respective perforation **103***a*, **103***b* of a respective lateral wall **114**, **115** and each one protruding over its respective lateral wall **114**, **115**, thus rotary joining the pulley **121** to the first and second lateral walls **114**, **115**, so that its elongated member axis is located parallel to both longitudinal walls **113** and perpendicularly to the lateral walls **113**, **114** and wherein it is positioned in such way that the pulley **121** is concentric with the first end **110** semi-cylindrical wall cross section and coinciding with the circular passage grove **111**;

[0130] a pivotal second plier **122**, having a first **123** and a second end **124**, wherein the first end **123** has a drum **125** including a first and a second end having a respective pin **126** (only the pin of the first end shown), a circular grove **127** near the second end and a longitudinal axis, wherein the drum is pivotally joined inside the hollow main body at a central portion thereof so that the pins of both ends **126** are pivotally retained inside a respective pin hole **118** of a respective longitudinal wall **113**, and thus pivotally linking the pivotal plier **122** and forming a complete and symmetrical pair of pliers **120**, **122** with the fixed plier **120**;

[0131] wherein the griping tool hollow main body **109** first end **110** is pivotally retained inside the second open end **101** of the sixth connection element **16** by locking the ends of the first and second end of the pulley **121** central elongated member axis protruding over the first **114** and second **115** lateral walls inside the first **103***a* and second **103***b* coincident pin holes located at a correspondent second open end **101** rounded longitudinal wall **102**, **103** of the sixth connection element **16** in such way that the whole first end **110** of the griping tool hollow main body **109** is retained between the first **113** and second **114** longitudinal walls in such way that said griping tool hollow main body **109** is able to move up to 90° upwards until reach an horizontal position parallel to the Z axis and downwards until reach a vertical position parallel to the Y axis, taking as reference the fifth connection element **14** resting position, and wherein the resting position for the griping tool **18** comprises the position parallel to the Y axis;

[0132] wherein the circular spring **119** remains tightly retained between an internal face of the first lateral wall **102** of the sixth connection element **16** and the circular recess **117** of the first lateral wall **114** of the griping tool **18** hollow main body **109** thus applying a torsional force over said two elements, forcing the griping tool **18** hollow main body to return to its resting position

[0133] wherein the third cable **21***c* exiting the sixth connection element **16** is received inside the elongated cable receiving section **112** and enters the griping tool **18** hollow main body **109** in order to be linked to the cable attaching element, thus connecting the griping element **18** hollow main body **109** directly to a third stepper motor, so that when the third stepper motor pulls the third cable **21***c*, it pulls the griping tool causing it to move up to 90^0 upwards until reach an horizontal position parallel to the Z axis;

[0134] wherein it is further included a circular spring **128** tightly retained around the drum **125** near its first end and between both griping tool **18** hollow main body **109** lateral walls **114**, **115**, thus forcing the pliers to open, which comprise its resting position.

[0135] wherein the fifth cable **21***e* exiting the sixth connection element **16** enters the griping tool **18** hollow main body **109** by the circular passage grove **111**, passes by the pulley **121** and is wound around the drum **125** of the pivotal plier **122**, thus directly connecting the fifth stepper motor to the pivotal plier **122**, so that when the fifth stepper motor pulls the fifth cable **21***e* it causes the drum of the pivotal plier **122** to rotate, thus pivoting the pivotal plier **122** and opening the pliers, wherein the resting position for the pliers is at a closed position;

[0136] A camera may be included in the second end of the support means hollow cylinder, thus allowing the surgeon to have an impeded view of both robotic arms inside the patient's body from a central rear perspective.

[0137] Although it was described that the means for driving each element comprises a system of cables and stepper motors, said means may be comprised by any other known means, such as a transmission system comprised by a plurality of gears.

[0138] Also, the invention is not limited to the above referred number of movable elements, since it may be comprised by a further number of movable elements thus increasing the flexibility and movement combinations the device is capable to achieve.

[0139] Each one of the stepper motors are connected to control means comprising a computer including a control interface for the surgeon such a pair of joysticks, control gloves or an upper limb exoskeleton for a more realistic control of both arms.

[0140] For performing a minimal invasive surgery using the device of the present invention, it is necessary to practice only one incision the enters the patient's body trough an incision by parallely extending both arms, thus reducing the diameter necessary for both arms to enter trough the incision as shown in FIG. **27**.

[0141] Furthermore, in combination with the robotic surgical device of the present invention, it is also provided a method for performing a minimal invasive surgery in a patient using the device of the present invention, wherein said method comprising the steps of:

[0142] making one incision in patient's body and preparing patient for a laparoscopic operation;

[0143] introducing trough said incision a robotic surgical device comprising two or more robotic arms each having: at least six connection elements including manipulating means; at least six joints; driving means connected to each connection element and to the manipulating means for moving each of the connection elements and the manipulating means and remote control means for each robotic arm; wherein each of the arms have at least fourteen degrees of movement; and

[0144] operating each robotic arm using the remote control means.

[0145] Finally it must be understood that the robotic surgical device of the present invention, is not limited exclusively to the embodiments above described and illustrated and that the persons having ordinary skill in the art can, with the teaching provided by the invention, to make modifications to the robotic surgical device of the present invention, which will clearly be within of the true inventive concept and of the scope of the invention which is claimed in the following claims.

What is claimed is:

1. A robotic surgical device comprising two or more robotic arms each having:

at least six connection elements and manipulation means;

at least six joints;

driving means connected to each connection element and to the manipulation means for moving each of the connection elements and the manipulation means;

wherein each of the arms have at least fourteen degrees of movement.

2. A robotic surgical device as claimed in claim **1**, wherein each robotic arm is joined to elongated support means.

3. A robotic surgical device as claimed in claim **1**, wherein the driving means are controlled by electronic control means.

4. A robotic surgical device as claimed in claim **1**, in which the manipulating means comprise a griping tool.

5. A robotic surgical device as claimed in claim **1**, including driving means for each connection element.

6. A robotic surgical device as claimed in claim **1**, wherein the support means comprising a long elongated and hollow member having first and a second end.

7. A robotic surgical device as claimed in claim **1**, further including a camera.

8. A robotic surgical device as claimed in claim **1**, comprising a first and a second robotic arm each positioned in a parallel relationship from each other, each comprising:

a first connection element fixedly attached to the support means having pivoting linking means, wherein the resting position for this element comprises a position parallel to the X axis;

a second connection element, pivotally linked to the pivoting linking means of the first connection element, said second connection element able to pivot up to 90° to the front until reaching a position parallel to the Z axis and to a side until reaching a position parallel to the X axis, taking as reference the first connection element resting position, having pivoting linking means allowing an forward and backward pivoting movement and wherein the resting position comprises the position parallel to the X axis;

a third connection element, pivotally linked to the pivoting linking means of the second connection element, said third connection element able to pivot up to 90° upwards until reach an horizontal position parallel to the X axis and downwards until reach a vertical position parallel to the Y axis, taking as reference the second connection element resting position, having pivoting linking means allowing an upward and downward pivoting movement, and wherein the resting position comprises the position parallel to the Y axis;

a fourth connection element, pivotally linked to the pivoting linking means of the third connection element, said fourth connection element able to pivot up to 90° upwards until reach an horizontal position parallel to the Z axis and downwards until reach a vertical position parallel to the Y axis, taking as reference the third connection element resting position, having pivoting linking means allowing an upward and downward pivoting movement, and wherein the resting position comprises the position parallel to the Y axis;

a fifth connection element, pivotally linked to the pivoting linking means of the fourth connection element, said fifth connection element able to pivot up to 90° upwards until reach an horizontal position parallel to the Z axis and downwards until reach a vertical position parallel to the Y axis, taking as reference the fourth connection element resting position, having rotating linking means allowing concentric rotation over a single axis, and wherein the resting position comprises the position parallel to the Y axis;

a sixth connection element, rotary linked to the rotating linking means of the fifth connection element, said sixth connection element able to rotate 360° over its own axis, having pivoting linking means allowing an upward and downward pivoting movement, and wherein the resting position for this element comprises the position parallel to the Y axis;

a griping tool, pivotally linked to the pivoting linking means of the sixth connection element, said griping tool able to pivot up to 90° upwards until reach an horizontal position parallel to the Z axis and downwards until reach a vertical position parallel to the Y axis, taking as reference the sixth connection element resting position, and wherein the resting position for the gripping tool comprises the position parallel to the Y axis; and

wherein the robotic surgical device including driving means for each connection element and to open and close the griping tool.

9. A robotic surgical device as claimed in claim **8**, wherein the means for driving each of the six connection elements comprise a stepper motor.

10. A robotic surgical device as claimed in claim **8**, wherein the means for driving each of the six connection elements comprise a stepper motor, each connected by means of a cable to a respective connection element, and each of said cables following a path trough the connection elements guided by a system of pulleys and sluing drums.

11. A robotic surgical device as claimed in claim **8**, wherein the support means comprising an elongated hollow cylinder having a first and a second end and having a diameter size adequate for entering trough a standard sized laparoscopic surgical opening.

12. A robotic surgical device as claimed in claim **8**, wherein the driving means comprising a first and a second group of seven stepper motors, each group attached to a base and driving a correspondent robotic arm, wherein the motors of each group are aligned in two parallel rows and wherein each motor drives a rotary pulley located at a superior portion thereof.

13. A robotic surgical device as claimed in claim **8**, wherein the driving means comprising a first and a second group of seven stepper motors, each group attached to a base and driving a correspondent robotic arm, wherein the motors of each group are aligned in two parallel rows, wherein each motor drives a rotary pulley located at a superior portion thereof and wherein each connection element is connected to a correspondent stepper motor by means of a cable attached to the pulley of a respective motor for a total of fourteen cables divided in two groups of seven cables, each group corresponding to a robotic arm wherein each of the cables attached to its respective pulley, passes by a correspondent series of circular groves, each located at subsequent pulleys, thus lineally guiding each cable along subsequent pulleys, thus avoiding the entanglement of the cables, and wherein each cable is pulled when the pulley of a respective stepper motor rotates in one direction and is loosen when the pulley rotates in an opposed direction, and wherein both groups of cables are aligned and conducted trough the support means.

14. A robotic surgical device comprising:

support means comprising an elongated hollow cylinder having a first and a second end and having a diameter size adequate for entering trough a standard sized laparoscopic surgical opening;

a first and a second robotic arm each positioned in a parallel relationship from each other;

driving means for driving both robotic arms, comprising: a first and a second group of seven stepper motors, each group attached to a base and driving a correspondent robotic arm, wherein the motors of each group are aligned in two parallel rows and wherein each motor drives a rotary pulley located at a superior portion thereof;

movement transmission means for each stepper motor, each comprising a cable attached to the pulley of a respective motor for a total of fourteen cables divided in two groups of seven cables, each group corresponding to a robotic arm, wherein each of the cables attached to its respective pulley, passes by a correspondent series of circular groves, each located at subse-

quent pulleys, thus lineally guiding each cable along subsequent pulleys so that a first pulley has one circular grove, the second pulley has two circular groves, one for its own cable and one for the passing cable of the previous pulley and so on, thus avoiding the entanglement of the cables, and wherein each cable is pulled when the pulley rotates in one direction and is loosen when the pulley rotates in an opposed direction, and wherein both groups of cables are aligned and conducted trough the elongated cylinder entering a first end and exiting trough the second end thereof;

wherein each robotic arm comprising:

a first connection element fixedly attached to the support means having a first open end and a second open end, and pivoting linking means, wherein the resting position for this element comprises a position parallel to the X axis;

a second connection element having a first open end and a second open end, pivotally linked to the pivoting linking means of the first connection element, said second connection element able to pivot up to 90° to the front until reaching a position parallel to the Z axis and to a side until reaching a position parallel to the X axis, taking as reference the first connection element resting position, having pivoting linking means allowing an forward and backward pivoting movement and wherein the resting position comprises the position parallel to the X axis;

a third connection element having a first open end and a second open end, pivotally linked to the pivoting linking means of the second connection element, said third connection element able to pivot up to 90° upwards until reach an horizontal position parallel to the X axis and downwards until reach a vertical position parallel to the Y axis, taking as reference the second connection element resting position, having pivoting linking means allowing an upward and downward pivoting movement, and wherein the resting position comprises the position parallel to the Y axis;

a fourth connection element having a first open end and a second open end, pivotally linked to the pivoting linking means of the third connection element, said fourth connection element able to pivot up to 90° upwards until reach an horizontal position parallel to the Z axis and downwards until reach a vertical position parallel to the Y axis, taking as reference the third connection element resting position, having pivoting linking means allowing an upward and downward pivoting movement, and wherein the resting position comprises the position parallel to the Y axis;

a fifth connection element having a first open end a second end having rotary linking means allowing concentric rotation over a single axis, pivotally linked to the pivoting linking means of the fourth connection element, said fifth connection element able to pivot up to 90° upwards until reach an horizontal position parallel to the Z axis and downwards until reach a vertical position parallel to the Y axis, taking as reference the fourth connection element resting position, and wherein the resting position comprises the position parallel to the Y axis;

a sixth connection element having a first open end rotary linked to the rotating linking means of the fifth connection element and a second open end having pivoting linking means allowing an upward and downward pivoting movement, said sixth connection element able to rotate 360° over its own axis, and wherein the resting position for this element comprises the position parallel to the Y axis;

a griping tool, pivotally linked to the pivoting linking means of the sixth connection element, said griping tool able to pivot up to 90° upwards until reach an horizontal position parallel to the Z axis and downwards until reach a vertical position parallel to the Y axis, taking as reference the sixth connection element resting position, and wherein the resting position for the gripping tool comprises the position parallel to the Y axis; and

wherein the robotic surgical device including driving means comprising a first and a second group of seven stepper motors, each group attached to a base and driving a correspondent robotic arm, wherein the motors of each group are aligned in two parallel rows and wherein each motor drives a rotary pulley located at a superior portion thereof;

wherein each connection element is connected to a correspondent stepper motor by means of a cable attached to the pulley of a respective motor for a total of fourteen cables divided in two groups of seven cables, each group corresponding to a robotic arm wherein each of the cables attached to its respective pulley, passes by a correspondent series of circular groves, each located at subsequent pulleys, thus lineally guiding each cable along subsequent pulleys, thus avoiding the entanglement of the cables, and wherein each cable is pulled when the pulley of a respective stepper motor rotates in one direction and is loosen when the pulley rotates in an opposed direction, and wherein both groups of cables are aligned and conducted trough the support means;

wherein a first corresponding group of seven cables enter the first connection element trough the first open end and wherein a first, second, third, fourth, fifth, sixth, and seventh cable of said first corresponding group, exit the first connection element trough the second open end;

wherein a first, second, third, fourth, fifth, sixth, and seventh cable exiting the first connection element, enters the second connection element trough the first open end and wherein a first, second, third, fifth, sixth, and seventh cable exit the second connection element trough the second open end;

wherein a first, second, third, fifth, sixth, and seventh cable exiting the second connection element enters the third connection element trough its first open end and wherein the first, second, third, fifth and sixth cable exit the third connection element trough the second open end;

wherein a first, second, third, fifth and sixth cable exiting the third connection element enters the fourth connection element trough its first open end and wherein a second, third, fifth and sixth cable exit the fourth connection element trough the second open end;

wherein a second, third, fifth and sixth cable exiting the fourth connection element enters the fifth connection

element trough its first open end and wherein a third, fifth and sixth cable exit the fourth connection element trough its second open end;

wherein a third, fifth and sixth cable exit the fifth connection element trough its second end enters the sixth connection element trough its first open end and wherein a third and fifth cable exit the sixth connection element trough its second open end; and

wherein a third and fifth cable exiting the sixth connection element trough its second open end enters the griping tool trough its second open end.

15. A robotic surgical device as claimed in claim **14**, wherein the first connection element comprising:

a first connection element comprising a hollow quadrangular member having a first and a second longitudinal wall, a central longitudinal axis, a first end and a second open rounded end, including a first and a second pin holes located at each longitudinal wall near the first end of the first connection element, a rectangular aperture at a lateral side near the first end, said first connection element been fixedly attached to the second end of the hollow elongated cylinder in such way that its longitudinal axis is located perpendicularly to the hollow cylindrical tube and the lateral rectangular aperture coincide with the second end of the hollow cylindrical tube and having:

a rotating sluing drum including a pin at each end, each pin rotary received inside the pin holes so that the ends of the first rotary sluing drum are rotary linked to both longitudinal walls and located between them inside the first connection element near its first end and aligned with its central longitudinal axis, having seven concentric circular grooves;

a first and a second opposed pin holes each located at a correspondent longitudinal wall near the second end of the first connection element, each aligned with the central longitudinal axis; and

wherein the first corresponding group of cables enter the first connection element trough the rectangular aperture, each passing by the sluing drum and guided by a respective concentric circular groove and exiting the first connection element trough the second open end.

16. A robotic surgical device as claimed in claim **14**, wherein the second connection element including:

a first open end and a second open end, and a central portion including a first and a second passage, wherein the first end including a superior rounded longitudinal wall having a central superior circular recess, a central rounded longitudinal wall, and an inferior rounded longitudinal wall, each depending from the central portion and each including a central coincident pin hole, wherein the pin hole of the superior rounded longitudinal wall is located at a central portion of the circular recess and wherein the second open end includes a first rounded lateral wall and a second opposed rounded lateral wall each extending from the central portion and each respectively having a first and a second pin hole at a central portion thereof, said second connection element further having:

six pulleys having a central perforation, each one located below the other forming a vertical row, and wherein a first, second and third pulley are located and rotary retained between the superior rounded longitudinal wall and the central rounded longitudinal wall, and a fourth, fifth and sixth pulley are located and rotary retained between the central rounded longitudinal wall and the inferior rounded longitudinal wall;

a pin passing trough the pin hole of the superior rounded longitudinal wall, trough the central perforation of the first, second and third pulley, trough the pin hole of the central rounded longitudinal wall, through the central perforation of the fourth, fifth and sixth pulley and trough the pinhole of the inferior rounded longitudinal wall, thus rotary retaining the six pulleys and wherein the pin protrudes over the pinhole of the superior rounded longitudinal wall and below the inferior rounded longitudinal wall;

a circular spring tightly received inside the circular recess located at the superior rounded longitudinal wall;

wherein a first, second and third cable exiting the first connection element each enters the second connection element trough the first open end and passes by and surrounds a correspondent first, second and third pulley and are guided through the first passage of its central portion to the second open end trough which they exit the second connection element and wherein a fifth, sixth, and seventh cable exiting the first connection element, enters the second connection element trough the first open end and passes by and surrounds a correspondent fourth, fifth and sixth pulley and are guided through the second passage of its central portion to the second open end trough which they exit the second connection element;

wherein a fourth cable is linked to the central portion of the second connection element, thus connecting the second connection element directly to a fourth stepper motor, thus driving the second connection element;

wherein the second connection element is pivotally retained inside the second open rounded end of the first connection element in such way that the whole first end of the second connection element including the superior, central and inferior rounded longitudinal walls and pulleys are retained inside the second open rounded end of the first connection element so that said second connection element is able to pivot up to 90° to the front until reaching a position parallel to the Z axis and to a side until reaching a position parallel to the X axis, taking as reference the first connection element resting position, when a fourth stepper motor pulls the fourth cable linked to the second connection element and wherein the resting position for this element comprises the position parallel to the X axis;

wherein the circular spring remains tightly retained between the first connection element and the circular recess of the superior rounded longitudinal wall of the second connecting element thus applying a torsional force over said two elements, forcing the second connecting element to return to its resting position; and

further including a first and a second lateral pulley each respectively linked at a superior and inferior portion of the first and second rounded lateral wall between them and inside the second open end of the second connection element, and wherein the seventh cable passing trough the second passage passes by said first and second lateral pulley before emerging from the second connection element by the second open end.

17. A robotic surgical device as claimed in claim **14**, wherein the third connection element including:

a first open end and a second open end, and a central portion including a first and a second passage wherein the first end including a first rounded longitudinal wall having a central superior circular recess, a central rounded longitudinal wall, and an third rounded longitudinal wall, each depending from the central portion and each including a central coincident pin hole, wherein the pin hole of the first rounded longitudinal wall is located at a central portion of the circular recess and wherein the second open end includes a first rounded lateral wall and a second rounded lateral wall each extending from the central portion and including a correspondent first and a second pin holes, and having:

five pulleys having a central perforation, each one located below the other forming a linear row, and wherein a first and second pulley are located and rotary retained between the first rounded longitudinal wall and the central rounded longitudinal wall, and a third, fourth and fifth pulley are located and rotary retained between the central rounded longitudinal wall and the third rounded longitudinal wall;

a pin passing trough the pin hole of the first rounded longitudinal wall, trough the central perforation of the first and second pulley, trough the pin hole of the central rounded longitudinal wall, through the central perforation of the third, fourth and fifth pulley and trough the pinhole of the third rounded longitudinal wall in that order, thus rotary retaining the five pulleys and wherein the pin protrudes over the pinhole of the first rounded longitudinal wall and below the third rounded longitudinal wall;

a circular spring tightly received inside the circular recess located at the first rounded longitudinal wall;

wherein a fifth, and a sixth cable exiting the second connection element each enters the third connection element trough the first open end and passes by and surrounds a correspondent second, and first pulley and are guided through the first passage of its central portion to the second open end trough which they exit the third connection element and wherein a first, second and third cable exiting the second connection element, enters the third connection element trough the first open end and passes by and surrounds a correspondent fifth, fourth and third pulley and are guided through the second passage of its central portion to the second open end trough which they exit the third connection element;

wherein a seventh cable is linked to the central portion of the third connection element, thus connecting the third connection element directly to a seventh stepper motor, thus driving the third connection element;

wherein the third connection element is pivotally retained inside the second open end of the second connection element in such way that the whole first end of the third connection element including the first, central and third rounded longitudinal walls and pulleys are retained inside the second open end of the second connection element in such way that said third connection element is able to move up to 90^0 upwards until reach an horizontal position parallel to the X axis and downwards until reach a vertical position parallel to the Y axis, taking as reference the second connection element resting position, when a seventh stepper motor pulls the seventh cable linked to the third connection element and wherein the resting position comprises the position parallel to the Y axis; and

wherein the circular spring remains tightly retained between the second connection element and the circular recess of the first rounded longitudinal wall of the third connecting element thus applying a torsional force over said two elements, forcing the third connecting element to return to its resting position.

18. A robotic surgical device as claimed in claim **14**, wherein the fourth connection element including:

a first open end and a second open end, and an elongated central portion including a first and a second passage and a central path having a longitudinal axis defined by a first and a second lateral wall and by an inferior longitudinal wall, wherein the first end including a first rounded lateral wall having a central superior circular recess, a central rounded lateral wall, and an third rounded lateral wall, each depending from the central portion and each including a central coincident pin hole, wherein the pin hole of the superior rounded longitudinal wall is located at a central portion of the circular recess and wherein the second open end includes a first rounded lateral wall and a second rounded lateral wall extending from the central portion each having a central pin hole, and having:

four pulleys having a central perforation, each one located below the other forming a linear row, and wherein a first and a second pulley are located and rotary retained between the first end first rounded lateral wall and the first end central rounded longitudinal wall, and a third and fourth pulley are located and rotary retained between the first end central rounded longitudinal wall and the first end third rounded longitudinal wall;

a pin passing trough the pin hole of the first end first rounded longitudinal wall, trough the central perforation of the first and second pulley, trough the pin hole of the first end central rounded longitudinal wall, through the central perforation of the third and fourth pulley and trough the pinhole of the first end third rounded longitudinal wall in that order, thus rotary retaining the four pulleys and wherein the pin protrudes over the first end first rounded longitudinal wall and below the first end third rounded longitudinal wall;

a circular spring tightly received inside the circular recess located at the first end first rounded longitudinal wall;

wherein a sixth and fifth cable exiting the third connection element each enters the fourth connection element trough the first open end and passes by and surrounds a correspondent first and second pulley and are guided through the first passage of the central portion across the central path to the second open end trough which they exit the fourth connection element and wherein a second and third cable exiting the third connection element, enters the fourth connection element trough the first open end and passes by and surrounds a correspondent fourth and third pulley and are guided through the first passage of the central portion across the central path to the second open end trough which they exit the fourth connection element;

wherein a first cable is linked to the first end third rounded lateral wall of the fourth connection element, thus connecting the fourth connection element directly to the first stepper motor, thus driving the fourth connection element;

wherein the fourth connection element is pivotally retained inside the second open end of the third connection element in such way that the whole first end of the fourth connection element including the first, central and third rounded longitudinal walls and pulleys are retained inside the second open end of the third connection element in such way that said fourth connection element is able to move up to 90^0 upwards until reach an horizontal position parallel to the Z axis and downwards until reach a vertical position parallel to the Y axis, taking as reference the third connection element resting position, when a first stepper motor pulls the first cable linked to the fourth connection element and wherein the resting position for the fourth connection element comprises the position parallel to the Y axis;

wherein the circular spring remains tightly retained between the third connection element and the circular recess of the first end first rounded lateral wall of the fourth connecting element thus applying a torsional force over said two elements, forcing the fourth connecting element to return to its resting position; and

further including:

a first sluing drum having a first and a second end, and a longitudinal axis, wherein said first sluing drum is rotary and transversally retained inside the central path in such way that both ends are rotary retained between the lateral walls of the central path with its longitudinal axis being located perpendicularly to the central path longitudinal axis and having one circular grove;

a second sluing drum having a first and a second end, and a longitudinal axis, wherein said second sluing drum is rotary and transversally retained inside the central path in such way that both ends are rotary retained between the lateral walls of the central path with its longitudinal axis being located perpendicularly to the central path longitudinal axis and having a three circular groves;

a first pulley, having a central elongated member axis including a first end and a second end which is joined to the center of the pulley, wherein the first end of the axis member is rotary retained to the inferior longitudinal wall of the central path in such way that it is positioned in a perpendicularly relationship with respect to the central path longitudinal axis;

a second pulley, having a central elongated member axis including a first end and a second end which is joined to the center of the pulley, wherein the first end of the axis member is rotary retained to the second longitudinal wall of the central path in such way that it is positioned in a perpendicularly relationship with respect to the central path longitudinal axis;

a third pulley, having a central elongated member axis including a first end and a second end which is joined to the center of the pulley, wherein the first end of the axis member is retained to both lateral walls of the central path in such way that it is positioned between them;

wherein the first sluing drum, second sluing drum and third pulley are located along the central path in said order in a zig-zag pattern and retained to both central path lateral walls as described above;

wherein the first and second pulley are located along the central path in said order in a zig-zag pattern and retained to the second central path inferior longitudinal wall as described above;

wherein the second cable passing trough the central path, passes by and surrounds the circular grove of the first sluing drum and passes by and surrounds the third pulley;

wherein the third cable passes by and surrounds a third circular groove of the second sluing drum, and passes by the second and third pulleys; and

wherein the fifth and sixth cable passes by and surrounds a correspondent circular grove of the second sluing drum.

19. A robotic surgical device as claimed in claim **14**, wherein the fifth connection element including:

a first open end and a second end having a cylindrical shape, a circular cross section and a circular internal and external wall, an entrance opening, an exit opening, and a longitudinal and transversal axis, wherein the first end including a first rounded lateral wall, and a second rounded longitudinal wall having a central circular recess, each depending from the second end circular wall and each including a central coincident pin hole, wherein the pin hole of the second rounded lateral wall is located at a central portion of the circular recess and wherein the second end includes cylindrical connection member including an open transversal lateral housing opened to the exterior of the rotary connection means and a cylindrical linking member having two circular passages, and having:

a circular spring tightly received inside the circular recess located at the second rounded lateral wall;

a first sluing drum having a first and a second end, each including an elongated longitudinal axis, wherein the ends of the longitudinal axis member passes trough the pin hole of the first and second rounded lateral wall respectively, thus rotary and transversally retained between the first and second rounded longitudinal wall in a central portion thereof and including three circular groves, and wherein each end of the elongated member axis protrudes over the pinhole of the first rounded lateral wall and over the pinhole of the second rounded lateral wall;

a second sluing drum having a first and a second end, and a longitudinal axis, wherein said second sluing drum is rotary and transversally retained between the first and second rounded lateral wall and including one circular grove, wherein the second sluing drum is located next to the first sluing drum in a parallel relationship and off center with respect to the longitudinal axis;

a third and a fourth sluing drums, each having a first and a second end and a circular grove, and each parallely located with respect to each other and aligned with respect to the transversal axis;

a first and a second pulley, each having a central elongated member axis including a first end and a second end which is joined to the center of the pulley, wherein the first end of the axis member of the first pulley is attached to the interior circular wall of the cylindrical connection member and the first end of the axis member of the second pulley is attached to the interior circular wall of the cylindrical linking member in such way that each axis is positioned in a perpendicularly relationship with respect to the longitudinal axis, and in a parallel relationship with respect to the transversal axis, wherein the

first pulley including only one circular grove and the second pulley including a first and a second circular grove and wherein the first pulley is located next to the third and fourth parallel sluing drums and wherein the second pulley is located next to the first pulley;

a third pulley having a central elongated member axis including a first end and a second end which is joined to the center of the pulley, said third pulley rotary retained inside the open transversal lateral housing wherein the first end of the axis member is retained to a wall of the open transversal lateral housing in such way that it is positioned in a parallel relationship with respect to the longitudinal axis, and in a perpendicular relationship with respect to the transversal axis;

wherein a third cable exiting the fourth connection element enters the fifth connection element trough the first open end and passes by and surrounds a correspondent grove of the first sluing drum and third sluing drum and is guided trough the cylindrical connection member and cylindrical linking member and exits the fifth connection element trough the first circular passage;

wherein a fifth cable exiting the fourth connection element enters the fifth connection element trough the first open end and passes by and surrounds the respective grove of the first sluing drum and second sluing drum and is guided trough the cylindrical connection member inside of which it passes by the first pulley and the first grove of the second pulley and trough the cylindrical linking member and exits the fifth connection element through the second circular passage;

wherein the sixth cable exiting the fourth connection element enters the fifth connection element trough the first open end and passes by and surrounds a respective grove of the first and fourth sluing drum and is guided through the cylindrical connection member inside of which it passes by the first pulley, trough the cylindrical linking member inside of which it passes by the second grove of the second pulley, makes a turn of 90^0, passes by the third pulley and exits the fifth element trough the open transversal lateral housing;

wherein the second cable exiting the fourth connection element is linked to the first open end second rounded lateral wall;

wherein the fifth connection element is pivotally retained inside the second open end of the fourth connection element in such way that the whole first end of the fifth connection element is retained inside the second open end of the fourth connection element so that said fourth connection element is able to move up to 90° upwards until reach an horizontal position parallel to the Z axis and downwards until reach a vertical position parallel to the Y axis, taking as reference the fourth connection element resting position, when a second stepper motor pulls the second cable linked to the first open end second rounded lateral wall and wherein the resting position for the fifth connection element comprises the position parallel to the Y axis; and

wherein the circular spring remains tightly retained between the fourth connection element and the circular recess of the fifth connection element second rounded lateral wall thus applying a torsional force over said two elements, forcing the fifth connecting element to return to its resting position.

20. A robotic surgical device as claimed in claim **14**, wherein the sixth connection element including:

a longitudinal and transversal axis, a first open end having a cylindrical shape and a circular cross section including a hollow rotary connection section having a circular internal wall, rotary linked to the rotary linking means of the fifth connection element thus rotary linking the fifth and sixth connection element, and a second open end having a first rounded lateral wall, a second rounded lateral wall each including a central coincident pin hole and an inferior longitudinal wall each depending from the first open end, and having:

a first pulley having a central elongated member axis including a first end and a second end which is rotary joined to the center of the pulley, wherein the first end of the axis member is retained to the inferior longitudinal wall in such way that its central elongated member axis is located perpendicularly to the longitudinal wall and between both lateral walls;

a second pulley having a central elongated member axis including a first end and a second end which is rotary joined to the center of the pulley, wherein the first end of the axis member is retained to the inferior longitudinal wall, next to the first pulley, in such way that its central elongated member axis is located perpendicularly to the longitudinal wall and between both lateral walls;

a sluing drum having a first and a second end, and a longitudinal axis, wherein said sluing drum is rotary and transversally retained between the lateral walls, with its longitudinal axis being located perpendicularly to the sixth connection element longitudinal axis and over both pulleys and having one circular grove;

wherein the sixth cable which exits the fifth connection element is linked to the circular internal wall of the sixth connection element rotary connection section, thus connecting the sixth connection element directly to a sixth stepper motor, so that when the stepper motor pulls the sixth cable, it laterally pulls the sixth connection element thus rotating it over the rotary connection which connects it to the fifth connection element;

wherein the fifth cable exiting the fifth connection element enters the sixth connection element trough the first open end, passes by and surrounds the first pulley, passes by the second pulley thereafter and exits the sixth connection element by the second open end;

wherein the third cable exiting the fifth connection element enters the sixth connection element trough the first open end passes by the sluing drum and exits the sixth connection element by the second open end; and

wherein the sixth connection element is able to rotate over its own axis over the rotary connection, and is able to move up to 90° upwards until reach an horizontal position parallel to the Z axis and downwards until reach a vertical position parallel to the Y axis together with the fifth connection element.

21. A robotic surgical device as claimed in claim **14**, wherein the griping tool comprising:

a hollow main body having a rectangular shape, including a first end having a semi-cylindrical wall having a circular passage grove, an elongated cable receiving section including a passage to the interior of the hollow main body located next to the circular passage grove, a first and a second longitudinal wall, a first and a second lateral walls, a hollow interior a second open end, and a

cable attaching element located inside the hollow interior of the hollow main body at a central portion thereof, wherein the first end of the hollow main body, having a central superior circular recess at the first lateral wall, wherein the first end of the hollow main body having a coincident pin hole at each lateral wall, wherein the pin hole of the first lateral wall is located at a central portion of the circular recess, and wherein the first and second longitudinal walls each including a coincident perforation at a central portion thereof, and further having;

a circular spring tightly received inside the circular recess located at the first rounded lateral wall;

a fixed plier joined and depending from the second lateral wall, first longitudinal wall and second longitudinal wall;

a pulley, having a central elongated member axis including a first end and a second end which is joined to the center of the pulley, each one rotary retained inside the griping tool hollow main body wherein the first and second end passes trough a respective perforation, of a respective lateral wall and each one protruding over its respective lateral wall, thus rotary joining the pulley to the first and second lateral walls, so that its elongated member axis is located parallel to both longitudinal walls and perpendicularly to the lateral walls and wherein it is positioned in such way that the pulley is concentric with the first end semi-cylindrical wall cross section and coinciding with the circular passage grove;

a pivotal second plier, having a first and a second end, wherein the first end has a drum including a first and a second end having a respective pin, a circular grove near the second end and a longitudinal axis, wherein the drum is pivotally joined inside the hollow main body at a central portion thereof so that the pins of both ends are pivotally retained inside a respective pin hole of a respective longitudinal wall, and thus pivotally linking the pivotal plier and forming a complete and symmetrical pair of pliers with the fixed plier;

wherein the griping tool hollow main body first end is pivotally retained inside the second open end of the sixth connection element in such way that the whole first end of the griping tool hollow main body is retained inside the second open end of the sixth connection element so that said griping tool hollow main body is able to move up to 90° upwards until reach an horizontal position parallel to the Z axis and downwards until reach a vertical position parallel to the Y axis, taking as reference the fifth connection element resting position, and wherein the resting position for the griping tool comprises the position parallel to the Y axis;

wherein the circular spring remains tightly retained between the sixth connection element and the circular recess of the first lateral wall of the griping tool hollow main body thus applying a torsional force over said two elements, forcing the griping tool hollow main body to return to its resting position

wherein the third cable exiting the sixth connection element is received inside the elongated cable receiving section and enters the griping tool hollow main body in order to be linked to the cable attaching element, thus connecting the griping element hollow main body directly to a third stepper motor, so that when the third stepper motor pulls the third cable, it pulls the griping tool causing it to move up to 90^0 upwards until reach an horizontal position parallel to the Z axis;

wherein it is further included a circular spring tightly retained around the drum near its first end and between both griping tool hollow main body lateral walls, thus forcing the pliers to open, which comprise its resting position;

wherein the fifth cable exiting the sixth connection element enters the griping tool hollow main body by the circular passage grove, passes by the pulley and is wound around the drum of the pivotal, thus directly connecting a fifth stepper motor to the pivotal plier, so that when the fifth stepper motor pulls the fifth cable it causes the drum of the pivotal plier to rotate, thus pivoting the pivotal plier and opening the pliers, wherein the resting position for the pliers is at a closed position.

22. A robotic surgical device comprising:

support means comprising an elongated hollow cylinder having a first and a second end and having a diameter size adequate for entering trough a standard sized laparoscopic surgical opening;

a first and a second robotic arm each positioned in a parallel relationship from each other;

driving means for driving both robotic arms, comprising: a first and a second group of seven stepper motors, each group attached to a base and driving a correspondent robotic arm, wherein the motors of each group are aligned in two parallel rows and wherein each motor drives a rotary pulley located at a superior portion thereof;

movement transmission means for each stepper motor, each comprising a cable attached to the pulley of a respective motor for a total of fourteen cables divided in two groups of seven cables, each group corresponding to a robotic arm wherein each of the cables attached to its respective pulley, passes by a correspondent series of circular groves, each located at subsequent pulleys, thus lineally guiding each cable along subsequent pulleys so that a first pulley has one circular grove, the second pulley has two circular groves, one for its own cable and one for the passing cable of the previous pulley and so on, thus avoiding the entanglement of the cables as shown in FIG. **3**, and wherein each cable is pulled when the pulley rotates in one direction and is loosen when the pulley rotates in an opposed direction, and wherein both groups of cables are aligned and conducted trough the elongated cylinder entering a first end and exiting trough the second end thereof;

wherein each robotic arm comprising:

a first connection element comprising a hollow quadrangular member having a first and a second longitudinal wall, a central longitudinal axis, a first end and a second open rounded end, including a first and a second pin holes located at each longitudinal wall near the first end of the first connection element, a rectangular aperture at a lateral side near the first end, said first connection element been fixedly attached to the second end of the hollow elongated cylinder in such way that its longitudinal axis is located perpendicularly to the hollow cylindrical tube and the lateral rectangular aperture coincide with the second end of the hollow cylindrical tube and having:

a rotating sluing drum including a pin at each end, each pin rotary received inside the pin holes so that the ends

of the first rotary sluing drum are rotary linked to both longitudinal walls and located between them inside the first connection element near its first end and aligned with its central longitudinal axis, having seven concentric circular grooves;

a first and a second opposed pin holes each located at a correspondent longitudinal wall near the second end of the first connection element, each aligned with the central longitudinal axis;

wherein the first corresponding group of cables enter the first connection element trough the rectangular aperture, each passing by the sluing drum and guided by a respective concentric circular groove and exiting the first connection element trough the second open end; and

wherein the resting position for this element comprises a position parallel to the X axis;

a second connection element including a first open end and a second open end, and a central portion including a first and a second passage, wherein the first end including a superior rounded longitudinal wall having a central superior circular recess, a central rounded longitudinal wall, and an inferior rounded longitudinal wall, each depending from the central portion and each including a central coincident pin hole, wherein the pin hole of the superior rounded longitudinal wall is located at a central portion of the circular recess and wherein the second open end includes a first rounded lateral wall and a second opposed rounded lateral wall each extending from the central portion and each respectively having a first and a second pin hole at a central portion thereof, said second connection element further having:

six pulleys having a central perforation, each one located below the other forming a vertical row, and wherein a first, second and third pulley are located and rotary retained between the superior rounded longitudinal wall and the central rounded longitudinal wall, and a fourth, fifth and sixth pulley are located and rotary retained between the central rounded longitudinal wall and the inferior rounded longitudinal wall;

a pin passing trough the pin hole of the superior rounded longitudinal wall, trough the central perforation of the first, second and third pulley, trough the pin hole of the central rounded longitudinal wall, through the central perforation of the fourth, fifth and sixth pulley and trough the pinhole of the inferior rounded longitudinal wall, thus rotary retaining the six pulleys and wherein the pin protrudes over the pinhole of the superior rounded longitudinal wall and below the inferior rounded longitudinal wall;

a circular spring tightly received inside the circular recess located at the superior rounded longitudinal wall;

wherein a first, second and third cable exiting the first connection element each enters the second connection element trough the first open end and passes by and surrounds a correspondent first, second and third pulley and are guided through the first passage of its central portion to the second open end trough which they exit the second connection element and wherein a fifth, sixth, and seventh cable exiting the first connection element, enters the second connection element trough the first open end and passes by and surrounds a correspondent fourth, fifth and sixth pulley and are guided through the second passage of its central portion to the second open end trough which they exit the second connection element;

wherein a fourth cable is linked to the central portion of the second connection element, thus connecting the second connection element directly to a fourth stepper motor, thus driving the second connection element;

wherein the second connection element is pivotally retained inside the second open rounded end of the first connection element by locking the portions of the pin protruding over the superior rounded longitudinal wall and below the inferior rounded longitudinal wall inside the first and second pin holes located at a correspondent longitudinal wall of the first connection element in such way that the whole first end of the second connection element including the superior, central and inferior rounded longitudinal walls and pulleys are retained between the first and second longitudinal walls in such way that said second connection element is able to pivot up to 90° to the front until reaching a position parallel to the Z axis and to a side until reaching a position parallel to the X axis, taking as reference the first connection element resting position, when the fourth stepper motor pulls the fourth cable linked to the second connection element and wherein the resting position for this element comprises the position parallel to the X axis;

wherein the circular spring remains tightly retained between the first longitudinal wall inferior portion of the first connection element and the circular recess of the superior rounded longitudinal wall of the second connecting element thus applying a torsional force over said two elements, forcing the second connecting element to return to its resting position; and

further including a first and a second lateral pulley each respectively linked at a superior and inferior portion of the first and second rounded lateral wall between them and inside the second open end of the second connection element, and wherein the seventh cable passing trough the second passage passes by said first and second lateral pulley before emerging from the second connection element by the second open end;

a third connection element including a first open end and a second open end, and a central portion including a first and a second passage wherein the first end including a first rounded longitudinal wall having a central superior circular recess, a central rounded longitudinal wall, and an third rounded longitudinal wall, each depending from the central portion and each including a central coincident pin hole, wherein the pin hole of the first rounded longitudinal wall is located at a central portion of the circular recess and wherein the second open end includes a first rounded lateral wall and a second rounded lateral wall each extending from the central portion and including a correspondent first and a second pin holes, and having:

five pulleys having a central perforation, each one located below the other forming a linear row, and wherein a first and second pulley are located and rotary retained between the first rounded longitudinal wall and the central rounded longitudinal wall, and a third, fourth and fifth pulley are located and rotary retained between the central rounded longitudinal wall and the third rounded longitudinal wall;

a pin passing trough the pin hole of the first rounded longitudinal wall, trough the central perforation of the first and second pulley, trough the pin hole of the central rounded longitudinal wall, through the central perforation of the third, fourth and fifth pulley and trough the pinhole of the third rounded longitudinal wall in that order, thus rotary retaining the five pulleys and wherein the pin protrudes over the pinhole of the first rounded longitudinal wall and below the third rounded longitudinal wall;

a circular spring tightly received inside the circular recess located at the first rounded longitudinal wall;

wherein a fifth, and a sixth cable exiting the second connection element each enters the third connection element trough the first open end and passes by and surrounds a correspondent second, and first pulley and are guided through the first passage of its central portion to the second open end trough which they exit the third connection element and wherein a first, second and third cable exiting the second connection element, enters the third connection element trough the first open end and passes by and surrounds a correspondent fifth, fourth and third pulley and are guided through the second passage of its central portion to the second open end trough which they exit the third connection element;

wherein a seventh cable is linked to the central portion of the third connection element, thus connecting the third connection element directly to a seventh stepper motor, thus driving the third connection element;

wherein the third connection element is pivotally retained inside the second open end of the second connection element by locking the portions of the pin protruding over the first rounded longitudinal wall and below the third rounded longitudinal wall inside the first and second pin hole located at a correspondent second open end rounded lateral wall of the second connection element in such way that the whole first end of the third connection element including the first, central and third rounded longitudinal walls and pulleys are retained between the first and second rounded longitudinal walls in such way that said third connection element is able to move up to 90^0 upwards until reach an horizontal position parallel to the X axis and downwards until reach a vertical position parallel to the Y axis, taking as reference the second connection element resting position, when the seventh stepper motor pulls the seventh cable linked to the third connection element and wherein the resting position comprises the position parallel to the Y axis; and

wherein the circular spring remains tightly retained between an internal face of the second rounded lateral wall of the second connection element and the circular recess of the first rounded longitudinal wall of the third connecting element thus applying a torsional force over said two elements, forcing the third connecting element to return to its resting position;

a fourth connection element including a first open end and a second open end, and an elongated central portion including a first and a second passage and a central path having a longitudinal axis defined by a first and a second lateral wall and by an inferior longitudinal wall, wherein the first end including a first rounded lateral wall having a central superior circular recess, a central rounded lateral wall, and an third rounded lateral wall, each depending from the central portion and each including a central coincident pin hole, wherein the pin hole of the superior rounded longitudinal wall is located at a central portion of the circular recess and wherein the second open end includes a first rounded lateral wall and a second rounded lateral wall extending from the central portion each having a central pin hole, and having:

four pulleys having a central perforation, each one located below the other forming a linear row, and wherein a first and a second pulley are located and rotary retained between the first end first rounded lateral wall and the first end central rounded longitudinal wall, and a third and fourth pulley are located and rotary retained between the first end central rounded longitudinal wall and the first end third rounded longitudinal wall;

a pin passing trough the pin hole of the first end first rounded longitudinal wall, trough the central perforation of the first and second pulley, trough the pin hole of the first end central rounded longitudinal wall, through the central perforation of the third and fourth pulley and trough the pinhole of the first end third rounded longitudinal wall in that order, thus rotary retaining the four pulleys and wherein the pin protrudes over the first end first rounded longitudinal wall and below the first end third rounded longitudinal wall;

a circular spring tightly received inside the circular recess located at the first end first rounded longitudinal wall;

wherein a sixth and fifth cable exiting the third connection element each enters the fourth connection element trough the first open end and passes by and surrounds a correspondent first and second pulley and are guided through the first passage of the central portion across the central path to the second open end trough which they exit the fourth connection element and wherein a second and third cable exiting the third connection element, enters the fourth connection element trough the first open end and passes by and surrounds a correspondent fourth and third pulley and are guided through the first passage of the central portion across the central path to the second open end trough which they exit the fourth connection element;

wherein a first cable is linked to the first end third rounded lateral wall of the fourth connection element, thus connecting the fourth connection element directly to the first stepper motor, thus driving the fourth connection element;

wherein the fourth connection element is pivotally retained inside the second open end of the third connection element by locking the portions of the pin protruding over the first end first rounded lateral wall and below the first end third rounded longitudinal wall inside the first and second pin holes located at a correspondent second open end first and second rounded lateral wall of the third connection element in such way that the whole first end of the fourth connection element including the first, central and third rounded longitudinal walls and pulleys are retained between the second end first and second longitudinal walls in such way that said fourth connection element is able to move up to 90^0 upwards until reach an horizontal position parallel to the Z axis and downwards until reach a vertical position parallel to the Y axis, taking as reference the third connection element resting position, when the first stepper motor pulls the first cable linked to the fourth connection element and

wherein the resting position for the fourth connection element comprises the position parallel to the Y axis;

wherein the circular spring remains tightly retained between an internal face of the second end first rounded lateral wall of the third connection element and the circular recess of the first end first rounded lateral wall of the fourth connecting element thus applying a torsional force over said two elements, forcing the fourth connecting element to return to its resting position; and

further including:

a first sluing drum having a first and a second end, and a longitudinal axis, wherein said first sluing drum is rotary and transversally retained inside the central path in such way that both ends are rotary retained between the lateral walls of the central path with its longitudinal axis being located perpendicularly to the central path longitudinal axis and having one circular grove;

a second sluing drum having a first and a second end, and a longitudinal axis, wherein said second sluing drum is rotary and transversally retained inside the central path in such way that both ends are rotary retained between the lateral walls of the central path with its longitudinal axis being located perpendicularly to the central path longitudinal axis and having a three circular groves;

a first pulley, having a central elongated member axis including a first end and a second end which is joined to the center of the pulley, wherein the first end of the axis member is rotary retained to the inferior longitudinal wall of the central path in such way that it is positioned in a perpendicularly relationship with respect to the central path longitudinal axis;

a second pulley, having a central elongated member axis including a first end and a second end which is joined to the center of the pulley, wherein the first end of the axis member is rotary retained to the second longitudinal wall of the central path in such way that it is positioned in a perpendicularly relationship with respect to the central path longitudinal axis;

a third pulley, having a central elongated member axis including a first end and a second end which is joined to the center of the pulley, wherein the first end of the axis member is retained to both lateral walls of the central path in such way that it is positioned between them;

wherein the first sluing drum, second sluing drum and third pulley are located along the central path in said order in a zig-zag pattern and retained to both central path lateral walls as described above;

wherein the first and second pulley are located along the central path in said order in a zig-zag pattern and retained to the second central path inferior longitudinal wall as described above;

wherein the second cable passing trough the central path, passes by and surrounds the circular grove of the first sluing drum and passes by and surrounds the third pulley;

wherein the third cable passes by and surrounds a third circular groove of the second sluing drum, and passes by the second and third pulleys; and

wherein the fifth and sixth cable passes by and surrounds a correspondent circular grove of the second sluing drum;

a fifth connection element including a first open end and a second end having a cylindrical shape, a circular cross section and a circular internal and external wall, an entrance opening, an exit opening, and a longitudinal and transversal axis, wherein the first end including a first rounded lateral wall, and a second rounded longitudinal wall having a central circular recess, each depending from the second end circular wall and each including a central coincident pin hole, wherein the pin hole of the second rounded lateral wall is located at a central portion of the circular recess and wherein the second end includes cylindrical connection member including an open transversal lateral housing opened to the exterior of the rotary connection means and a cylindrical linking member having two circular passages and having:

a circular spring tightly received inside the circular recess located at the second rounded lateral wall;

a first sluing drum having a first and a second end, each including an elongated longitudinal axis member, wherein the ends of the longitudinal axis member passes trough the pin hole of the first and second rounded lateral wall respectively, thus rotary and transversally retained between the first and second rounded longitudinal wall in a central portion thereof and including three circular groves and wherein each end of the elongated member axis protrudes over the pinhole of the first rounded lateral wall and over the pinhole of the second rounded lateral wall;

a second sluing drum having a first and a second end, and a longitudinal axis, wherein said second sluing drum is rotary and transversally retained between the first and second rounded lateral wall and including one circular grove, wherein the second sluing drum is located next to the first sluing drum in a parallel relationship and off center with respect to the longitudinal axis;

a third and a fourth sluing drums, each having a first and a second end and a circular grove, and each parallely located with respect to each other and aligned with respect to the transversal axis;

a first and a second pulley, each having a central elongated member axis including a first end and a second end which is joined to the center of the pulley, wherein the first end of the axis member of the first pulley is attached to the interior circular wall of the cylindrical connection member and the first end of the axis member of the second pulley **98** is attached to the interior circular wall of the cylindrical linking member in such way that each axis is positioned in a perpendicularly relationship with respect to the longitudinal axis, and in a parallel relationship with respect to the transversal axis, wherein the first pulley including only one circular grove and the second pulley including a first and a second circular grove and wherein the first pulley is located next to the third and fourth parallel sluing drums and wherein the second pulley is located next to the first pulley;

a third pulley having a central elongated member axis including a first end and a second end which is joined to the center of the pulley, said third pulley rotary retained inside the open transversal lateral housing wherein the first end of the axis member is retained to a wall of the open transversal lateral housing in such way that it is positioned in a parallel relationship with respect to the

longitudinal axis, and in a perpendicular relationship with respect to the transversal axis;

wherein a third cable exiting the fourth connection element enters the fifth connection element trough the first open end and passes by and surrounds a correspondent grove of the first sluing drum and third sluing drum and is guided trough the cylindrical connection member and cylindrical linking member and exits the fifth connection element trough the first circular passage;

wherein a fifth cable exiting the fourth connection element enters the fifth connection element trough the first open end and passes by and surrounds the respective grove of the first sluing drum and second sluing drum and is guided trough the cylindrical connection member inside of which it passes by the first pulley and the first grove of the second pulley and trough the cylindrical linking member and exits the fifth connection element through the second circular passage;

wherein the sixth cable exiting the fourth connection element enters the fifth connection element trough the first open end and passes by and surrounds a respective grove of the first and fourth sluing drum and is guided through the cylindrical connection member inside of which it passes by the first pulley, trough the cylindrical linking member inside of which it passes by the second grove of the second pulley, makes a turn of 90^{0}, passes by the third pulley and exits the fifth element trough the open transversal lateral housing;

wherein the second cable exiting the fourth connection element is linked to the first open end second rounded lateral wall;

wherein the fifth connection element is pivotally retained inside the second open end of the fourth connection element by locking the ends of the elongated longitudinal axis member protruding over the first rounded lateral wall and over the second rounded lateral wall inside the first and second pin holes located at a correspondent second open end rounded lateral wall of the fourth connection element in such way that the whole first end of the fifth connection element is retained between the second open end first and second lateral walls so that said fourth connection element is able to move up to 90° upwards until reach an horizontal position parallel to the Z axis and downwards until reach a vertical position parallel to the Y axis, taking as reference the fourth connection element resting position, when the second stepper motor pulls the second cable linked to the first open end second rounded lateral wall and wherein the resting position for the fifth connection element comprises the position parallel to the Y axis; and

wherein the circular spring remains tightly retained between an internal face of the second end second rounded lateral wall of the fourth connection element and the circular recess of the fifth connection element second rounded lateral wall thus applying a torsional force over said two elements, forcing the fifth connecting element to return to its resting position;

a sixth connection element including a longitudinal and transversal axis, a first open end having a cylindrical shape and a circular cross section including a hollow rotary connection section having a circular internal wall, rotary receiving and linking the cylindrical linking member of the fifth connection element thus rotary linking the fifth and sixth connection element, and a second open end having a first rounded lateral wall, a second rounded lateral wall each including a central coincident pin hole and an "inferior" longitudinal wall each depending from the first open end, and having:

a first pulley having a central elongated member axis including a first end and a second end which is rotary joined to the center of the pulley, wherein the first end of the axis member is retained to the "inferior" longitudinal wall in such way that its central elongated member axis is located perpendicularly to the longitudinal wall and between both lateral walls;

a second pulley having a central elongated member axis including a first end and a second end which is rotary joined to the center of the pulley, wherein the first end of the axis member is retained to the inferior longitudinal wall, next to the first pulley, in such way that its central elongated member axis is located perpendicularly to the longitudinal wall and between both lateral walls;

a sluing drum having a first and a second end, and a longitudinal axis, wherein said sluing drum is rotary and transversally retained between the lateral walls, with its longitudinal axis being located perpendicularly to the sixth connection element longitudinal axis and over both pulleys and having one circular grove;

wherein the sixth cable which exits the fifth connection element by open transversal lateral housing of the Cylindrical connection member which is received and rotary retained inside the hollow rotary connection section of the sixth connection element, is linked to the circular internal wall of the sixth connection element rotary connection section, thus connecting the sixth connection element directly to a sixth stepper motor, so that when the stepper motor pulls the sixth cable, it laterally pulls the sixth connection element thus rotating it over the rotary connection which connects it to the fifth connection element;

wherein the fifth cable exiting the fifth connection element enters the sixth connection element trough the first open end, passes by and surrounds the first pulley, passes by the second pulley thereafter and exits the sixth connection element by the second open end;

wherein the third cable exiting the fifth connection element enters the sixth connection element trough the first open end passes by the sluing drum and exits the sixth connection element by the second open end; and

wherein the sixth connection element is able to rotate over its own axis over the rotary connection as previously described, and is able to move up to 90° upwards until reach an horizontal position parallel to the Z axis and downwards until reach a vertical position parallel to the Y axis together with the fifth connection element;

a griping tool comprising:

a hollow main body having a rectangular shape, including a first end having a semi-cylindrical wall having a circular passage grove, an elongated cable receiving section including a passage to the interior of the hollow main body located next to the circular passage grove, a first and a second longitudinal wall, a first and a second lateral walls, a hollow interior a second open end, and a cable attaching element located inside the hollow interior of the hollow main body at a central portion thereof, wherein the first end of the hollow main body, having a central superior circular recess at the first lateral wall, wherein the first end of the hollow main body having a

coincident pin hole at each lateral wall, wherein the pin hole of the first lateral wall is located at a central portion of the circular recess, and wherein the first and second longitudinal walls each including a coincident perforation at a central portion thereof, and further having;

a circular spring tightly received inside the circular recess located at the first rounded lateral wall;

a fixed plier, joined and depending from the second lateral wall, first longitudinal wall and second longitudinal wall;

a pulley, having a central elongated member axis including a first end and a second end which is joined to the center of the pulley, each one rotary retained inside the griping tool hollow main body wherein the first and second end passes trough a respective perforation of a respective lateral wall and each one protruding over its respective lateral wall, thus rotary joining the pulley to the first and second lateral walls, so that its elongated member axis is located parallel to both longitudinal walls and perpendicularly to the lateral walls and wherein it is positioned in such way that the pulley is concentric with the first end semi-cylindrical wall cross section and coinciding with the circular passage grove;

a pivotal second plier, having a first and a second end, wherein the first end has a drum including a first and a second end having a respective pin, a circular grove near the second end and a longitudinal axis, wherein the drum is pivotally joined inside the hollow main body at a central portion thereof so that the pins of both ends are pivotally retained inside a respective pin hole of a respective longitudinal wall, and thus pivotally linking the pivotal plier and forming a complete and symmetrical pair of pliers with the fixed plier;

wherein the griping tool hollow main body first end is pivotally retained inside the second open end of the sixth connection element by locking the ends of the first and second end of the pulley central elongated member axis protruding over the first and second lateral walls inside the first and second coincident pin holes located at a correspondent second open end rounded longitudinal wall of the sixth connection element in such way that the whole first end of the griping tool hollow main body is retained between the first and second longitudinal walls in such way that said griping tool hollow main body is able to move up to 90° upwards until reach an horizontal position parallel to the Z axis and downwards until reach a vertical position parallel to the Y axis, taking as reference the fifth connection element resting position, and wherein the resting position for the griping tool comprises the position parallel to the Y axis;

wherein the circular spring remains tightly retained between an internal face of the first lateral wall of the sixth connection element and the circular recess of the first lateral wall of the griping tool hollow main body thus applying a torsional force over said two elements, forcing the griping tool hollow main body to return to its resting position

wherein the third cable exiting the sixth connection element is received inside the elongated cable receiving section and enters the griping tool hollow main body in order to be linked to the cable attaching element, thus connecting the griping element hollow main body directly to a third stepper motor, so that when the third stepper motor pulls the third cable, it pulls the griping tool causing it to move up to 90^0 upwards until reach an horizontal position parallel to the Z axis;

wherein it is further included a circular spring tightly retained around the drum near its first end and between both griping tool hollow main body lateral walls, thus forcing the pliers to open, which comprise its resting position.

wherein the fifth cable exiting the sixth connection element enters the griping tool hollow main body by the circular passage grove, passes by the pulley and is wound around the drum of the pivotal plier, thus directly connecting the fifth stepper motor to the pivotal plier, so that when the fifth stepper motor pulls the fifth cable it causes the drum of the pivotal plier to rotate, thus pivoting the pivotal plier and opening the pliers, wherein the resting position for the pliers is at a closed position.

23. A method for performing minimal invasive surgery in a patient, comprising:

making one incision in patient's body and preparing patient for a laparoscopic operation;

introducing trough said incision a robotic surgical device comprising two or more robotic arms each having: at least six connection elements including manipulating means; at least six joints; driving means connected to each connection element and to the manipulating means for moving each of the connection elements and the manipulating means and remote control means for each robotic arm; wherein each of the arms have at least fourteen degrees of movement; and

operating each robotic arm using the remote control means.

* * * * *

专利名称(译)	机器人手术设备		
公开(公告)号	US20080109014A1	公开(公告)日	2008-05-08
申请号	US11/593011	申请日	2006-11-06
[标]申请(专利权)人(译)	德拉佩纳ALEJANDRO RAMOS		
申请(专利权)人(译)	德拉佩纳ALEJANDRO RAMOS		
当前申请(专利权)人(译)	人类机器人技术S.A. DE C.V.		
[标]发明人	DE LA PENA ALEJANDRO RAMOS		
发明人	DE LA PENA, ALEJANDRO RAMOS		
IPC分类号	A61B19/00		
CPC分类号	A61B19/22 A61B2019/223 A61B19/2203 Y10T74/20305 A61B19/5225 A61B17/00234 A61B2019/2242 A61B34/70 A61B34/30 A61B34/35 A61B34/71 A61B90/37		
其他公开文献	US20090143787A9 US8551114		
外部链接	Espacenet USPTO		

摘要(译)
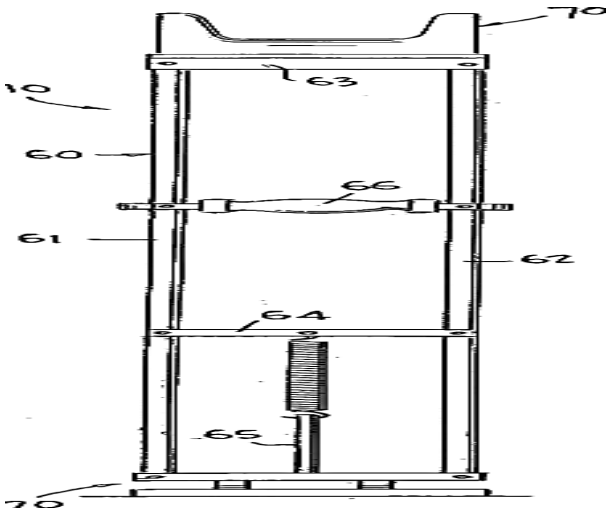
一种用于腹腔镜手术的机器人手术装置，包括两个机械臂，每个机械臂具有至少六个关节，提供总共十四度的运动，精确地再现完成手臂的人体躯干的运动。