US009241690B2

(12) **United States Patent**
Katsuyama

(10) **Patent No.: US 9,241,690 B2**
(45) **Date of Patent: *Jan. 26, 2016**

(54) **ULTRASOUND DIAGNOSTIC APPARATUS AND ULTRASOUND DIAGNOSTIC METHOD**

(71) Applicant: **FUJIFILM Corporation**, Tokyo (JP)

(72) Inventor: **Kimito Katsuyama**, Kanagawa (JP)

(73) Assignee: **FUJIFILM CORPORATION**, Tokyo (JP)

(*) Notice: Subject to any disclaimer, the term of this patent is extended or adjusted under 35 U.S.C. 154(b) by 401 days.

This patent is subject to a terminal disclaimer.

(21) Appl. No.: **13/736,630**

(22) Filed: **Jan. 8, 2013**

(65) **Prior Publication Data**

US 2013/0131516 A1 May 23, 2013

Related U.S. Application Data

(63) Continuation of application No. 12/585,482, filed on Sep. 16, 2009, now Pat. No. 8,372,008.

(30) **Foreign Application Priority Data**

Sep. 25, 2008 (JP) 2008-245519
Mar. 31, 2009 (JP) 2009-088363

(51) **Int. Cl.**
A61B 8/00 (2006.01)
A61B 8/08 (2006.01)
(Continued)

(52) **U.S. Cl.**
CPC ... ***A61B 8/52*** (2013.01); ***A61B 8/00*** (2013.01); ***G01H 5/00*** (2013.01); ***G01N 29/0672*** (2013.01);
(Continued)

(58) **Field of Classification Search**
CPC A61B 8/00; A61B 8/14; G01N 229/0672; G01N 29/07
See application file for complete search history.

(56) **References Cited**

U.S. PATENT DOCUMENTS

2003/0092990 A1 5/2003 Baba et al.
2006/0235302 A1 * 10/2006 Grossman et al. 600/443
(Continued)

FOREIGN PATENT DOCUMENTS

EP 0256686 A1 2/1998
EP 1262148 A1 12/2002
(Continued)

OTHER PUBLICATIONS

Krucker, et al.; Sound Speed Estimation Using Automatic Ultrasound Image Registration; IEEE Transcations on Ultrasonics, Ferroelectrics and Frequency Control; Sep. 2004; vol. 51, No. 9; The Institute of Electrical and Electronics Engineers, Inc.
(Continued)

Primary Examiner — Joel Lamprecht
(74) *Attorney, Agent, or Firm* — Jean C. Edwards, Esq.; Edwards Neils PLLC

(57) **ABSTRACT**

An ultrasound diagnostic apparatus includes: an ultrasound probe including a plurality of ultrasound transducers; a device for determining optimum sound speed values at a lattice point set in a shallower region than a region of interest (ROI) and in the ROI on the basis of an ultrasound detection signal outputted by the ultrasound probe; a device for arithmetically operating a received wave received from the ROI on the basis of the optimum sound speed value; a device for setting an assumed sound speed in the region of interest, obtaining a received wave received from each lattice point on the basis of the assumed sound speed and the optimum sound speed value at the lattice point, and synthesizing received waves at lattice points to obtain a resultant received wave; and a device for determining a local sound speed value in the ROI on the basis of the received wave and the resultant received wave.

19 Claims, 12 Drawing Sheets

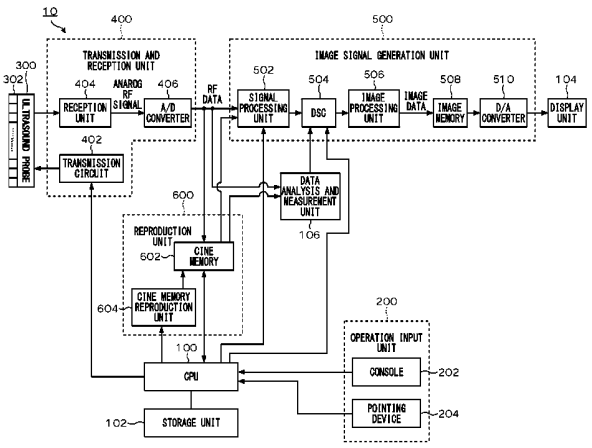

(51) **Int. Cl.**

G01H 5/00	(2006.01)
G01N 29/06	(2006.01)
G01N 29/07	(2006.01)

(52) **U.S. Cl.**

CPC ***G01N 29/07*** (2013.01); *G01N 2291/02475* (2013.01); *G01N 2291/044* (2013.01); *G01N 2291/106* (2013.01)

(56) **References Cited**

U.S. PATENT DOCUMENTS

2009/0003128	A1	1/2009	Jeong et al.	
2009/0093721	A1	4/2009	Katsuyama	
2010/0076312	A1*	3/2010	Katsuyama	600/443
2012/0004550	A1	1/2012	Katsuyama	

FOREIGN PATENT DOCUMENTS

JP	62-072338		4/1987
JP	63-082633	A	4/1988
JP	04-67408		6/1992
JP	5-95946		4/1993
JP	06-105841	A	4/1994
JP	2001-252276	A	9/2001
JP	2003-070788	A	3/2003
JP	2007-007045	A	1/2007
JP	2009-101145	A	5/2009
JP	2009-521980	A	6/2009
JP	2010-012157	A	1/2010
JP	2010-099452	A	5/2010
WO	93/17622		9/1993
WO	2007/075040	A1	7/2007

OTHER PUBLICATIONS

Linzer, et. al.; Ultrasonic Tissue Characterization; Annual Review of Biophysics and Bioengineering; Jun. 1982; pp. 303-329; vol. 11.

Anderson, et. al.; The Direct Estimation of Sound Speed using Pulse-Echo Ultrasound; Journal of the Acoustical Society of America, AIP; Nov. 1998; vol. 104, No. 5; Melville, New York.

Schomberg; An Improved Approach to Reconstructive Ultrasound Tomography;Journal of Physics D: Applied Physics; 1978; pp. L181-L185; vol. 11, No. 15.

Final Office Action issued by the USPTO in corresponding U.S. Appl. No. 13/067,807 on Oct. 31, 2013.

Notification of Reasons for Rejection issued by JPO on Jul. 1, 2014 in connection with corresponding Japanese Patent Application No. 2013-133652.

Notification of Reasons for Rejection issued by JPO on Jul. 3, 2014 in connection with related Japanese Patent Application No. 2010-149208.

Notification of Reasons for Rejection issued by the Japanese Patent Office (JPO) on Sep. 27, 2013, in connection with Japanese Patent Application No. 2010-149208.

U.S. Office Action issued Feb. 4, 2013, in U.S. Appl. No. 13/067,807.

U.S. Office Action issued Sep. 26, 2013, in U.S. Appl. No. 13/067,807.

* cited by examiner

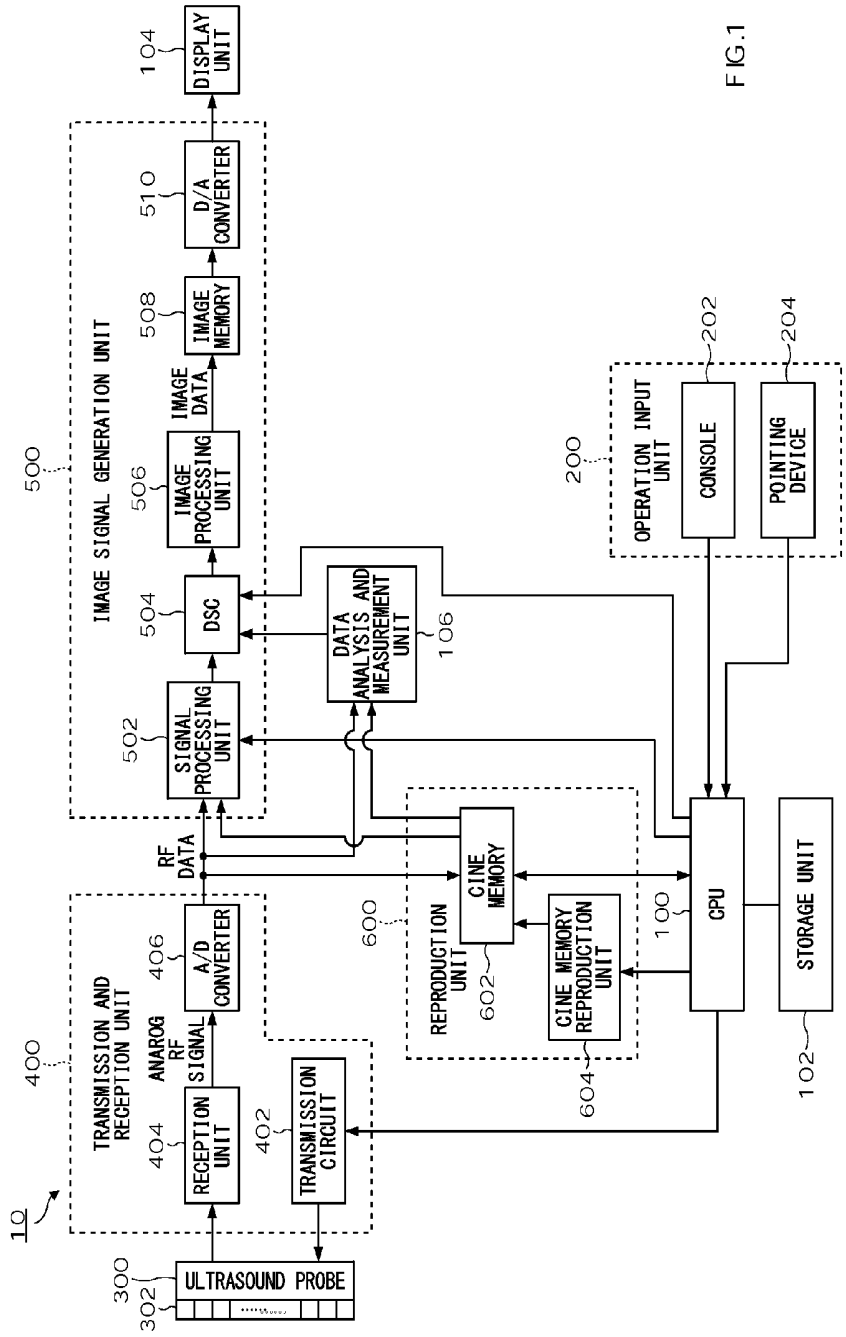
10
TRANSMISSION AND RECEPTION UNIT
400
TRANSMISSION CIRCUIT
402
RECEPTION UNIT
404
ANAROG RF SIGNAL
A/D CONVERTER
406
RF DATA
ULTRASOUND PROBE
300
302
IMAGE SIGNAL GENERATION UNIT
500
SIGNAL PROCESSING UNIT
502
DSC
504
IMAGE PROCESSING UNIT
506
IMAGE DATA
IMAGE MEMORY
508
D/A CONVERTER
510
DISPLAY UNIT
104
DATA ANALYSIS AND MEASUREMENT UNIT
106
REPRODUCTION UNIT
600
CINE MEMORY
602
CINE MEMORY REPRODUCTION UNIT
604
OPERATION INPUT UNIT
200
CONSOLE
202
POINTING DEVICE
204
CPU
100
STORAGE UNIT
102

FIG.1

FIG.2B

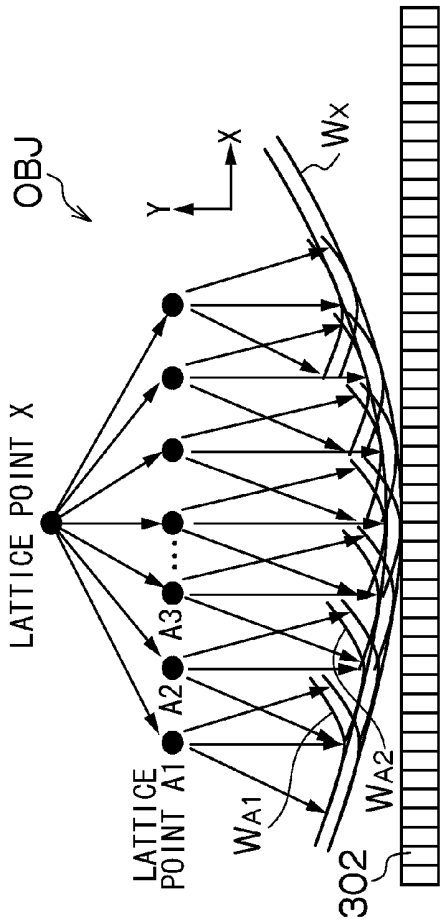
OBJ
Y
X
Wx
LATTICE POINT X
A3
A2
LATTICE POINT A1
WA1
WA2
302

=

FIG.2A

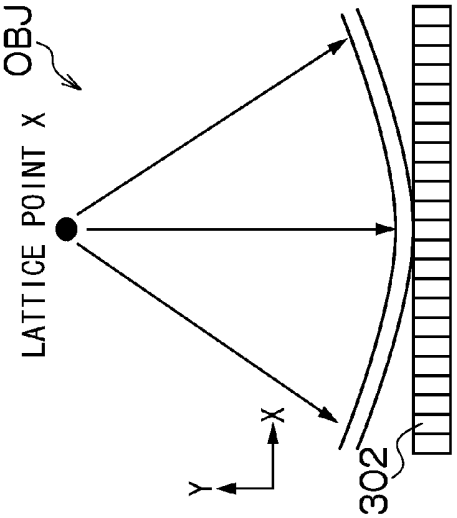
OBJ
LATTICE POINT X
Y
X
302

FIG.3

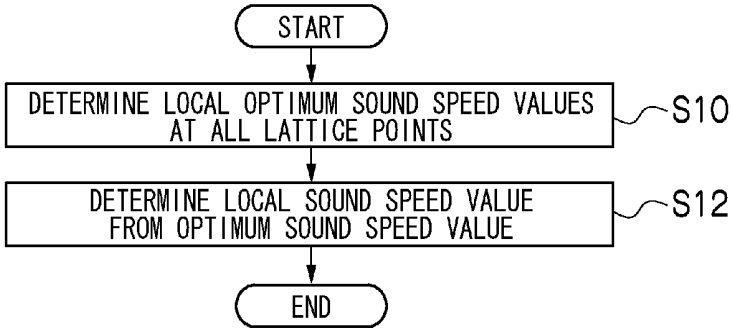
START
DETERMINE LOCAL OPTIMUM SOUND SPEED VALUES AT ALL LATTICE POINTS
S10
DETERMINE LOCAL SOUND SPEED VALUE FROM OPTIMUM SOUND SPEED VALUE
S12
END

FIG.4

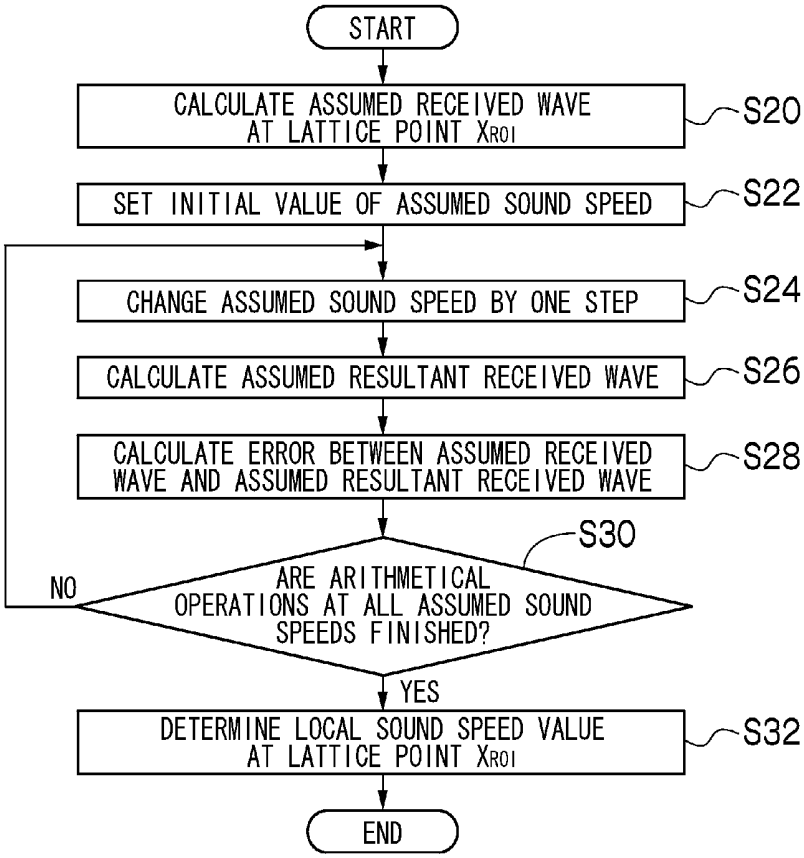
START
CALCULATE ASSUMED RECEIVED WAVE AT LATTICE POINT XROI
S20
SET INITIAL VALUE OF ASSUMED SOUND SPEED
S22
CHANGE ASSUMED SOUND SPEED BY ONE STEP
S24
CALCULATE ASSUMED RESULTANT RECEIVED WAVE
S26
CALCULATE ERROR BETWEEN ASSUMED RECEIVED WAVE AND ASSUMED RESULTANT RECEIVED WAVE
S28
S30
ARE ARITHMETICAL OPERATIONS AT ALL ASSUMED SOUND SPEEDS FINISHED?
NO
YES
DETERMINE LOCAL SOUND SPEED VALUE AT LATTICE POINT XROI
S32
END

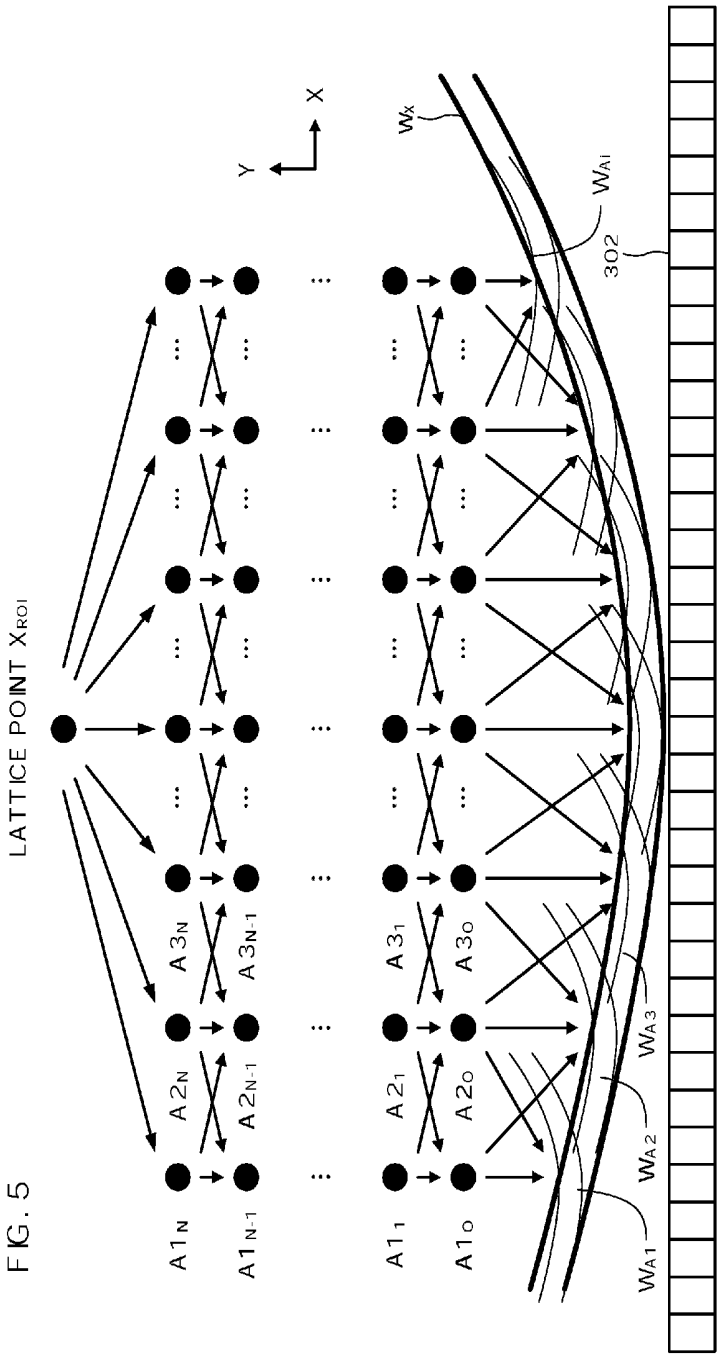
LATTICE POINT X_{ROI}
$A1_N$
$A1_{N-1}$
$A1_1$
$A1_0$
$A2_N$
$A2_{N-1}$
$A2_1$
$A2_0$
$A3_N$
$A3_{N-1}$
$A3_1$
$A3_0$
Y
X
W_X
W_{AI}
302
W_{A1}
W_{A2}
W_{A3}

FIG. 5

FIG.6

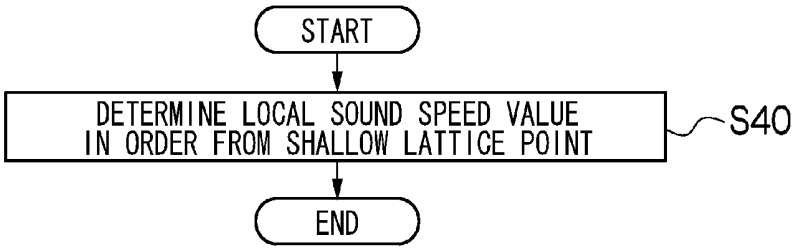
START
DETERMINE LOCAL SOUND SPEED VALUE IN ORDER FROM SHALLOW LATTICE POINT
S40
END

FIG.7

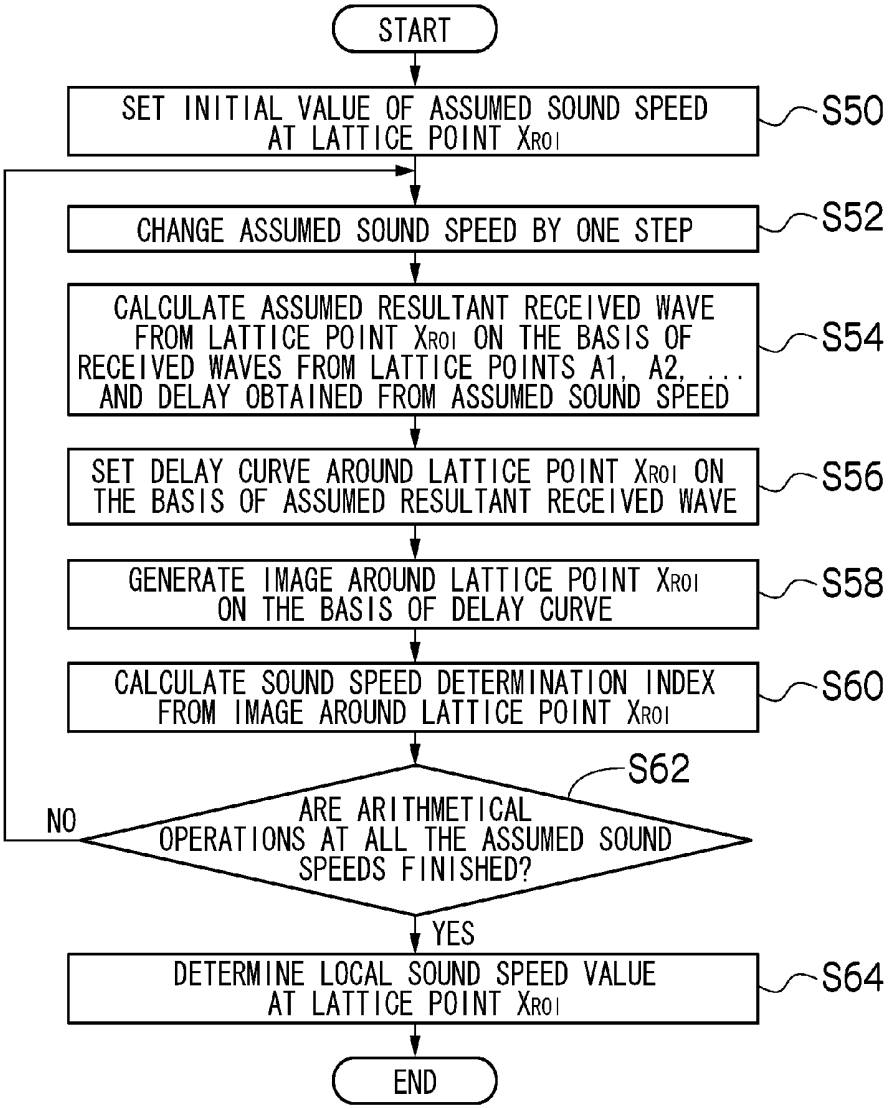
START
SET INITIAL VALUE OF ASSUMED SOUND SPEED AT LATTICE POINT XROI
S50
CHANGE ASSUMED SOUND SPEED BY ONE STEP
S52
CALCULATE ASSUMED RESULTANT RECEIVED WAVE FROM LATTICE POINT XROI ON THE BASIS OF RECEIVED WAVES FROM LATTICE POINTS A1, A2, ... AND DELAY OBTAINED FROM ASSUMED SOUND SPEED
S54
SET DELAY CURVE AROUND LATTICE POINT XROI ON THE BASIS OF ASSUMED RESULTANT RECEIVED WAVE
S56
GENERATE IMAGE AROUND LATTICE POINT XROI ON THE BASIS OF DELAY CURVE
S58
CALCULATE SOUND SPEED DETERMINATION INDEX FROM IMAGE AROUND LATTICE POINT XROI
S60
S62
ARE ARITHMETICAL OPERATIONS AT ALL THE ASSUMED SOUND SPEEDS FINISHED?
NO
YES
DETERMINE LOCAL SOUND SPEED VALUE AT LATTICE POINT XROI
S64
END

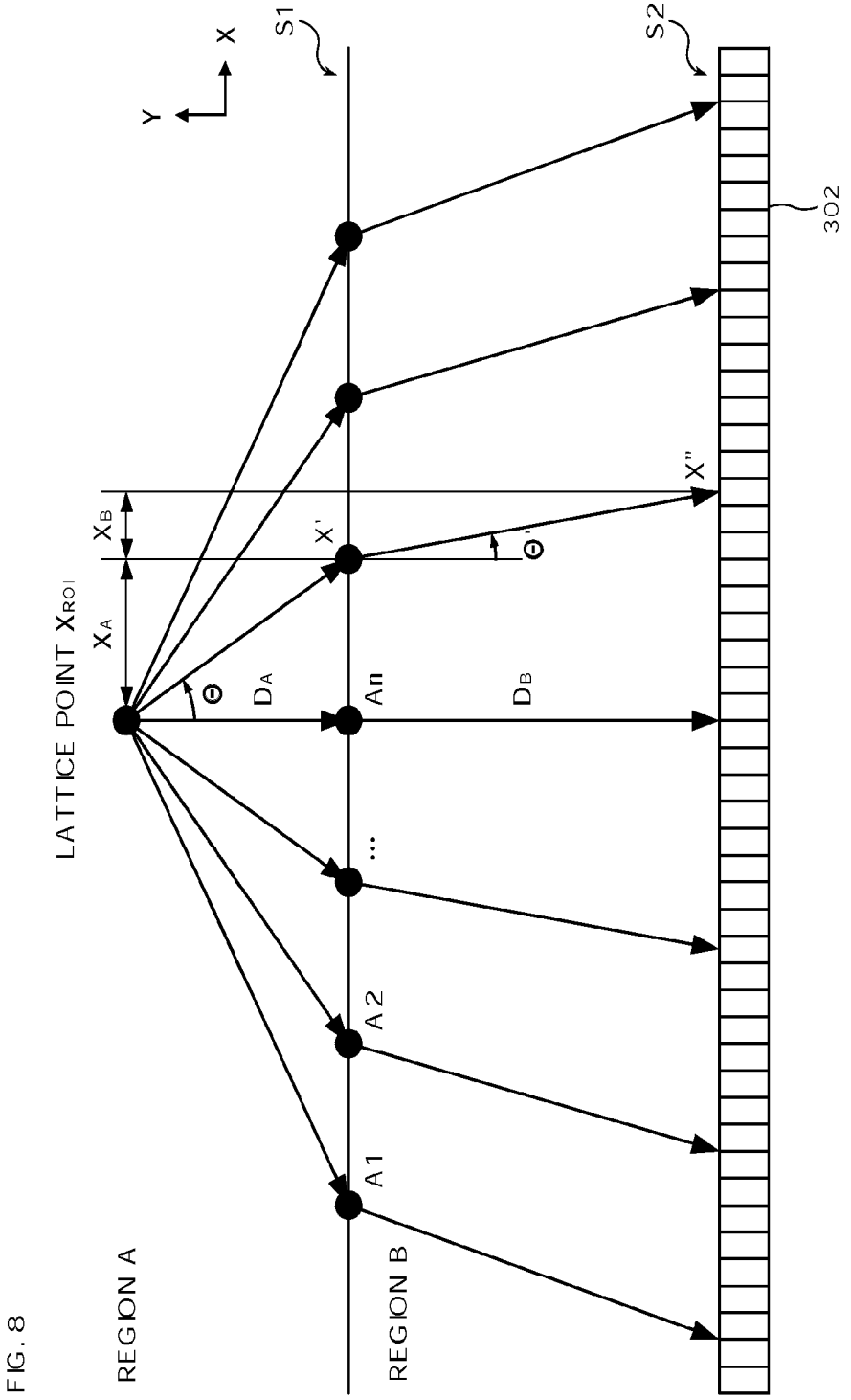
S1
S2
X
Y
302
X''
X'
X_B
X_A
LATTICE POINT X_{ROI}
Θ
Θ'
D_A
D_B
An
...
A2
A1
REGION A
REGION B

FIG. 8

FIG.9

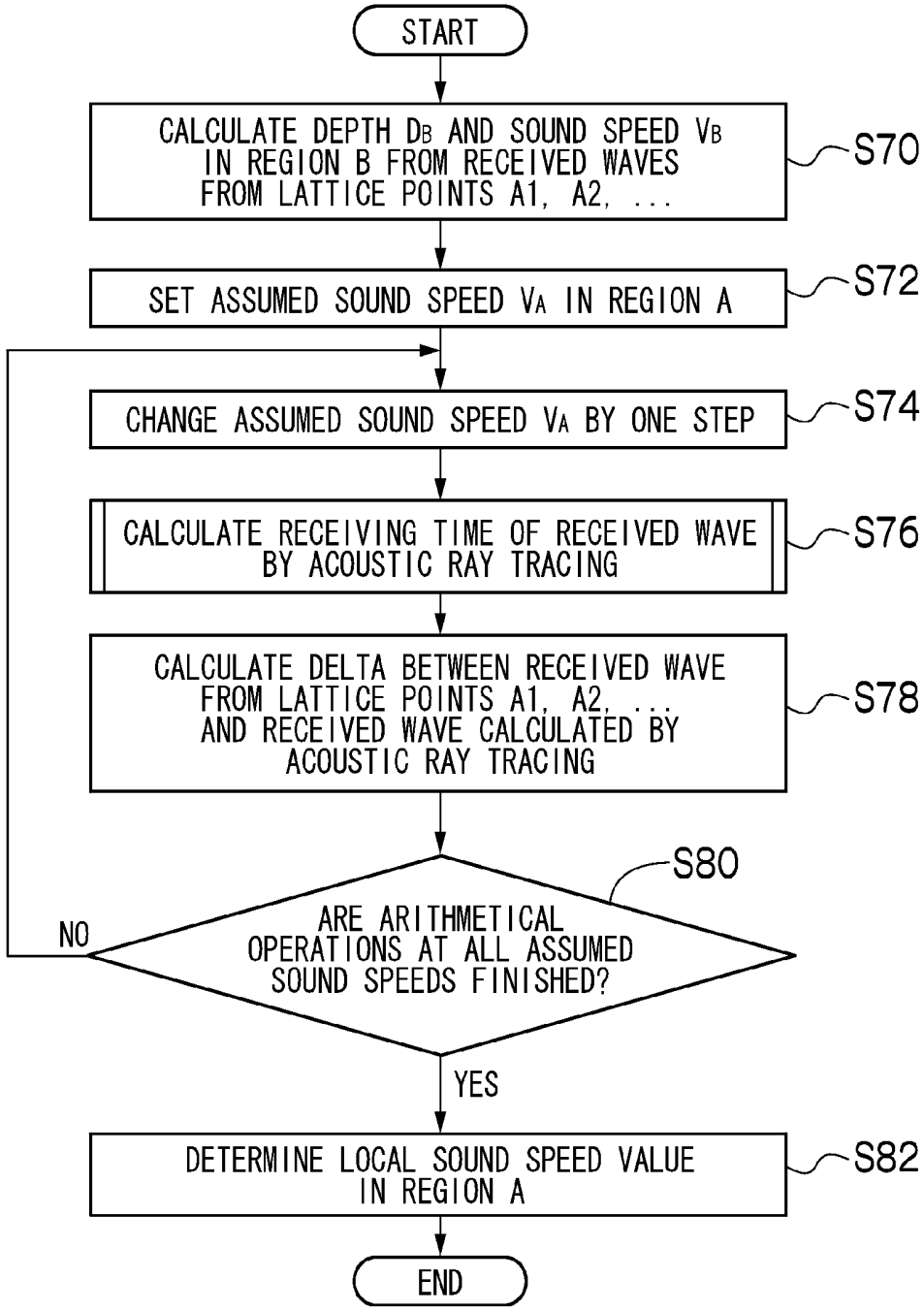
START
CALCULATE DEPTH D_B AND SOUND SPEED V_B IN REGION B FROM RECEIVED WAVES FROM LATTICE POINTS A1, A2, ...
S70
SET ASSUMED SOUND SPEED V_A IN REGION A
S72
CHANGE ASSUMED SOUND SPEED V_A BY ONE STEP
S74
CALCULATE RECEIVING TIME OF RECEIVED WAVE BY ACOUSTIC RAY TRACING
S76
CALCULATE DELTA BETWEEN RECEIVED WAVE FROM LATTICE POINTS A1, A2, ... AND RECEIVED WAVE CALCULATED BY ACOUSTIC RAY TRACING
S78
S80
ARE ARITHMETICAL OPERATIONS AT ALL ASSUMED SOUND SPEEDS FINISHED?
NO
YES
DETERMINE LOCAL SOUND SPEED VALUE IN REGION A
S82
END

FIG.10

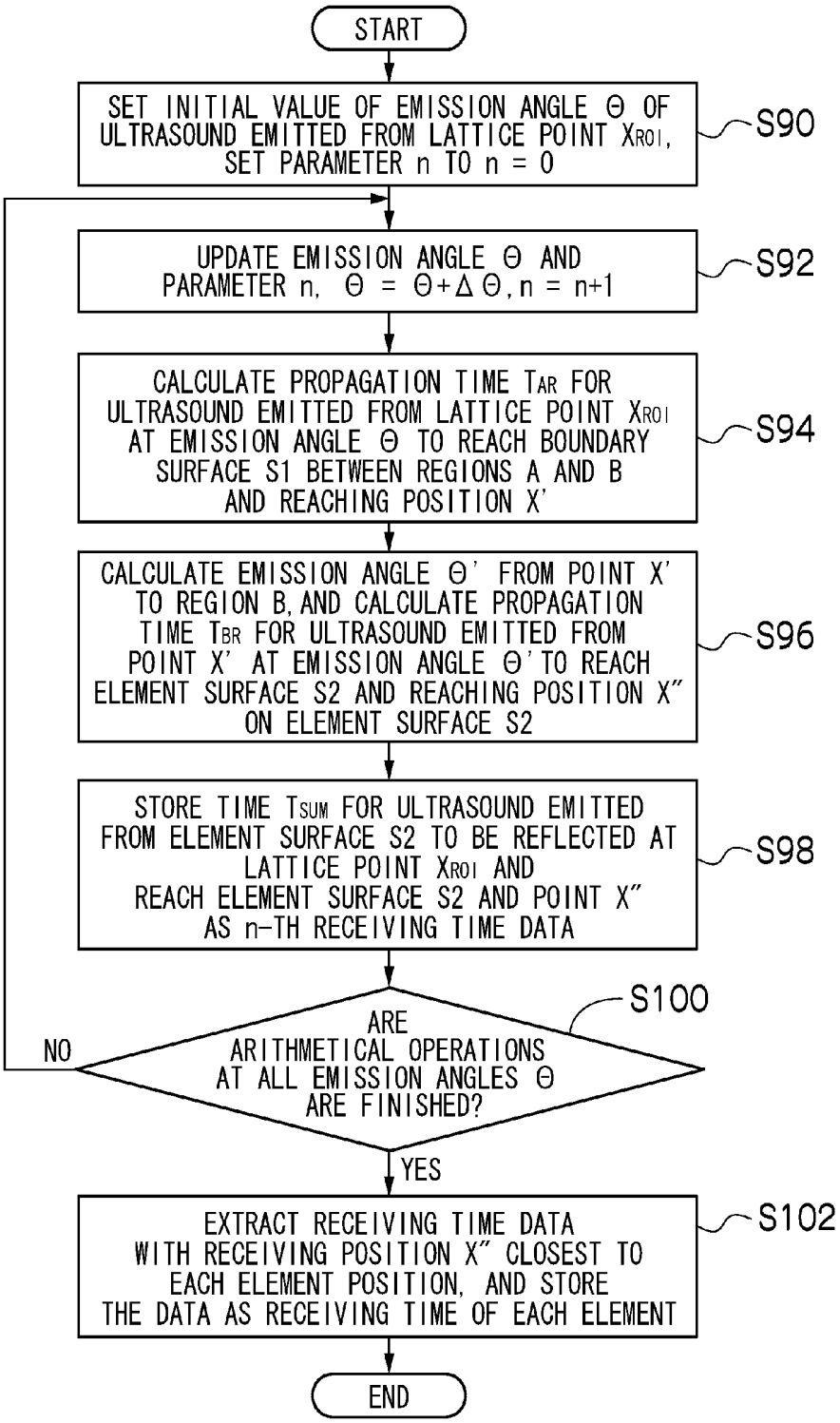
START
SET INITIAL VALUE OF EMISSION ANGLE Θ OF ULTRASOUND EMITTED FROM LATTICE POINT X_{ROI}, SET PARAMETER n TO n = 0
S90
UPDATE EMISSION ANGLE Θ AND PARAMETER n, Θ = Θ+ΔΘ, n = n+1
S92
CALCULATE PROPAGATION TIME T_{AR} FOR ULTRASOUND EMITTED FROM LATTICE POINT X_{ROI} AT EMISSION ANGLE Θ TO REACH BOUNDARY SURFACE S1 BETWEEN REGIONS A AND B AND REACHING POSITION X'
S94
CALCULATE EMISSION ANGLE Θ' FROM POINT X' TO REGION B, AND CALCULATE PROPAGATION TIME T_{BR} FOR ULTRASOUND EMITTED FROM POINT X' AT EMISSION ANGLE Θ' TO REACH ELEMENT SURFACE S2 AND REACHING POSITION X" ON ELEMENT SURFACE S2
S96
STORE TIME T_{SUM} FOR ULTRASOUND EMITTED FROM ELEMENT SURFACE S2 TO BE REFLECTED AT LATTICE POINT X_{ROI} AND REACH ELEMENT SURFACE S2 AND POINT X" AS n-TH RECEIVING TIME DATA
S98
S100
ARE ARITHMETICAL OPERATIONS AT ALL EMISSION ANGLES Θ ARE FINISHED?
NO
YES
EXTRACT RECEIVING TIME DATA WITH RECEIVING POSITION X" CLOSEST TO EACH ELEMENT POSITION, AND STORE THE DATA AS RECEIVING TIME OF EACH ELEMENT
S102
END

FIG. 11

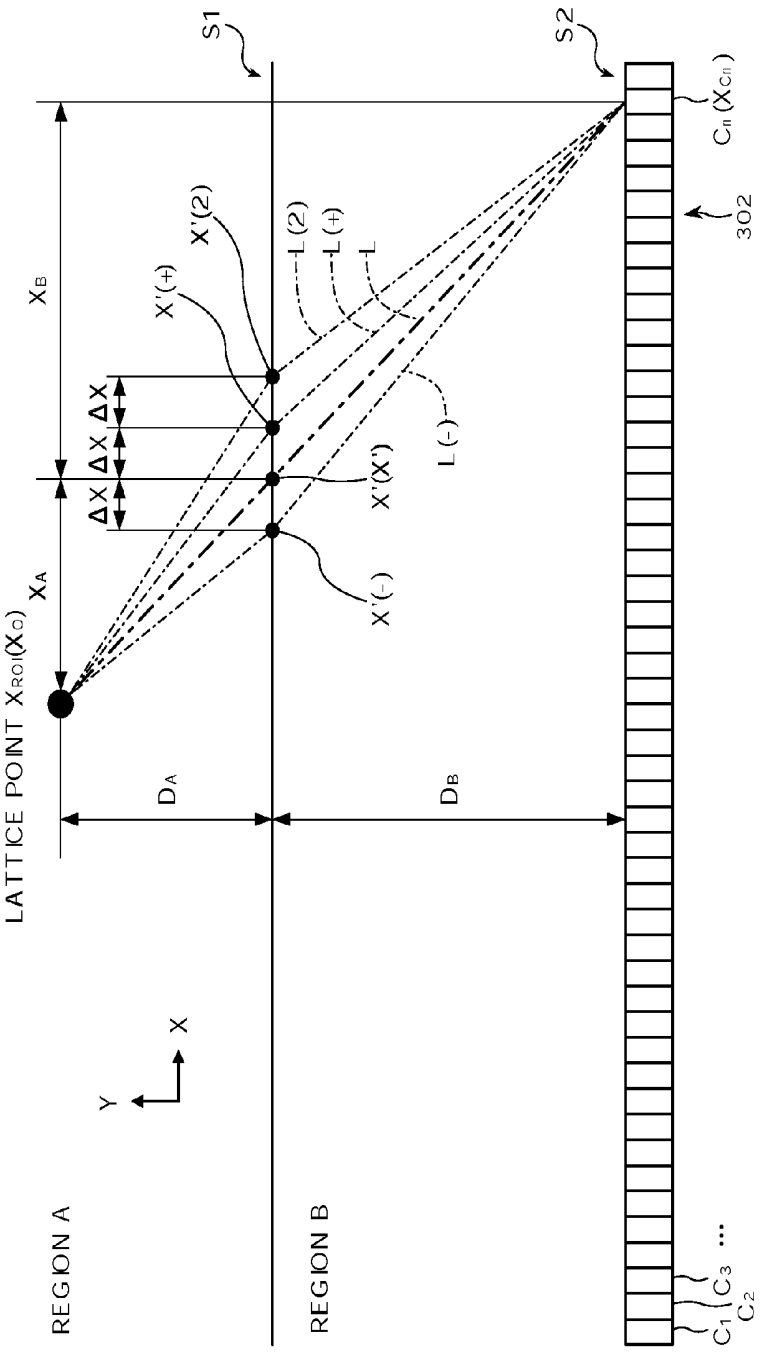
S1
S2
C_n (X_{Cn})
302
X_B
X_A
X'(2)
X'(+)
X'(X')
X'(-)
L (2)
L (+)
L
L (-)
ΔX
ΔX
ΔX
LATTICE POINT X_{ROI}(X_O)
D_A
D_B
X
Y
REGION A
REGION B
C_1
C_2
C_3 ...

FIG.12

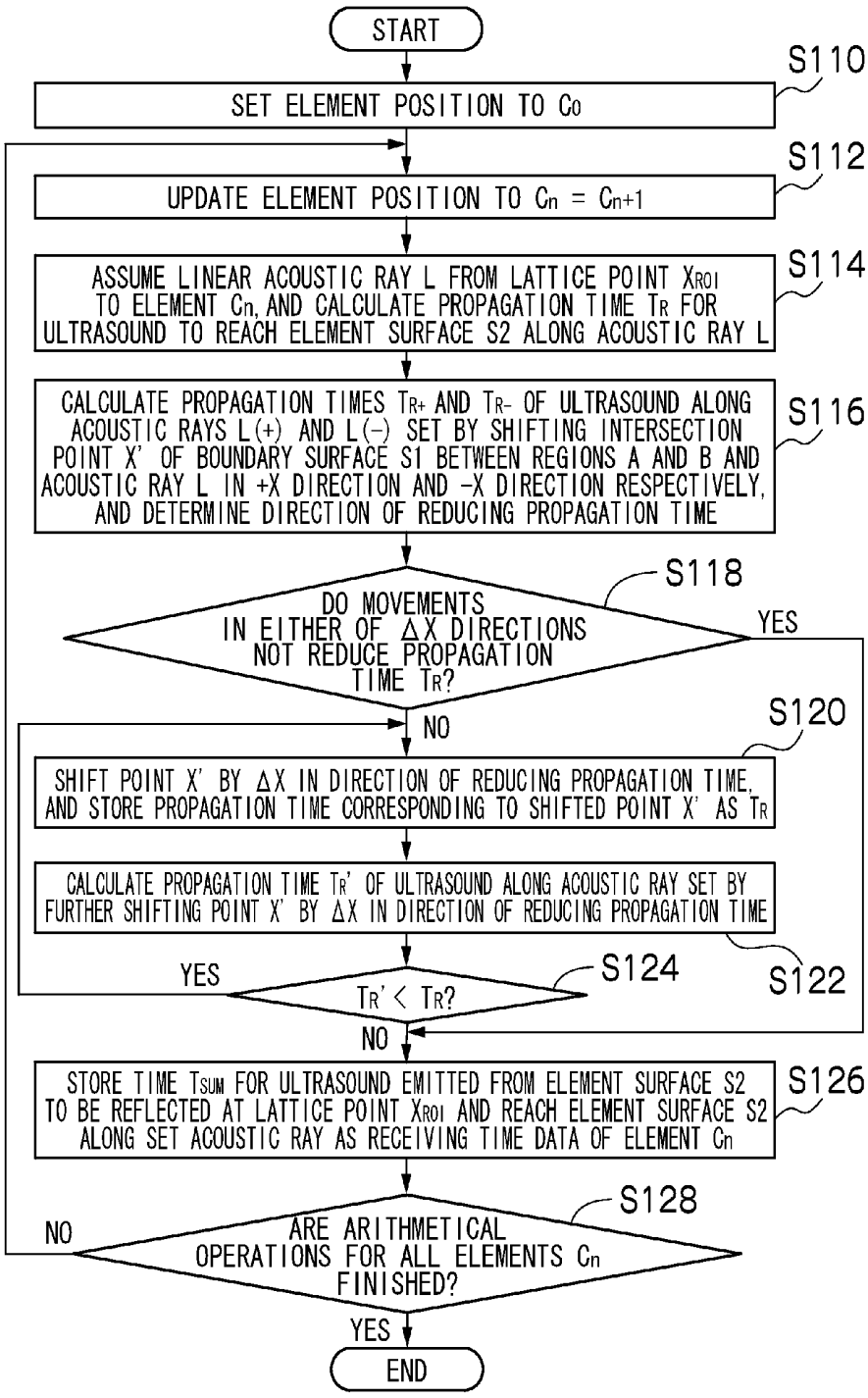
START
S110
SET ELEMENT POSITION TO C0
S112
UPDATE ELEMENT POSITION TO Cn = Cn+1
S114
ASSUME LINEAR ACOUSTIC RAY L FROM LATTICE POINT XROI TO ELEMENT Cn, AND CALCULATE PROPAGATION TIME TR FOR ULTRASOUND TO REACH ELEMENT SURFACE S2 ALONG ACOUSTIC RAY L
S116
CALCULATE PROPAGATION TIMES TR+ AND TR- OF ULTRASOUND ALONG ACOUSTIC RAYS L(+) AND L(-) SET BY SHIFTING INTERSECTION POINT X' OF BOUNDARY SURFACE S1 BETWEEN REGIONS A AND B AND ACOUSTIC RAY L IN +X DIRECTION AND -X DIRECTION RESPECTIVELY, AND DETERMINE DIRECTION OF REDUCING PROPAGATION TIME
S118
DO MOVEMENTS IN EITHER OF ΔX DIRECTIONS NOT REDUCE PROPAGATION TIME TR?
YES
NO
S120
SHIFT POINT X' BY ΔX IN DIRECTION OF REDUCING PROPAGATION TIME, AND STORE PROPAGATION TIME CORRESPONDING TO SHIFTED POINT X' AS TR
CALCULATE PROPAGATION TIME TR' OF ULTRASOUND ALONG ACOUSTIC RAY SET BY FURTHER SHIFTING POINT X' BY ΔX IN DIRECTION OF REDUCING PROPAGATION TIME
S122
YES
S124
TR' < TR?
NO
S126
STORE TIME TSUM FOR ULTRASOUND EMITTED FROM ELEMENT SURFACE S2 TO BE REFLECTED AT LATTICE POINT XROI AND REACH ELEMENT SURFACE S2 ALONG SET ACOUSTIC RAY AS RECEIVING TIME DATA OF ELEMENT Cn
S128
NO
ARE ARITHMETICAL OPERATIONS FOR ALL ELEMENTS Cn FINISHED?
YES
END

FIG.13

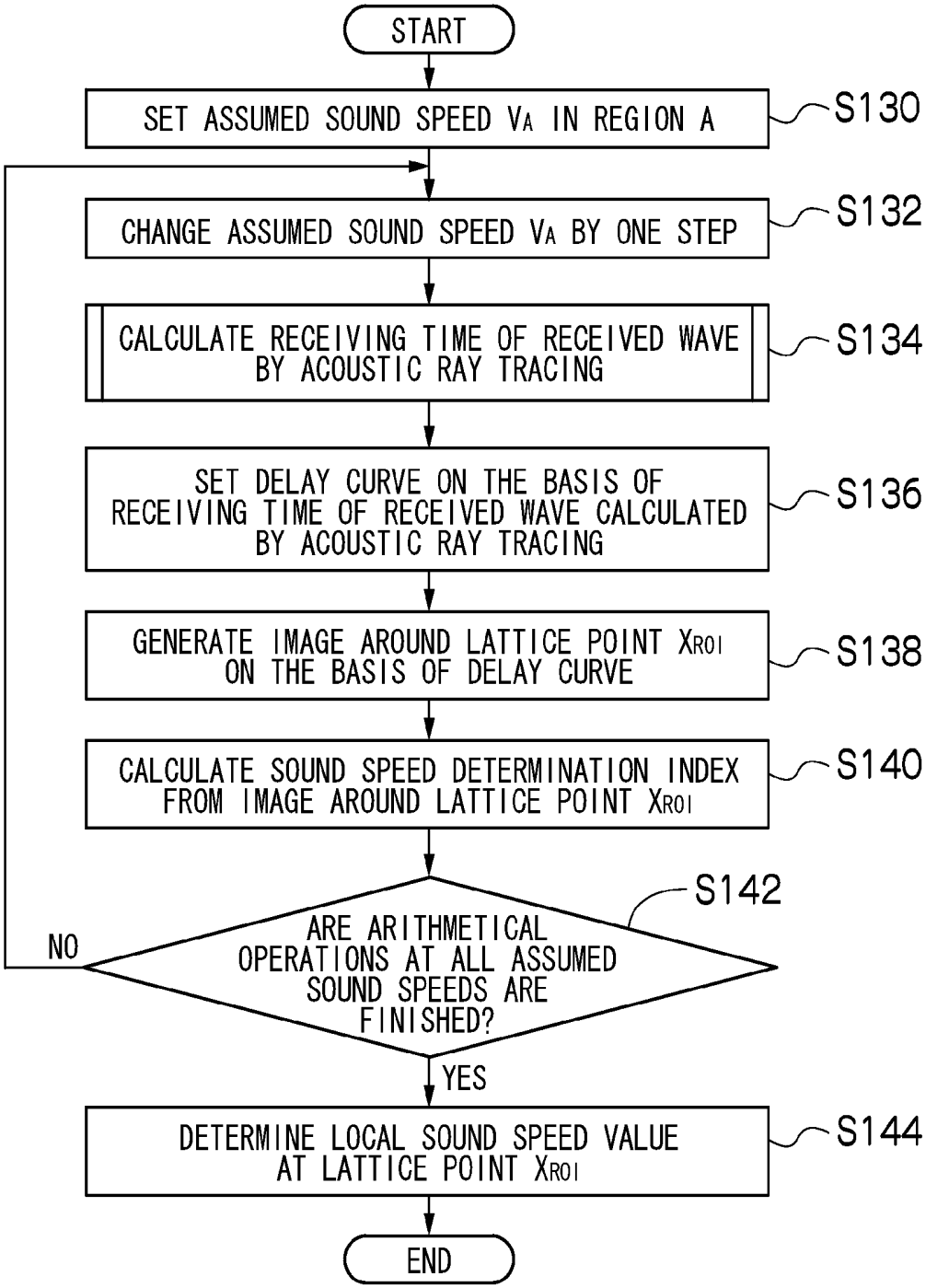
START
SET ASSUMED SOUND SPEED VA IN REGION A
S130
CHANGE ASSUMED SOUND SPEED VA BY ONE STEP
S132
CALCULATE RECEIVING TIME OF RECEIVED WAVE BY ACOUSTIC RAY TRACING
S134
SET DELAY CURVE ON THE BASIS OF RECEIVING TIME OF RECEIVED WAVE CALCULATED BY ACOUSTIC RAY TRACING
S136
GENERATE IMAGE AROUND LATTICE POINT XROI ON THE BASIS OF DELAY CURVE
S138
CALCULATE SOUND SPEED DETERMINATION INDEX FROM IMAGE AROUND LATTICE POINT XROI
S140
ARE ARITHMETICAL OPERATIONS AT ALL ASSUMED SOUND SPEEDS ARE FINISHED?
S142
NO
YES
DETERMINE LOCAL SOUND SPEED VALUE AT LATTICE POINT XROI
S144
END

FIG.14A

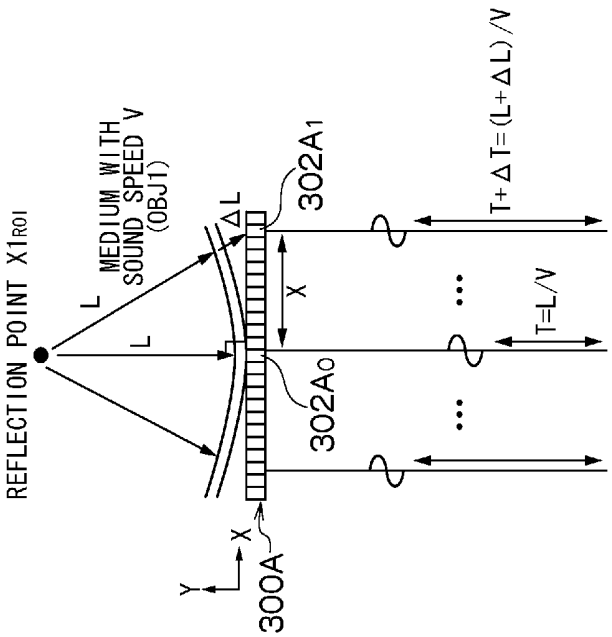

FIG.14B

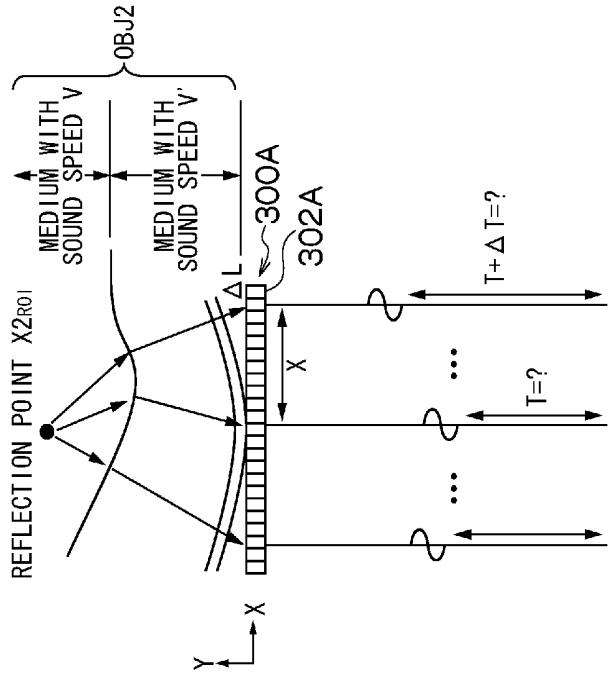

ULTRASOUND DIAGNOSTIC APPARATUS AND ULTRASOUND DIAGNOSTIC METHOD

CROSS-REFERENCE TO RELATED APPLICATIONS

The present application is a continuation of U.S. patent application Ser. No. 12/585,482, which was filed Sep. 16, 2009, now U.S. Pat. No. 8,372,008, which issued Feb. 12, 2013, which claims priority from Japanese Patent Application No. 2008-245519, filed Sep. 25, 2008, and from Japanese Patent Application No. 2009-088363, filed Mar. 31, 2009, the contents of all of which are herein incorporated by reference in their entirety.

BACKGROUND OF THE INVENTION

1. Field of the Invention

The present invention relates to an ultrasound diagnostic apparatus and an ultrasound diagnostic method, and more particularly to an ultrasound diagnostic apparatus and an ultrasound diagnostic method for taking an ultrasound image of a subject using ultrasound and displaying the ultrasound image.

2. Description of the Related Art

Conventionally, attempts have been made to measure a sound speed value in a part (a region to be diagnosed) in a subject (hereinafter referred to as a local sound speed value) using ultrasound. For example, proposed methods include a method of arranging two transducers for transmitting and receiving to face each other and obtaining a sound speed value in a subject based on a distance between the transducers and a propagation time of ultrasound, and a method of using two pairs of transducers arranged at a predetermined interval as the transducers for transmitting and receiving respectively and obtaining a propagation speed based on a propagation time of ultrasound between the transducers, wave transmitting angles and wave receiving angles, and the interval between the transducers of each pair.

Japanese Patent Application Laid-Open No. 5-95946 discloses a measurement method of a local sound speed value described below. In Japanese Patent Application Laid-Open No. 5-95946, a wave transmitting transducer transmits ultrasound into a subject while changing an emission angle, a wave receiving transducer receives the ultrasound while changing an incident angle, and times elapsing between transmitting and receiving of the ultrasound are all stored in a memory. Then, assumed sound speed distribution is set, and a time elapsing between transmitting and receiving of the ultrasound for each emission angle and each incident angle is calculated on the basis of the sound speed distribution. Then, the assumed sound speed distribution is corrected so as to minimize a difference between a calculated value and an actual measured value of the time, and a sound speed value in the subject is obtained from sound speed distribution obtained finally.

SUMMARY OF THE INVENTION

A sound speed value V in a subject OBJ**1** including a medium with a constant sound speed value can be calculated as described below. As shown in FIG. **14**A, a time T elapsing between a time ultrasound is reflected at a reflection point (region) $X1_{ROI}$ and a time the ultrasound is received by an element $\mathbf{302}A_0$ located immediately below the reflection point $X1_{ROI}$ is T=L/V, where L is a distance between the reflection point $X1_{ROI}$ in the subject OBJ**1** and an ultrasound probe **300**A. When T+ΔT is a time elapsing between a time the ultrasound is reflected at the reflection point $X1_{ROI}$ and a time the ultrasound is received by an element $\mathbf{302}A_i$ located at a distance X from the element $\mathbf{302}A_0$ in an X direction (an arrangement direction of elements **302**A), a delay time ΔT between the element $\mathbf{302}A_0$ and the element $\mathbf{302}A_i$ is expressed by the following expression (1):

$$\Delta T=\Delta L/V(\text{where } \Delta L=\sqrt{L^2+X^2}-L) \quad (1)$$

Thus, time [2T, 2T+ΔT] elapsing between a time the ultrasound is transmitted and reflected at the reflection point $X1_{ROI}$ the time T later and a time the ultrasound is received by the elements can be measured to uniquely obtain the distance L between the ultrasound probe **300**A and the reflection point $X1_{ROI}$ and the speed V.

When the ultrasound from the reflection point $X1_{ROI}$ can be clearly identified, L and V can be determined from the times measured at two different elements having a known positional relationship. However, ultrasound detection signals output from the elements **302**A are generally generated by interference of signals from countless reflection points, and it is difficult to identify a signal from a specific reflection point. Thus, actually, the distance L to the reflection point $X1_{ROI}$, the delay time ΔT, and the sound speed value V are uniquely obtained based on a space frequency, sharpness, and contrast of a reconstructed image in a region of interest near the reflection point $X1_{ROI}$.

As described above, when the sound speed in the subject is constant, the sound speed value can be obtained, while when the sound speed in the subject is not constant as in a subject OBJ**2** shown in FIG. **14**B, it is difficult to obtain a distance L between the ultrasound probe **300**A and a reflection point (region) $X2_{ROI}$ and sound speed values V and V' by the above described method.

The present invention is achieved in view of these circumstances, and has an object to provide an ultrasound diagnostic apparatus and an ultrasound diagnostic method which enable to calculate a sound speed value (local sound speed value) in any region to be diagnosed in a subject with high accuracy.

To solve the above described problems, an ultrasound diagnostic apparatus of a first aspect of the present invention includes: an ultrasound probe including a plurality of ultrasound transducers for transmitting ultrasound to a subject and receiving the ultrasound reflected by the subject to output an ultrasound detection signal; an optimum sound speed value determination device for determining optimum sound speed values at a lattice point set in a shallower region than a region of interest in the subject and in the region of interest on the basis of the ultrasound detection signal; a first arithmetical operation device for arithmetically operating a received wave received from the region of interest when the ultrasound is transmitted to the region of interest on the basis of the optimum sound speed value in the region of interest; a second arithmetical operation device for setting an assumed sound speed in the region of interest, obtaining a received wave received from each lattice point when the ultrasound is transmitted to the region of interest on the basis of the assumed sound speed and the optimum sound speed value at the lattice point, and synthesizing received waves at lattice points to obtain a resultant received wave; and a local sound speed value determination device for making a determination of a local sound speed value in the region of interest on the basis of the received wave and the resultant received wave.

According to the first aspect, the local sound speed value in the subject can be determined with high accuracy using an amplitude image obtained in generation of a B (Brightness) mode image, RF (Radio Frequency) data, or data on the

received waves received by the ultrasound transducer elements. The local sound speed value obtained as described above can be used to detect a lesion in the subject with higher accuracy. In the first aspect, a configuration exclusively for transmitting ultrasound and a configuration exclusively for receiving ultrasound are not required to be arranged separately, in order to measure the local sound speed value.

The ultrasound diagnostic apparatus of a second aspect of the present invention is such that the local sound speed value determination device determines the assumed sound speed used for arithmetical operation of a received wave at which a delta between the received wave and the resultant received wave is minimized, as a local sound speed value in the region of interest, in the first aspect.

An ultrasound diagnostic apparatus of a third aspect of the present invention includes: an ultrasound probe including a plurality of ultrasound transducers for transmitting ultrasound to a subject and receiving the ultrasound reflected by the subject to output an ultrasound detection signal; an optimum sound speed value determination device for determining an optimum sound speed value in a region between a plurality of lattice points set in a shallower region than a region of interest in the subject and the ultrasound probe on the basis of the ultrasound detection signal; a resultant received wave obtaining device for obtaining received waves received from the plurality of lattice points, and synthesizing the obtained received waves to obtain a first resultant received wave; an arithmetical operation device for setting an assumed sound speed in the region of interest, tracing an acoustic ray of ultrasound transmitted from the ultrasound probe to the region of interest on the basis of the assumed sound speed and optimum sound speed values at the plurality of lattice points, obtaining received waves reflected at the region of interest and reaching the plurality of ultrasound transducers through the plurality of lattice points, and synthesizing the obtained received waves to obtain a second resultant received wave; and a local sound speed value determination device for making a determination of a local sound speed value in the region of interest on the basis of the first and the second resultant received waves.

According to the third aspect, the acoustic ray tracing of the ultrasound reflected at the region of interest in the subject is performed, and the local sound speed value in the region of interest is determined using the received waves directly reaching the ultrasound transducers (elements) of the ultrasound probe, thereby allowing the local sound speed value to be accurately calculated with fewer processes.

The ultrasound diagnostic apparatus of a fourth aspect of the present invention is such that the local sound speed value determination device determines an assumed sound speed used for arithmetical operation of a received wave at which a delta between the first resultant received wave and the second resultant received wave is minimized, as a local sound speed value in the region of interest, in the third aspect.

An ultrasound diagnostic apparatus of a fifth aspect of the present invention includes: an ultrasound probe including a plurality of ultrasound transducers for transmitting ultrasound to a subject and receiving the ultrasound reflected by the subject to output an ultrasound detection signal; an arithmetical operation device for setting an assumed sound speed in a certain region of interest in the subject, obtaining received waves received from a plurality of lattice points set in a shallower region than the region of interest when ultrasound is transmitted from the ultrasound probe to the region of interest on the basis of the assumed sound speed, and synthesizing the received waves from the lattice points to obtain a resultant received wave; a sound speed determination index arithmetical operation device for obtaining a delay from the received waves from the lattice points to generate an image in the region of interest on the basis of the delay, and obtaining a sound speed determination index on the basis of the image; and a local sound speed value determination device for making a determination of a local sound speed value in the region of interest on the basis of the sound speed determination index, and repeating the determination of the local sound speed value in order from a lattice point in a shallow region to determine the local sound speed value in the subject.

According to the fifth aspect, the local sound speed value is determined in order from a shallow layer in the subject, thereby allowing the local sound speed value in the subject to be determined with high accuracy.

The ultrasound diagnostic apparatus of a sixth aspect of the present invention is such that the sound speed determination index arithmetical operation device obtains the sound speed determination index on the basis of at least one of contrast of the image, a space frequency of the image in a scanning direction, and dispersion of the space frequency, in the fifth aspect.

An ultrasound diagnostic apparatus of a seventh aspect of the present invention includes: an ultrasound probe including a plurality of ultrasound transducers for transmitting ultrasound to a subject and receiving the ultrasound reflected by the subject to output an ultrasound detection signal; an arithmetical operation device for setting an assumed sound speed in a certain region of interest in the subject, tracing an acoustic ray of the ultrasound transmitted from the ultrasound probe to the region of interest, and obtaining received waves reflected at the region of interest and reaching the plurality of ultrasound transducers through the plurality of lattice points set in a shallower region than the region of interest on the basis of the assumed sound speed; a sound speed determination index arithmetical operation device for obtaining a delay from the received waves from the plurality of lattice points to generate an image in the region of interest on the basis of the delay, and obtaining a sound speed determination index on the basis of the image; and a local sound speed value determination device for making a determination of a local sound speed value in the region of interest on the basis of the sound speed determination index, and repeating the determination of the local sound speed value in order from a lattice point in a shallow region to determine the local sound speed value in the subject.

According to the seventh aspect, acoustic ray tracing is repeatedly conducted in order from the shallow layer in the subject to determine the local sound speed value, thereby allowing the local sound speed value in the subject to be determined with high accuracy.

The ultrasound diagnostic apparatus of an eighth aspect of the present invention further includes a lattice point setting device for setting a lattice point on a boundary between regions with a substantially uniform sound speed in the subject, in any one of the first to seventh aspects.

The ultrasound diagnostic apparatus of a ninth aspect of the present invention further includes an amplitude image generation device (**100**, **502**) for performing at least one of a transmitting focus process and a receiving focus process on the basis of the determination result of the local sound speed value in the subject to generate an amplitude image indicating an amplitude of the received wave with brightness of a point, in any one of the first to eighth aspects.

The ultrasound diagnostic apparatus of a tenth aspect of the present invention further includes a display device for displaying the determination result of the local sound speed value, in any one of the first to eighth aspects.

The ultrasound diagnostic apparatus of an eleventh aspect of the present invention further includes an amplitude image generation device for generating an amplitude image indicating an amplitude of the received wave with brightness of a point on the basis of the ultrasound detection signal, wherein the display device displays the determination result of the local sound speed value so as to be superimposed on the amplitude image or placed with the amplitude image side by side, in the tenth aspect.

The ultrasound diagnostic apparatus of a twelfth aspect of the present invention further includes an amplitude image generation device for generating an amplitude image indicating an amplitude of the ultrasonic echo with brightness of a point on the basis of the ultrasound detection signal, wherein the display device displays the determination result of the local sound speed value by changing brightness or color of the amplitude image, in the tenth aspect.

The ultrasound diagnostic apparatus of a thirteenth aspect of the present invention further includes a display mode switching device for switching a display mode between a first display mode in which the amplitude image is displayed alone and a second display mode in which the determination result of the local sound speed value in the subject is displayed, in the eleventh or twelfth aspect.

According to the tenth to thirteenth aspects, a device for an operator to observe the determination result of the local sound speed value can be provided in addition to the above described advantages.

An ultrasound diagnostic method of a fourteenth aspect of the present invention includes: an optimum sound speed value determination step of determining optimum sound speed values at a lattice point set in a shallower region than a region of interest in a subject and in the region of interest on the basis of an ultrasound detection signal obtained by an ultrasound probe, the ultrasound probe including a plurality of ultrasound transducers for transmitting ultrasound to the subject and receiving the ultrasound reflected by the subject to output the ultrasound detection signal; a first arithmetical operation step of arithmetically operating a received wave received from the region of interest when the ultrasound is transmitted to the region of interest on the basis of the optimum sound speed value in the region of interest; a second arithmetical operation step of setting an assumed sound speed in the region of interest, obtaining a received wave received from each lattice point when the ultrasound is transmitted to the region of interest on the basis of the assumed sound speed and the optimum sound speed value at the lattice point, and synthesizing received waves at lattice points to obtain a resultant received wave; and a local sound speed value determination step of making a determination of a local sound speed value in the region of interest on the basis of the received wave and the resultant received wave.

The ultrasound diagnostic method of a fifteenth aspect of the present invention is such that the assumed sound speed used for arithmetical operation of a received wave at which a delta between the received wave and the resultant received wave is minimized is determined as a local sound speed value in the region of interest in the local sound speed value determination step in the fourteenth aspect.

An ultrasound diagnostic method of a sixteenth aspect of the present invention includes: an optimum sound speed value determination step of determining an optimum sound speed value in a region between a plurality of lattice points set in a shallower region than a region of interest in a subject and an ultrasound probe on the basis of an ultrasound detection signal obtained by the ultrasound probe, the ultrasound probe including a plurality of ultrasound transducers for transmitting ultrasound to the subject and receiving the ultrasound reflected by the subject to output the ultrasound detection signal; a resultant received wave obtaining step of obtaining received waves received from the plurality of lattice points, and synthesizing the obtained received waves to obtain a first resultant received wave; an arithmetical operation step of setting an assumed sound speed in the region of interest, tracing an acoustic ray of ultrasound transmitted from the ultrasound probe to the region of interest on the basis of the assumed sound speed and optimum sound speed values at the plurality of lattice points, obtaining received waves reflected at the region of interest and reaching the plurality of ultrasound transducers through the plurality of lattice points, and synthesizing the obtained received waves to obtain a second resultant received wave; and a local sound speed value determination step of making a determination of a local sound speed value in the region of interest on the basis of the first and the second resultant received waves.

The ultrasound diagnostic method of a seventeenth aspect of the present invention is such that the assumed sound speed used for arithmetical operation of a received wave at which a delta between the first resultant received wave and the second resultant received wave is minimized is determined as a local sound speed value in the region of interest in the local sound speed value determination step in the sixteenth aspect.

An ultrasound diagnostic method of an eighteenth aspect of the present invention includes: an arithmetical operation step of setting an assumed sound speed in a certain region of interest in a subject, obtaining received waves received from a plurality of lattice points set in a shallower region than the region of interest when ultrasound is transmitted from an ultrasound probe to the region of interest on the basis of the assumed sound speed, and synthesizing the received waves from the lattice points to obtain a resultant received wave; a sound speed determination index arithmetical operation step of obtaining a delay from the received waves from the lattice points to generate an image in the region of interest on the basis of the delay, and obtaining a sound speed determination index on the basis of the image; and a local sound speed value determination step of making a determination of the local sound speed value in the region of interest on the basis of the sound speed determination index, and repeating the determination of the local sound speed value in order from a lattice point in a shallow region to determine the local sound speed value in the subject.

The ultrasound diagnostic method of a nineteenth aspect of the present invention is such that the sound speed determination index is obtained on the basis of at least one of contrast of the image, a space frequency of the image in a scanning direction, and dispersion of the space frequency in the sound speed determination index arithmetical operation step in the eighteenth aspect.

An ultrasound diagnostic method of a twentieth aspect of the present invention includes: an arithmetical operation step of setting an assumed sound speed in a certain region of interest in a subject, tracing an acoustic ray of ultrasound transmitted from a ultrasound probe to the region of interest, the ultrasound probe including a plurality of ultrasound transducers for transmitting ultrasound to the subject and receiving the ultrasound reflected by the subject to output an ultrasound detection signal, and obtaining received waves reflected at the region of interest and reaching the plurality of ultrasound transducers through the plurality of lattice points set in a shallower region than the region of interest on the basis of the assumed sound speed; a sound speed determination index arithmetical operation step of obtaining a delay from the received waves from the plurality of lattice points to generate

an image in the region of interest on the basis of the delay, and obtaining a sound speed determination index on the basis of the image; and a local sound speed value determination step of making a determination of the local sound speed value in the region of interest on the basis of the sound speed determination index, and repeating the determination of the local sound speed value in order from a lattice point in a shallow region to determine the local sound speed value in the subject.

The ultrasound diagnostic method of a twenty-first aspect of the present invention further includes a lattice point setting step of setting a lattice point on a boundary between regions with a substantially uniform sound speed in the subject, in any one of the fourteenth to twentieth aspects.

The ultrasound diagnostic method of a twenty-second aspect of the present invention further includes an amplitude image generation step of performing at least one of a transmitting focus process and a receiving focus process on the basis of a determination result of the local sound speed value in the subject to generate an amplitude image indicating an amplitude of the received wave with brightness of a point, in any one of the fourteenth to twenty-first aspects.

The ultrasound diagnostic method of a twenty-third aspect of the present invention further includes a display step of displaying the determination result of the local sound speed value on a display device, in any one of the fourteenth to twenty-first aspects.

The ultrasound diagnostic method of a twenty-fourth aspect of the present invention further includes: an amplitude image generation step of generating an amplitude image indicating an amplitude of the received wave with brightness of a point on the basis of the ultrasound detection signal; and a step of displaying the determination result of the local sound speed value on the display device so as to be superimposed on the amplitude image or placed with the amplitude image side by side, in the twenty-third aspects.

The ultrasound diagnostic method of a twenty-fifth aspect of the present invention further includes: an amplitude image generation step of generating an amplitude image indicating an amplitude of the ultrasonic echo with brightness of a point on the basis of the ultrasound detection signal; and a step of displaying the determination result of the local sound speed value on the display device by changing brightness or color of the amplitude image, in the twenty-third aspect.

The ultrasound diagnostic method of a twenty-sixth aspect of the present invention further includes: a display mode switching step of receiving an instruction input from an operator by a display mode switching device to switch a display mode between a first display mode in which the amplitude image is displayed alone and a second display mode in which the determination result of the local sound speed value in the subject is displayed, and switching the display mode, in the twenty-fourth or twenty-fifth aspect.

According to the present invention, the local sound speed value in the subject can be determined with high accuracy using an amplitude image obtained in generation of a B mode image, RF data, or data on the received waves received by the ultrasound transducer elements. The local sound speed value obtained as described above can be used to detect a lesion in the subject with higher accuracy. A configuration exclusively for transmitting ultrasound and a configuration exclusively for receiving ultrasound are not required to be arranged separately, in order to measure the local sound speed value.

BRIEF DESCRIPTION OF THE DRAWINGS

FIG. **1** is a block diagram of an ultrasound diagnostic apparatus according to a first embodiment of the present invention;

FIGS. **2**A and **2**B schematically show an arithmetical operation process of a local sound speed value according to the first embodiment of the present invention;

FIG. **3** is a flowchart showing the arithmetical operation process of the local sound speed value according to the first embodiment of the present invention;

FIG. **4** is a flowchart showing the arithmetical operation process of the local sound speed value according to the first embodiment of the present invention;

FIG. **5** schematically shows an arithmetical operation process of a local sound speed value according to a second embodiment of the present invention;

FIG. **6** is a flowchart showing the arithmetical operation process of the local sound speed value according to the second embodiment of the present invention;

FIG. **7** is a flowchart showing the arithmetical operation process of the local sound speed value according to the second embodiment of the present invention;

FIG. **8** schematically shows an arithmetical operation procedure of a local sound speed value in a subject according to a third embodiment of the present invention;

FIG. **9** is a flowchart showing an arithmetical operation process of the local sound speed value according to the third embodiment of the present invention;

FIG. **10** is a flowchart showing a calculation process of a receiving time of a received wave by acoustic ray tracing according to the third embodiment of the present invention;

FIG. **11** schematically shows an arithmetical operation procedure of a local sound speed value in a subject according to a fourth embodiment of the present invention;

FIG. **12** is a flowchart showing a calculation process of a receiving time of a received wave by acoustic ray tracing according to the fourth embodiment of the present invention;

FIG. **13** is a flowchart showing an arithmetical operation process of the local sound speed value according to a fifth embodiment of the present invention; and

FIGS. **14**A and **14**B schematically show an arithmetical operation process of a local sound speed value.

DETAILED DESCRIPTION OF THE PREFERRED EMBODIMENTS

Now, preferred embodiments of an ultrasound diagnostic apparatus and an ultrasound diagnostic method according to the present invention will be described with reference to the accompanying drawings.

First Embodiment

FIG. **1** is a block diagram of an ultrasound diagnostic apparatus according to a first embodiment of the present invention.

An ultrasound diagnostic apparatus **10** shown in FIG. **1** is an apparatus that transmits an ultrasound beam from an ultrasound probe **300** to a subject OBJ, receives the ultrasound beam (ultrasonic echo) reflected by the subject OBJ, and generates and displays an ultrasound image from a detection signal of the ultrasonic echo.

A CPU (Central Processing Unit) **100** controls each block in the ultrasound diagnostic apparatus **10** according to an operation input from an operation input unit **200**.

The operation input unit **200** is an input device that receives an operation input by an operator, and includes a console **202** and a pointing device **204**. The console **202** includes a keyboard that receives an input of character information (for example, patient information), a display mode switch button for switching a display mode between a mode in which an

amplitude image (B (Brightness) mode image) is displayed alone and a mode in which a determination result of a local sound speed value is displayed, a freeze button for giving instruction to switch between a live mode and a freeze mode, a cine memory reproduction button for giving instruction to reproduce an image based on data stored in a cine memory, and an analysis and measurement button for giving instruction to analyze and measure an ultrasound image. The pointing device **204** is a device that receives an input of designation of a region on a screen of a display unit **104**, for example, a trackball or a mouse. A touch panel may be used as the pointing device **204**.

A storage unit **102** is a storage device that stores a control program for the CPU **100** to control each block in the ultrasound diagnostic apparatus **10**, for example, a hard disk or a semiconductor memory.

The display unit **104** is, for example, a CRT (Cathode Ray Tube) display or a liquid crystal display, and displays an ultrasound image (moving image and still image) and various setting screens.

The ultrasound probe **300** is a probe to be abutted against the subject OBJ for use, and includes a plurality of ultrasound transducers **302** that constitute a one-dimensional or two-dimensional transducer array. The ultrasound transducer **302** transmits an ultrasound beam to the subject OBJ on the basis of a drive signal applied from a transmission circuit **402**, and receives an ultrasonic echo reflected from the subject OBJ to output a detection signal.

The ultrasound transducer **302** includes a transducer including electrodes formed at opposite ends of a piezoelectric material (piezoelectric body). As the piezoelectric body included in the transducer, for example, piezoelectric ceramic such as PZT (Pb (lead) zirconate titanate) or a polymeric piezoelectric element such as PVDF (polyvinylidene difluoride) can be used. When an electric signal is sent to the electrode of the transducer to apply a voltage, the piezoelectric body expands or contracts, and the expansion and contraction of the piezoelectric body causes each transducer to generate ultrasound. For example, when a pulse-like electric signal is sent to the electrode of the transducer, pulse-like ultrasound is generated, and when a continuous wave electric signal is sent to the electrode of the transducer, continuous wave ultrasound is generated. Then, ultrasound generated from each transducer is synthesized to form an ultrasound beam. When each transducer receives ultrasound, the piezoelectric body in each transducer expands and contracts to generate an electric signal. The electric signal generated from each transducer is output to a reception circuit **404** as an ultrasound detection signal.

As the ultrasound transducers **302**, a plurality of kinds of elements of different ultrasound conversion types may be used. For example, the transducer including the piezoelectric body is used as an element that transmits ultrasound, and an optical detection type ultrasound transducer may be used as an element that receives ultrasound. The optical detection type ultrasound transducer converts an ultrasound signal into an optical signal for detection, and is, for example, a Fabry-Perot resonator or a fiber Bragg grating.

Next, an ultrasound diagnosis process in the live mode will be described. The live mode is a mode in which an ultrasound image (moving image) obtained by abutting the ultrasound probe **300** against the subject OBJ to transmit and receive ultrasound is displayed, analyzed and measured.

When the ultrasound probe **300** is abutted against the subject OBJ, and ultrasound diagnosis is started by an instruction input from the operation input unit **200**, the CPU **100** outputs an control signal to a transmission and reception unit **400**, and starts transmitting an ultrasound beam to the subject OBJ and receiving an ultrasonic echo from the subject OBJ. The CPU **100** sets a transmitting direction of the ultrasound beam and a receiving direction of the ultrasonic echo for each ultrasound transducer **302**.

Further, the CPU **100** selects a transmission delay pattern according to the transmitting direction of the ultrasound beam, and selects a reception delay pattern according to the receiving direction of the ultrasonic echo. The transmission delay pattern is pattern data of a delay time provided to a drive signal for forming an ultrasound beam in a desired direction by ultrasound transmitted from the plurality of ultrasound transducers **302**. The reception delay pattern is pattern data of a delay time provided to a detection signal for extracting an ultrasonic echo from a desired direction by ultrasound received by the plurality of ultrasound transducers **302**. The transmission delay pattern and the reception delay pattern are previously stored in the storage unit **102**. The CPU **100** selects a transmission delay pattern and a reception delay pattern from the patterns stored in the storage unit **102**, and outputs a control signal to the transmission and reception unit **400** to perform control to transmit and receive ultrasound according to the selected transmission delay pattern and reception delay pattern.

The transmission circuit **402** generates a drive signal according to a control signal from the CPU **100**, and applies the drive signal to the ultrasound transducer **302**. At this time, the transmission circuit **402** delays the drive signal applied to each ultrasound transducer **302** on the basis of the transmission delay pattern selected by the CPU **100**. The transmission circuit **402** adjusts (delays) timing of applying the drive signal to each ultrasound transducer **302** so that ultrasound transmitted from the plurality of ultrasound transducers **302** forms an ultrasound beam. The timing of applying the drive signal may be adjusted so that ultrasound transmitted at one time from the plurality of ultrasound transducers **302** reaches the entire imaging region of the subject OBJ.

The reception circuit **404** receives and amplifies an ultrasound detection signal output from each ultrasound transducer **302**. As described above, because of different distances between the respective ultrasound transducers **302** and an ultrasound reflection source in the subject OBJ, reflected waves reach the respective ultrasound transducers **302** at different times. The reception circuit **404** includes a delay circuit, and delays each detection signal by an amount corresponding to a difference (delay time) between reaching times of the reflected waves according to a sound speed (hereinafter referred to as an assumed sound speed) set on the basis of the reception delay pattern selected by the CPU **100** or distribution of the sound speed. Then, the reception circuit **404** performs matching addition of the detection signals delayed by the delay time to perform a receiving focus process. When there is a different ultrasound reflection source in a different position from an ultrasound reflection source X_{ROI}, an ultrasound detection signal from the different ultrasound reflection source reaches at a different time. Thus, the addition by an addition circuit of the reception circuit **404** causes phases of ultrasound detection signals from different ultrasound reflection sources to cancel each other out. Thus, the received signal from the ultrasound reflection source X_{ROI} is maximized and comes into focus. The receiving focus process forms an acoustic ray signal (hereinafter referred to as an RF (Radio Frequency) signal) with narrowed focus of an ultrasonic echo.

An A/D converter **406** converts an analog RF signal output from the reception circuit **404** into a digital RF signal (hereinafter referred to as RF data). The RF data includes phase

information of a received wave (carrier wave). The RF data output from the A/D converter **406** is input to a signal processing unit **502** and a cine memory **602**.

The cine memory **602** successively stores the RF data input from the A/D converter **406**. The cine memory **602** stores information on a frame rate (for example, a depth of a reflection position of ultrasound, a density of scanning lines, a parameter indicating a width of field of view) input from the CPU **100** in association with the RF data.

The signal processing unit **502** corrects the RF data in attenuation due to a distance according to a depth of a reflection position of ultrasound by STC (Sensitivity Time gain Control), and then performs an envelope detection process of the RF data to generate a B mode image data (image data indicating an amplitude of an ultrasonic echo with brightness of a point).

The B mode image data generated by the signal processing unit **502** is obtained by a different scanning method from a normal television signal scanning method. Thus, a DSC (Digital Scan Converter) **504** converts (raster conversion) the B mode image data into normal image data (for example, image data by the television signal scanning method (NTSC (National Television System Committee in the United States) method)). An image processing unit **506** performs various necessary image processes (for example, gradation processing) on image data input from the DSC **504**.

An image memory **508** stores image data input from the image processing unit **506**. A D/A converter **510** converts image data read from the image memory **508** into an analog image signal, and outputs the signal to the display unit **104**. Thus, the ultrasound image (moving image) taken by the ultrasound probe **300** is displayed on the display unit **104**.

In the embodiment, the detection signal subjected to the receiving focus process in the reception circuit **404** is the RF signal, but a detection signal that is not subjected to the receiving focus process may be an RF signal. In this case, the plurality of ultrasound detection signals output from the plurality of ultrasound transducers **302** are amplified by the reception circuit **404**, and the amplified detection signals, that is, the RF signals are A/D converted by the A/D converter **406** to generate RF data. Then, the RF data is supplied to the signal processing unit **502**, and stored in the cine memory **602**. The receiving focus process is performed by the signal processing unit **502** in digital form.

Next, a cine memory reproduction mode will be described. The cine memory reproduction mode is a mode in which an ultrasound diagnosis image is displayed, analyzed and measured on the basis of the RF data stored in the cine memory **602**.

When the cine memory reproduction button on the console **202** is pushed, the CPU **100** switches an operation mode of the ultrasound diagnostic apparatus **10** to the cine memory reproduction mode. In the cine memory reproduction mode, the CPU **100** instructs a cine memory reproduction unit **604** to reproduce RF data designated by an operation input by an operator. The cine memory reproduction unit **604** reads the RF data from the cine memory **602** according to the instruction from the CPU **100**, and transmits the read RF data to the signal processing unit **502** in the image signal generation unit **500**. The RF data transmitted from the cine memory **602** is subjected to predetermined processes (the same processes as in the live mode) by the signal processing unit **502**, the DSC **504**, and the image processing unit **506** and converted into image data, and then output via an image memory **508** and the D/A converter **510** to the display unit **104**. Thus, the ultrasound image (moving image or still image) based on the RF data stored in the cine memory **602** is displayed on the display unit **104**.

When the freeze button on the console **202** is pushed while the ultrasound image (moving image) is displayed in the live mode or the cine memory reproduction mode, the ultrasound image displayed when the freeze button is pushed is displayed as a still image on the display unit **104**. This allows the operator to display and observe a still image of a region of interest (ROI).

When the measurement button on the console **202** is pushed, analysis and measurement designated by the operation input by the operator are performed. When the measurement button is pushed in each operation mode, a data analysis and measurement unit **106** obtains RF data before image processing from the A/D converter **406** or the cine memory **602**, and uses the RF data to perform analysis and measurement designated by the operator (for example, distortion analysis of a tissue part (diagnosis of hardness), measurement of blood flow, measurement of movement of the tissue part, or measurement of IMT (Intima-Media Thickness) value). Results of analysis and measurement by the data analysis and measurement unit **106** are output to the DSC **504** in the image signal generation unit **500**. The DSC **504** inserts the results of the analysis and measurement by the data analysis and measurement unit **106** into image data of the ultrasound image and outputs the data to the display unit **104**. Thus, the ultrasound image and the results of the analysis and measurement are displayed on the display unit **104**.

When the display mode switching button is pushed, the display mode is switched between a mode in which the B mode image is displayed alone, a mode in which the determination result of the local sound speed value is displayed so as to be superimposed on the B mode image (for example, display with changing color or brightness according to the local sound speed value or display with a line connecting points with the same local sound speed value), and a mode in which the B mode image and the image of the determination result of the local sound speed value are placed side by side. This allows the operator to observe the determination result of the local sound speed value to find, for example, a lesion.

A B mode image obtained by performing at least one of the transmitting focus process and the receiving focus process may be displayed on the display unit **104** on the basis of the determination result of the local sound speed value.

[Arithmetical Operation Process of Local Sound Speed Value]

FIGS. **2**A and **2**B schematically show an arithmetical operation process of the local sound speed value according to the first embodiment of the present invention.

As shown in FIG. **2**B, a representative lattice point in the region of interest ROI in the subject OBJ is determined as X_{ROI}, and lattice points arranged at regular intervals in X direction in a position shallower than the lattice point X_{ROI} (that is, closer to the ultrasound transducer **302**) are determined as **A1**, **A2**, . . . , and it is assumed that a sound speed at least between the lattice point X_{ROI} and each of the lattice points **A1**, **A2**, . . . is constant.

In the embodiment, T and delay times ΔT of received waves (W_{A1}, W_{A2}, . . . , respectively) from the lattice points **A1**, **A2**, . . . are regarded as known, and a local sound speed value at the lattice point X_{ROI} is obtained from a positional relationship between the lattice point X_{ROI} and the lattice points **A1**, **A2**, ... Specifically, matching is used between an assumed received wave W_X from the lattice point X_{ROI} and a

received wave W_{SUM} of an assumed synthesis of the received waves from the lattice points A1, A2, . . . by Huygens' principle.

A range (a region where the lattice points A1, A2, . . . are arranged) and the number of lattice points A1, A2, . . . used in an arithmetical operation for obtaining the local sound speed value at the lattice point X_{ROI} are previously determined. A wide range of lattice points used for the arithmetical operation of the local sound speed value causes a large error in the local sound speed value, and a narrow range causes a large error from the assumed received wave, and thus the range of lattice points is determined by a trade-off therebetween.

The interval between the lattice points A1, A2, . . . in the X direction is determined by a trade-off between resolution and processing time. The interval between the lattice points A1, A2, . . . in the X direction is, for example, nearly 1 mm to 1 cm.

A narrow interval between the lattice points A1, A2, . . . and X_{ROI} in the Y direction causes a large error in error calculation, and a wide interval between the lattice points A1, A2, . . . and X_{ROI} in the Y direction causes a large error in the local sound speed value. The interval between the lattice points A1, A2, . . . and X_{ROI} in the Y direction is determined on the basis of setting of image resolution of an ultrasound image. The interval between the lattice points A1, A2, . . . and X_{ROI} in the Y direction is, for example, nearly 1 cm.

The wide interval between the lattice points A1, A2, . . . makes difficult an arithmetical operation (described later) of a resultant wave, and thus fine lattice points may be generated by interpolation.

Now, the arithmetical operation process of the local sound speed value according to the embodiment will be described with reference to flowcharts in FIGS. **3** and **4**.

In the embodiment, first, as shown in FIG. **3**, optimum sound speed values at all lattice points set in the subject OBJ are previously determined (step S**10**). The optimum sound speed value is a sound speed value with the highest contrast and sharpness of an image, and does not always match the actual local sound speed value at each lattice. As a determination method of the optimum sound speed value in step S**10**, for example, a method of determining an optimum sound speed value from contrast of the image, a space frequency of the image in a scanning direction, and dispersion of the space frequency (for example, Japanese Patent Application Laid-Open No. 8-317926) may be applied.

Next, a local sound speed value at each lattice point is determined on the basis of the optimum sound speed value at each lattice point (step S**12**).

A method of determining the local sound speed value on the basis of the optimum sound speed value will be described. First, as shown in FIG. **4**, a waveform of an assumed received wave W_X with the lattice point X_{ROI} as a reflection point is calculated on the basis of the optimum sound speed value at the lattice point X_{ROI} (step S**20**).

Then, an initial value of an assumed sound speed at the lattice point X_{ROI} is set (step S**22**). Then, the assumed sound speed is changed by one step (step S**24**), and an assumed resultant received wave W_{SUM} is calculated (step S**26**). When the local sound speed value at the lattice point X_{ROI} is assumed as V, times that elapses after the ultrasound propagating from the lattice point X_{ROI} before reaching the lattice points A1, A2, . . . are X_{ROI}A1/V, X_{ROI}A2/V, . . . respectively. The X_{ROI}A1, X_{ROI}A2, . . . are distances between the lattice points A1, A2, . . . , respectively, and the lattice point X_{ROI}. The optimum sound speed values at the lattice points A1, A2, . . . are known by step S**10**, and thus received waves from the lattice points A1, A2, . . . can be previously obtained. Thus, reflected waves (ultrasonic echo) generated with delays X_{ROI}A1/V, X_{ROI}A2/V, . . . from the lattice points A1, A2, . . . can be synthesized to obtain the assumed resultant received wave W_{SUM}.

Actually, the above described processing is performed on element data (RF signal), and thus times (T1, T2, . . . respectively) that elapses after the ultrasound propagating from the lattice point X_{ROI} before reaching the lattice points A1, A2, . . . are expressed by the following expression (2):

$$T1=\sqrt{(X_{A1}/V)^2+(\Delta t/2)^2},$$

$$T2=\sqrt{(X_{A2}/V)^2+(\Delta t/2)^2}, \ldots$$

$$T3=\ldots \quad (2)$$

where X_{A1}, X_{A2}, . . . are distances between the lattice points A1, A2, . . . and the lattice point X in the scanning direction (X direction) respectively, and Δt is a time interval of the lattice points in the Y direction.

Received waves from the lattice points A1, A2, . . . can be synthesized with a delay obtained by adding, to T1, T2, . . . , a time (Δt/2) that elapses before the ultrasound arriving at the lattice point X_{ROI} from a lattice point An on the same acoustic ray as the lattice point X_{ROI} (for example, on the same straight line which extends to the ultrasound probe **300** from the lattice point X_{ROI}) to obtain the assumed resultant received wave W_{SUM}.

When the lattice points are set at regular intervals (Δt) on a time axis in the Y direction, the lattice points are not always arranged at regular intervals on a space. Thus, when the time that elapses before the ultrasound arriving at each lattice point is calculated, corrected Δt/2 may replace Δt/2 in the expression (2). The corrected Δt/2 is, for example, a value obtained by adding or subtracting, to or from Δt/2, a value obtained by dividing by V a difference in a depth (distance in the Y direction) of A1, A2, . . . from the lattice point An on the same acoustic ray as the lattice point X_{ROI}. The depth of each of the lattice points A1, A2, . . . can be obtained by a known local sound speed at a shallower lattice point than the lattice points A1, A2, ...

The assumed resultant received wave W_{SUM} is calculated by actually superimposing predetermined pulse waves (W_{A1}, W_{A2}, . . . respectively) generated from the lattice points A1, A2, . . . with the delays X_{ROI}A1/V, X_{ROI}A2/V, . . . respectively.

Next, an error (delta) between the assumed received wave W_X and the assumed resultant received wave W_{SUM} is calculated (step S**28**). The error between the assumed received wave W_X and the assumed resultant received wave W_{SUM} can be calculated by taking cross-correlation between the waves; delaying the assumed received wave W_X by a delay obtained from the assumed resultant received wave W_{SUM} to perform phase matching addition of the waves; or delaying the assumed resultant received wave W_{SUM} by a delay obtained from the assumed received wave W_X to perform phase matching addition of the waves. To obtain the delay from the assumed received wave W_X, a time that elapses after the ultrasound propagating at the sound speed V before reaching each element may be regarded as the delay when the lattice point X_{ROI} is a reflection point. To obtain the delay from the assumed resultant received wave W_{SUM}, an equiphase line is extracted from a phase difference between resultant received waves of adjacent elements, and the equiphase line may be regarded as a delay, or a phase difference between maximum (peak) positions of the resultant received waves from the elements may be simply regarded as a delay. A correlation peak position of the resultant received wave from the elements may be regarded as a delay. The error in phase match-

ing addition is obtained from peak to peak of a waveform after matching addition, or a maximum value of an amplitude after envelope detection.

Then, steps **S24** to **S30** are repeated, and when arithmetical operations at all assumed sound speed values are finished (Yes in step **S30**), the local sound speed value at the lattice point X_{ROI} is determined (step **S32**). With strict application of Huygens' principle, the waveform of the assumed resultant received wave W_{SUM} obtained in step **S26** is equal to the waveform of the assumed received wave (reflected wave) W_X when the local sound speed value at the lattice point X_{ROI} is assumed as V. In step **S32**, a value of an assumed sound speed at which the error between the assumed received wave W_X and the assumed resultant received wave W_{SUM} is at minimum is determined as a local sound speed value at the lattice point X_{ROI}.

According to the embodiment, the local sound speed value in the subject can be determined with high accuracy by using an amplitude image obtained by generating a B mode image, RF data, or data of the received waves received by the ultrasound transducer elements. The local sound speed value obtained as described above can be used to detect a lesion in the subject with higher accuracy. According to the embodiment, a configuration exclusively for transmitting ultrasound and a configuration exclusively for receiving ultrasound are not required to be arranged separately, in order to measure the local sound speed value.

Instead of the above described method (calculation of the waveform of the assumed resultant received wave, calculation of the error (delta) in waveform between the assumed resultant received wave and the assumed received waveform, and determination of the sound speed), a table may be used with an optimum sound speed at the lattice point X_{ROI} and optimum sound speed values at the lattice points **A1**, **A2**, . . . as inputs and a sound speed value at the lattice point X_{ROI} as an output.

Also, multiple times of determination of the local sound speed value may be performed using lattice points with a different interval and in a different range (region).

Second Embodiment

Next, a second embodiment of the present invention will be described. In the descriptions below, descriptions relating to the same configurations as in the first embodiment will be omitted.

As shown in FIGS. **5** and **6**, in the embodiment, local sound speed values are determined in order from a lattice point in a shallow layer (in order of $\mathbf{A1}_0, \mathbf{A2}_0, \ldots, \mathbf{A1}_1, \mathbf{A2}_1, \ldots, \mathbf{A1}_N, \mathbf{A2}_N, \ldots$) to determine a local sound speed value at a region of interest (lattice point X_{ROI}). It is assumed that a local sound speed value is constant from lattice points ($\mathbf{A1}_N, \mathbf{A2}_N, \ldots$) in a certain depth to lattice points ($\mathbf{A1}_{N-1}, \mathbf{A2}_{N-1}, \ldots$) in a one step shallower layer. It is also assumed that a local sound speed value is constant from lattice points ($\mathbf{A1}_0, \mathbf{A2}_0, \ldots$) in the shallowest layer to an ultrasound probe **300**

Now, an arithmetical operation process of a local sound speed value according to the embodiment will be described in detail with reference to a flowchart in FIG. **7**.

In the embodiment, the arithmetical operation process of the local sound speed value shown in FIG. **7** is performed in order from a lattice point in a shallow layer. In the arithmetical operation of the local sound speed value, to determine a sound speed value of a lattice point in a certain depth, a received wave from a lattice point in a shallower depth than the certain depth is required. Thus, to determine local sound speed values at lattice points ($\mathbf{A1}_N, \mathbf{A2}_N, \ldots$) in a depth N, received waves from all lattice points ($\mathbf{A1}_{N-1}, \mathbf{A2}_{N-1}, \ldots$) in a depth (N−1) are held in a memory (storage unit **102**). After the processing of all lattice points in the depth N is finished, the received waves in the depth (N−1) are abandoned, and received waves from all lattice points in the depth N are held instead.

The received waves and the local sound speed values at the lattice points ($\mathbf{A1}_0, \mathbf{A2}_0, \ldots$) in the shallowest layer can be obtained by a simple method. The received waves and the local sound speed values at the lattice points ($\mathbf{A1}_1, \mathbf{A2}_1, \ldots$) in depth "1" are determined by the arithmetical operation process by using the received waves and the local sound speed values at the lattice points ($\mathbf{A1}_0, \mathbf{A2}_0, \ldots$) in depth "0". By repeating the process, the local sound speed values at the lattice points ($\mathbf{A1}_2, \mathbf{A2}_2, \ldots, \mathbf{A1}_N, \mathbf{A2}_N, \ldots$) in depth "2", . . . , "N" and the lattice point X_{ROI} are determined by using the received waves and the local speed values at the lattice points in the shallower depth (i.e. depth "1", . . . , "(N−1)", "N"). In the description below concerning the operation for each depth, the subscripts of the lattice points **A1**, . . . are omitted, and the lattice point which becomes a target of determining the received wave and the local sound speed value in the operation in each depth is represented as X_{ROI}.

A range of lattice points (a region where the lattice points $\mathbf{A1}_0, \mathbf{A2}_0, \ldots, \mathbf{A1}_1, \mathbf{A2}_1, \ldots, \mathbf{A1}_N, \mathbf{A2}_N, \ldots$ are arranged) and an interval between the lattice points in XY directions used in the arithmetical operation of the local sound speed value are previously determined as in the first embodiment. Multiple times of determination of the local sound speed value may be performed using lattice points with a different interval and in a different range.

Next, as shown in FIG. **7**, an initial value of an assumed sound speed at a lattice point X_{ROI} is set (step **S50**). Then, the assumed sound speed is changed by one step (step **S52**), and an assumed resultant received wave W_{SUM} from the lattice point X_{ROI} is calculated from received waves from the lattice points **A1**, **A2**, . . . and a delay obtained from the assumed sound speed (step **S54**).

Then, a delay curve around the lattice point X_{ROI} is set from the assumed resultant received wave W_{SUM} (step **S56**). As a method of setting a delay curve from the assumed resultant received wave W_{SUM}, for example, a method of extracting an equiphase line of the assumed resultant received wave, a method of extracting a maximum amplitude position, or a method of extracting a correlation peak position may be applied.

The received waves at the lattice points **A1**, **A2**, . . . with the delay may be set as delay curves without calculating the assumed resultant received wave W_{SUM} to perform matching addition for all delay curves.

For signals of the lattice points **A1**, **A2**, . . . obtained by matching addition with the received waves at the lattice points **A1**, **A2**, . . . set as the delay curves, further matching addition may be performed according to delay based on distances between the lattice point X_{ROI} and the lattice points **A1**, **A2**, ... In the embodiment, the lattice points **A1**, **A2**, . . . are regarded as assumed elements, a received signal at each assumed element is obtained as a result of the matching addition of the received wave from each assumed element. Then, assuming that a reflected wave from the lattice point X_{ROI} to each assumed element is a wave propagating an uniform sound speed medium, a receiving time and a delay of the reflected wave are obtained to determine a local sound speed value at the lattice point X_{ROI}.

Then, an ultrasound image (B mode image) around the lattice point X_{ROI} is generated on the basis of the delay curve (step **S58**), and a sound speed determination index is calcu-

lated from the image around the lattice point X_{ROI} (step S60). The sound speed determination index is an index for determining a sound speed obtained on the basis of at least one of contrast of the image, a space frequency of the image in a scanning direction, and dispersion of the space frequency. Calculation of the sound speed determination index may be performed after image generation of all assumed sound speeds (after step S62).

Then, steps S52 to S62 are repeated, and when arithmetical operations at all assumed sound speed values are finished (Yes in step S62), the local sound speed value at the lattice point X_{ROI} is determined on the basis of the sound speed determination index (step S64).

According to the embodiment, the local sound speed value is determined in order from the shallow layer in the subject OBJ, thereby allowing the local sound speed value in the subject to be determined with high accuracy.

Third Embodiment

Next, a third embodiment of the present invention will be described. In the descriptions below, descriptions relating to the same configurations as in the first embodiment will be omitted.

FIG. **8** schematically shows an arithmetical operation procedure of a local sound speed value in a subject according to a third embodiment of the present invention.

In the descriptions below, a direction parallel to an element surface S2 on which an ultrasound transducer **302** is placed is an X direction, and a direction perpendicular to the X direction (a depth direction of a subject OBJ) is a Y direction.

As shown in FIG. **8**, a representative lattice point in a region of interest ROI in a region A in the subject OBJ is determined as X_{ROI}, and lattice points arranged at regular intervals in the X direction in a position shallower than the lattice point X_{ROI} (that is, closer to the ultrasound transducer **302**) in the subject OBJ are determined as A1, A2, . . . , An, ... The region A is a region between a line (hereinafter referred to as a boundary surface S1) connecting the lattice points A1, A2, . . . , An, . . . and the lattice point X_{ROI} in the subject OBJ, and a region B is a region between the boundary surface S1 and the element surface S2 of the ultrasound probe **300**. It is assumed that sound speeds in the region A and the region B are constant respectively.

In the embodiment, when local optimum sound speeds (environmental sound speeds) in the regions from the lattice points A1, A2, . . . to the element surface S2 of the ultrasound probe **300** are substantially the same, received waves from the lattice points A1, A2, . . . are the same each other, the received waves are considered to be approximately the same, or the received waves gently change, as shown in FIG. **8**, on the basis of a sound speed (assumed sound speed) in the region A between the lattice point X_{ROI} and the lattice points A1, A2, . . . and an environmental sound speed in the region B, an acoustic ray refracted at the boundary surface between the regions A and B is traced by Snell's law to obtain a receiving time at each element, instead that the received waves from the lattice points A1, A2, . . . are synthesized to generate an assumed received wave and obtain a receiving time at each element.

FIG. **9** is a flowchart showing an arithmetical operation process of the local sound speed value in the subject according to the third embodiment of the present invention.

First, an optimum sound speed value (environmental sound speed) V_B in the region B is calculated on the basis of received waves received from the lattice points A1, A2, . . . , An, . . . set in the subject OBJ (step S70). Then, a time (receiving time) T_B for ultrasound transmitted in a +Y direction from the ultrasound transducer **302** to be reflected in a −Y direction at the boundary surface S1 between the regions A and B and return to the ultrasound transducer **302** is measured, and a depth D_B of the region B is calculated based on the environmental sound speed V_B and the receiving time T_B by the following expression (3):

$$D_B = T_B \times V_B / 2 \tag{3}$$

The optimum sound speed value is a sound speed value with the highest contrast and sharpness of an image, and does not always match the actual local sound speed value at each lattice. As a method of determining an optimum sound speed value in step S70, for example, a method of determination from contrast of the image, a space frequency of the image in a scanning direction, and dispersion of the space frequency (for example, Japanese Patent Application Laid-Open No. 8-317926) may be applied.

Next, an initial value V_A of a local sound speed value (assumed sound speed) in the region A is set (step S72). Then, the assumed sound speed V_A is changed by one step (step S74). Then, a time (receiving time) T_A for ultrasound transmitted in the +Y direction from a lattice point An in line with the lattice point X_{ROI} in the Y direction (on the same X coordinate) to be reflected in the −Y direction at the lattice point X_{ROI} and return to the lattice point An is measured, and a depth D_A of the region A is calculated based on the assumed sound speed V_A and the receiving time T_A by the following expression (4):

$$D_A = T_A \times V_A / 2 \tag{4}$$

Then, on the basis of the assumed sound speed V_A and the environmental sound speed V_B, acoustic ray tracing of the received wave reflected at the lattice point X_{ROI} and reaching the ultrasound transducer **302** is performed, and a receiving time of the received wave is calculated (step S76). Processing of the acoustic ray tracing in step S76 will be described later.

Then, in step S70, an error (delta) between a received wave W1 received from the lattice points A1, A2, . . . , An, . . . and a received wave W2 calculated by the acoustic ray tracing in step S76 is calculated (step S78). In step S78, the error between the received waves W1 and W2 can be calculated by taking cross-correlation between the waves; delaying the received wave W1 received from the lattice points A1, A2, . . . , An, . . . by a delay obtained from the received wave W2 calculated by the acoustic ray tracing to perform phase matching addition of the waves; or, conversely, by delaying the received wave W2 calculated by the acoustic ray tracing by the delay obtained from the received wave W1 received from the lattice points A1, A2, . . . , An, . . . to perform phase matching addition of the waves. To obtain the delay from the received wave W1 received from the lattice points A1, A2, . . . , An, . . . , and a time that elapses after the ultrasound propagating at the sound speed V before reaching each element may be regarded as a delay when the lattice point X_{ROI} is regarded as a reflection point. To obtain the delay from the received wave W2 calculated by the acoustic ray tracing, an equiphase line is extracted from a phase difference between resultant received waves obtained by synthesizing received waves of adjacent elements, and the equiphase line may be regarded as a delay; or a phase difference between maximum (peak) positions of the resultant received waves of the elements may be regarded as a delay. A correlation peak position of the resultant received wave from the elements may be regarded as a delay. The error in phase matching addition is

obtained from peak to peak of a waveform after matching addition or a maximum value of an amplitude after envelope detection.

Then, steps **S74** to **S80** are repeated, and when arithmetical operations at all assumed sound speed values are finished (Yes in step **S80**), a local sound speed value at the lattice point X_{ROI} is determined (step **S82**). In step **S82**, a value of the assumed sound speed V_A at which a difference in receiving time (absolute value of difference) between the received wave **W1** received from the lattice points **A1**, **A2**, . . . , An, . . . in step **S70** and the received wave **W2** calculated by the acoustic ray tracing in step **S76** is at minimum is determined as a local sound speed value at the lattice point X_{ROI}.

Now, a calculation process of the receiving time of the received wave by the acoustic ray tracing in step **S76** will be described with reference to a flowchart in FIG. **10**.

First, an initial value of an emission angle Θ of ultrasound from the lattice point X_{ROI} is set, and a parameter n is set to n=0 (step **S90**). Then, the emission angle Θ is changed by one step and updated to Θ=Θ+ΔΘ (ΔΘ: predetermined angle), and the parameter n is updated to n=n+1 (step **S92**).

Then, a propagation time T_{AR} that elapses after ultrasound emitted from the lattice point X_{ROI} at the updated emission angle Θ before reaching the boundary surface **S1** between the region A and the region B, and a reaching position X' of the ultrasound on the boundary surface **S1** is calculated (step **S94**).

When an X coordinate of the lattice point X_{ROI} is X_0, and an X coordinate of a point X' is X', a distance X_A in the X direction between the lattice point X_{ROI} and the point X' is obtained by the following expression (5):

$$X_A=|X'-X_0|=DA\times\tan\Theta \tag{5}$$

The propagation time T_{AR} that elapses after the ultrasound emitted from the lattice point X_{ROI} before reaching the point X' on the boundary surface **S1** is obtained by the following expression (6).

$$T_{AR}=D_A/V_A/\cos\Theta \tag{6}$$

Then, an emission angle Θ' when the ultrasound emitted from the lattice point X_{ROI} at the emission angle Θ and reaching the point X' on the boundary surface **S1** is emitted from the point X' to the region B is calculated according to Snell's law. Then, an ultrasound propagation time T_{BR} that elapses after the ultrasound emitted from the point X' at the emission angle Θ' before reaching the element surface **S2** of the ultrasound probe **300**, and a reaching position X" of the ultrasound on the element surface **S2** are calculated (step **S96**).

The emission angle Θ' from the point X' is obtained by the following expression (7):

$$\Theta'=\arcsin(V_B\times\sin\Theta/V_A) \tag{7}$$

When an X coordinate of a point X" is X", a distance X_B in the X direction between the point X' and the point X" is obtained by the following expression (8):

$$X_B=|X''-X'|=D_B\times\tan\Theta' \tag{8}$$

The propagation time T_{BR} that elapses after the ultrasound emitted from the point X' before reaching the point X" on the boundary surface **S2** is obtained by the following expression (9):

$$T_{BR}=D_B/V_B/\cos\Theta' \tag{9}$$

Then, a time T_{SUM} (=T_{AT}+T_{BT}+T_{AR}+T_{BR}) that elapses after the ultrasound emitted from the element surface **S2** to be reflected at the lattice point X_{ROI} before returning to the element surface **S2** is calculated, and stored as n-th receiving time data Dn with the reaching position X" of the ultrasound (step **S98**).

T_{AT} and T_{BT} are transmission times for the ultrasound transmitted in the +Y direction from the ultrasound transducer **302** to propagate through the regions A and B, respectively. The transmission times T_{AT} and T_{BT} are obtained by the following expressions (10) and (11):

$$T_{AT}=T_A/2, \tag{10}$$

$$T_{BT}=T_B/2, \tag{11}$$

Then, steps **S92** to **S100** are repeated, and arithmetical operations at all emission angles Θ (for example, angles in a range receivable by the element surface **S2** of the ultrasound probe **300**, |Θ|<90°) are performed (step **S100**).

Then, by the processes from the steps **S90** to **S100**, among receiving time data D_n (n=1, 2, . . .) obtained at each emission angle Θ, receiving time data D_n, with the ultrasound reaching position (receiving position) X" being closest to the position of the element (ultrasound transducer **302**) on the element surface **S2** (for example, with an absolute value of a difference between the X coordinate of the point X" and the X coordinate of the closest element being a predetermined value or less) is extracted. Then, the extracted receiving time data D_n is stored in the memory (storage unit **102**) as receiving time data of the element (the ultrasound transducer **302** closest to the reaching position X" of the received wave) (step **S102**).

In the processing shown in FIG. **9**, the receiving time data stored in step **S102** is used to determine the local sound speed value in the region A (lattice point X_{ROI}).

In the embodiment, by superimposing the received waves from the lattice points, and the propagation time T_{SUM} of the ultrasound is calculated for only a path where the received waves strengthen each other except a path where the received waves cancel each other. Specifically, acoustic ray tracing of the ultrasound reflected at the lattice point X_{ROI} in the region of interest ROI in the subject OBJ is performed, and only the receiving time of the received wave directly reaching each element of the ultrasound probe **300** (or reaching the position closest to each element) is used to determine the local sound speed value at the lattice point X_{ROI}. According to the embodiment, the local sound speed value at the lattice point X_{ROI} in the subject OBJ can be calculated in fewer processes with accuracy.

Fourth Embodiment

Next, a fourth embodiment of the present invention will be described. In the descriptions below, descriptions relating to the same configurations as in the first embodiment will be omitted.

In the embodiment, in the acoustic ray tracing in step **S76** in FIG. **9**, a time (receiving time) that elapses after the ultrasound transmitted from the ultrasound probe **300** to be reflected at the lattice point X_{ROI} before reaching the element surface **S2** of the ultrasound probe **300** is calculated for all elements C_n (n=1, 2, . . .) on the element surface **S2**.

FIG. **11** schematically shows an arithmetical operation procedure of a local sound speed value in a subject according to the fourth embodiment of the present invention.

In the embodiment, first, as shown in FIG. **11**, a linear acoustic ray L connecting a lattice point X_{ROI} in a region of interest ROI and each element C_n (n=1, 2, . . .) of an ultrasound probe **300** is assumed, and a propagation time T_R for the ultrasound to reach the element C_n along the acoustic ray L is calculated.

Then, an intersection point X' of the acoustic ray L and a boundary surface S1 is moved in ±X directions by a predetermined amount ΔX to set acoustic rays (L(+) and L(−) respectively), and propagation times T_{R+} and T_{R-} for the ultrasound to reach the element C_n along the acoustic rays L(+) and L(−) are calculated.

Then, the propagation time T_R and the propagation times T_{R+} and T_{R-} are compared to determine a movement direction of the point X' for reducing the propagation time T_R of the ultrasound.

Then, the same arithmetical operation is repeated for the acoustic ray (L(+) or L(−)) obtained by moving the point X' in a direction of reducing the propagation time T_R to specify an acoustic ray of ultrasound from the lattice point X_{ROI} to each element C_n (n=1, 2, . . .) of the ultrasound probe **300**. Then, a receiving time T_{SUM} for the ultrasound transmitted in the +Y direction from the ultrasound probe **300** to reach each element C_n (n=1, 2, . . .) along the acoustic ray specified by the above described process is calculated.

As described above, in the embodiment, acoustic rays for all elements C_n (n=1, 2, . . .) of the ultrasound probe **300** can be obtained to allow the local sound speed value to be determined with higher accuracy.

Now, an acoustic ray tracing process according to the fourth embodiment of the present invention will be described with reference to a flowchart in FIG. **12**.

First, an element position C_n for an arithmetical operation is set to C_0 (step S**110**). Then, the element position C_n for the arithmetical operation is updated to C_{n+1} (step S**112**).

Then, a linear acoustic ray L from the lattice point X_{ROI} to the element C_n of the ultrasound probe **300** is set. Then, a propagation time T_R for ultrasound output from the lattice point X_{ROI} to reach the element surface S2 along the acoustic ray L is calculated (step S**114**).

When an X coordinate of the lattice point X_{ROI} is X_0, an X coordinate of the element C_n is X_{Cn}, and an X coordinate of the intersection point X' of the boundary surface S1 between the regions A and B and the acoustic ray L is X', a distance X_A in the X direction between the lattice point X_{ROI} and the point X', and a distance X_B in the X direction between the point X' and the element C_n is obtained by the following expressions (12) and (13).

$$X_A=|X'-X_0|=|X_{Cn}-X_0|\times D_A/(D_A+D_B) \tag{12}$$

$$X_B=|X_{Cn}-X'|=|X_{Cn}-X_0|\times D_B/(D_A+D_B) \tag{13}$$

The propagation time T_R is obtained by the following expression (14):

$$T_R=\sqrt{X_A^2+D_A^2}/V_A+\sqrt{X_B^2+D_B^2}/V_B \tag{14}$$

Next, a point X'(+) shifted in the +X direction from the point X' by a predetermined amount ΔX, and a point X'(−) shifted in the −X direction from the point X' by the predetermined amount ΔX are set. A propagation time T_{R+} for ultrasound from the lattice point X_{ROI} to reach the element C_n along the acoustic ray L(+) from the lattice point X_{ROI} through the point X'(+) to the element C_n, and a propagation time T_{R-} for ultrasound from the lattice point X_{ROI} to reach the element C_n along the acoustic ray L(−) from the lattice point X_{ROI} through the point X'(−) to the element C_n are calculated.

The propagation time T_{R+} is obtained by assigning $X_A=X_A+\Delta X$ and $X_B=X_B-\Delta X$ to the expression (14). The propagation time T_{R-} is obtained by assigning $X_A=X_A-\Delta X$ and $X_B=X_B+\Delta X$ to the expression (14).

Then, the propagation time T_R and the propagation times T_{R+} and T_{R-} calculated as described above are compared to determine a movement direction of the point X' for reducing the propagation time T_R (step S**116**). In step S**116**, when $T_{R-}\geq T_R>T_{R+}$, the movement direction of the point X' is set in the +X direction. When $T_{R-}<T_R\leq T_{R+}$, the movement direction of the point X' is set in the −X direction.

When movements of the point X' in either of the ±X directions do not reduce the propagation time T_R (that is, when $T_R\leq T_{R-}$ and $T_R\leq T_{R+}$) (Yes in step S**118**), a propagation time T_{SUM} for the ultrasound transmitted from the element surface S**2** of the ultrasound probe **300** to be reflected at the lattice point X_{ROI} to reach the element C_n along the acoustic ray L is calculated, and stored as receiving time data of the element C_n in the memory (storage unit **102**) (step S**126**).

In the case of No in step S**118**, the point X' is shifted by the predetermined amount ΔX in a direction determined to reduce the propagation time T_R (hereinafter referred to as a reducing direction) (step S**120**). Also, a propagation time (specifically, the smaller one of T_{R-} and T_{R+} in step S**116**) for the ultrasound emitted from the lattice point X_{ROI} to reach the element C_n along the acoustic ray obtained by connecting the point X' shifted in step S**120** and the lattice point X_{ROI} and the element C_n is held as a propagation time T_R.

Then, an acoustic ray L(**2**) is set obtained by connecting a point X'(**2**) further shifted from the point X' by ΔX in the reducing direction and the lattice point X_{ROI} and the element C_n. Then, a propagation time T_R' for the ultrasound emitted from the lattice point X_{ROI} to reach the element C_n along the acoustic ray L(**2**) is calculated (step S**122**). In the example shown in FIG. **8**, the +X direction is assumed as the reducing direction.

Then, the propagation time T_R' and the propagation time T_R held in step S**120** are compared (step S**124**). When $T_R'<T_R$ (Yes in step S**124**), the process returns to step S**120**.

When $T_R'\geq T_R$ (No in step S**124**), a time T_{SUM} for the ultrasound transmitted from the ultrasound probe **300** to be reflected at the lattice point X_{ROI} to reach the element C_n along the acoustic ray set in step S**120** is calculated, and stored as receiving time data of the element C_n in the memory (storage unit **102**) (step S**126**).

As the processes in steps S**112** to S**128** are repeated, and the arithmetical operations for all the elements C_n (n=1, 2, . . .) on the ultrasound probe **300** are performed.

A position of a reaching position X_C on the element surface S**2** when the point X' is moved is calculated, and X' and X_C closest to an element position to be obtained may be used.

Fifth Embodiment

Next, a fifth embodiment of the present invention will be described. In the descriptions below, descriptions relating to the same configurations as in the first embodiment will be omitted.

In the embodiment, the receiving time data obtained by the method shown in FIG. **10** or **12** is used as a delay curve, and an arithmetical operation process of a local sound speed value is performed in order from a lattice point in a shallow layer to obtain a local sound speed value in a desired region of interest in a subject OBJ (see FIG. **5**).

FIG. **13** is a flowchart showing the arithmetical operation process of the local sound speed value in the subject according to the fifth embodiment of the present invention.

In the embodiment, the arithmetical operation process of the local sound speed value is performed in order from the lattice point in the shallow layer. In the arithmetical operation of the local sound speed value, to determine a local sound speed value at a lattice point X_{ROI}, a received wave from a lattice point in a shallower depth than the lattice point X_{ROI} is

required. Thus, in order to determine local sound speed values at lattice points ($A1_N$, $A2_N$, . . .) in a depth N, received waves from all lattice points ($A1_{N-1}$, $A2_{N-1}$ . . .) in a depth (N−1) are held in a memory (storage unit **102**). After the processing of all lattice points in the depth N is finished, the received waves in the depth (N−1) are abandoned, and received waves from all lattice points in the depth N are held instead.

Optimum sound speed values (environmental sound speeds) at lattice points $A1_0$, $A2_0$, . . . in the shallowest layer are obtained on the basis of received waves received from the lattice points $A1_0$, $A2_0$, . . . set in the subject OBJ.

A range of lattice points (a region where the lattice points $A1_0, A2_0, \ldots, A1_1, A2_1, \ldots, A1_N, A2_N, \ldots$ are arranged) and an interval between the lattice points in XY directions used in the arithmetical operation of the local sound speed value are previously determined as in the first embodiment. Multiple times of determination of the local sound speed value may be performed using lattice points with a different interval and in a different range.

Next, as shown in FIG. **13**, an initial value V_A of an assumed sound speed at the lattice point X_{ROI} is set (step S**130**). Then, the assumed sound speed is changed by one step (step S**132**), and on the basis of the assumed sound speed V_A and the environmental sound speed (that is, the environmental sound speed in the shallowest layer) V_B, acoustic ray tracing of a received wave reflected at the lattice point X_{ROI} and reaching the ultrasound transducer **302** is performed to calculate the a receiving time of the received wave (step S**134**). The acoustic ray tracing process in step S**134** is the same as the embodiment shown in FIG. **10** or **12**.

A delay curve around the lattice point X_{ROI} is set from the receiving time of the received wave obtained in step S**134** (step S**136**).

Then, an ultrasound image (B mode image) around the lattice point X_{ROI} is generated on the basis of the delay curve (step S**138**), and a sound speed determination index is calculated from the image around the lattice point X_{ROI} (step S**140**). The sound speed determination index is an index for determining a sound speed obtained on the basis of at least one of contrast of the image, a space frequency of the image in a scanning direction, and dispersion of the space frequency. Calculation of the sound speed determination index may be performed after image generation at all assumed sound speeds (after step S**142**).

Then, steps S**132** to S**142** are repeated, and when arithmetical operations at all assumed sound speed values are finished (Yes in step S**142**), a local sound speed value at the lattice point X_{ROI} is determined on the basis of the sound speed determination index (step S**144**).

Then, the processing shown in FIG. **13** is repeated in order from the shallowest layer, and local sound speed values at lattice points ($A1_1, A2_1, \ldots, A1_2, A2_2, \ldots, A1_N, A2_N, \ldots$) in a deeper layer are successively obtained to calculate a local sound speed value in the desired region of interest ROI (lattice point X_{ROI}) in the subject OBJ.

According to the embodiment, the acoustic ray tracing is repeated in order from the shallow layer in the subject OBJ to determine the local sound speed value, thereby allowing the local sound speed value in the subject OBJ to be determined with high accuracy.

In the embodiments, the lattice points are arranged in the XY directions at regular intervals, but may be arranged at non-regular intervals so that the lattice points are arranged on a boundary between regions with a substantially uniform sound speed. The region with a substantially uniform sound speed is considered to be a substantially identical region with uniform brightness in an amplitude image, and thus the lattice points may be arranged along a boundary where average brightness changes by a threshold or more. High brightness is obtained in a tissue boundary with different acoustic impedances, and thus the lattice points may be arranged along a place with higher brightness than other places by a threshold or more. Further, an edge (of brightness of the B mode image) is detected by a differentiation filter or the like, and the lattice points may be set along the edge. Further, a user can set the arrangement of the boundary between the regions A and B and the lattice points on the boundary using a pointing device **204** or the like while watching the B mode image.

The embodiments may be applied to a case where the ultrasound transducers are two-dimensionally arranged, or the ultrasound transducers are arranged in any curved shape rather than a planar shape.

Also, at least one of a transmitting focus process and a receiving focus process may be performed according to the optimum sound speed, the received waveform, or the delay curve of each region (each lattice point) obtained in the embodiments to reconstruct the B mode image.

In the embodiments, a threshold for setting the lattice points may be adjusted so that the number of lattice points per unit area is a predetermined number or more, or the lattice points are laterally arranged at a predetermined density or more.

In the embodiment, when the environmental sound speeds at the lattice points A**1**, A**2**, . . . and the lattice point X_{ROI} are obtained, or when the local sound speed at the lattice point X_{ROI} is obtained based on the received waves from the lattice points A**1**, A**2**, . . . , the received waves are not determined on the basis of only the environmental sound speeds or the local sound speeds, but correlation of ultrasound detection signals detected by adjacent elements may be taken, and contrast and sharpness may be determined to determine the received waves by adjusting a delay. This provides a smooth waveform of the received wave and increases accuracy of sound speed determination.

In the environmental sound speed determination process or the local sound speed determination process, the transmitting focus may be changed in addition to the receiving focus process. Not only that a delay is obtained based on an assumed resultant received wave determined by a local sound speed value assumed for the lattice point X_{ROI}, the receiving focus is performed according to the delay; or the receiving focus is performed according to the delay determined by the environmental sound speed assumed for the lattice point X_{ROI}; but also that the transmitting focus is performed to allow an increase in determination accuracy of a sound speed. For example, a delay added at transmitting timing of ultrasound from each element in actual transmission of ultrasound to the lattice point X_{ROI} may be changed, or an assumed transmission delay in aperture synthesis of an ultrasound beam (transmission wave) may be changed.

What is claimed is:

1. An ultrasound diagnostic apparatus comprising:

an ultrasound probe including a plurality of ultrasound transducers configured to transmit ultrasound to a subject and configured to receive the ultrasound reflected by the subject to output an ultrasound detection signal; and

a local sound speed calculating device configured to calculate a local sound speed in a region between a point of interest and shallow points in the subject, based on ultrasound detection signals which correspond to the point of interest and the shallow points and are output by the plurality of ultrasound transducers, the shallow points being arranged between the point of interest and the

ultrasound probe in the subject, positions of the shallow points being shallower than that of the point of interest.

2. The ultrasound diagnostic apparatus according to claim 1,

wherein when the ultrasound probe outputs the ultrasound detection signals corresponding to the point of interest and the shallow points in the subject, the ultrasound probe changes a transmitting focus for each of the point of interest and the shallow points to transmit the ultrasound to the subject.

3. The ultrasound diagnostic apparatus according to claim 1,

wherein the local sound speed calculating device comprises:

an optimum sound speed obtaining device configured to obtain optimum sound speeds of the point of interest and the shallow points based on the ultrasound detection signals output by the plurality of ultrasound transducers corresponding to the point of interest and the shallow points; and

a calculating device configured to calculate the local sound speed in the region between the point of interest and the shallow points based on the optimum sound speeds.

4. The ultrasound diagnostic apparatus according to claim 3, further comprising

a received wave calculating device configured to calculate received waves of the plurality of ultrasound transducers based on the optimum sound speeds of the point of interest and the shallow points,

wherein the local sound speed calculating device compares received waves from the point of interest with resultant received waves from the point of interest to calculate the local sound speed,

wherein each of the resultant received waves is calculated based on a propagation time of the ultrasound from the point of interest to the shallow points and a received wave from the shallow points, and

wherein the propagation time is calculated based on an assumed sound speed set in the region between the point of interest and the shallow points.

5. The ultrasound diagnostic apparatus according to claim 3,

wherein the local sound speed calculating device compares receiving times at the point of interest with resultant receiving times at the point of interest,

wherein the resultant receiving times are calculated based on propagation times of the ultrasounds from the point of interest to the shallow points and optimum sound speeds at the shallow points, and

wherein the propagation time is calculated based on an assumed sound speed set in the region between the point of interest and the shallow points.

6. The ultrasound diagnostic apparatus according to claim 3,

wherein the local sound speed calculating device calculates the local sound speed in the region between the point of interest and the shallow points based on an optimum sound speed of the point of interest and optimum sound speeds of the shallow points and a look up table representing a relationship between an optimum sound speed and a local sound speed.

7. The ultrasound diagnostic apparatus according to claim 1,

wherein the local sound speed calculating device comprising:

an optimum sound speed obtaining device configured to obtain optimum sound speeds at the shallow points;

an image generating device configured to generate an image of a region near the point of interest based on an assumed sound speed in the region between the point of interest and the shallow points and the optimum sound speeds at the shallow points;

an image analyzing device configured to perform an analysis of the generated image; and

a calculating device configured to calculate the local sound speed of the region between the point of interest to the shallow points based on a result of the analysis of the generated image.

8. The ultrasound diagnostic apparatus according to claim 7, further comprising

a received wave calculating device configured to calculate received waves based on the optimum sound speeds at the shallow points,

wherein the image generating device synthesizes a resultant received wave based on a propagation time from the point of interest to each of the shallow points, the propagation time being calculated based on an assumed sound speed set in the region between the point of interest and the shallow points and the received waves from the shallow points, and the image generating device generates the image based on a delay obtained from the resultant received wave.

9. The ultrasound diagnostic apparatus according to claim 7,

wherein the image generating device obtains a delay based on a propagation time from the point of interest to each of the shallow points, the propagation time being calculated based on an assumed sound speed set in the region between the point of interest and the shallow points and the optimum sound speeds at the shallow points, and generates the image based on the delay.

10. The ultrasound diagnostic apparatus according to claim 6, further comprising

a received signal obtaining device configured to obtain, when the shallow points are regarded as assumed elements, received signals at the assumed elements based on the optimum sound speeds at the shallow points,

wherein the image generating device generates the image from the received signals at the assumed elements based on the assumed sound speed of the region.

11. The ultrasound diagnostic apparatus according to claim 1, further comprising

a point setting device configured to set the shallow points on a boundary between regions with a uniform sound speed in the subject.

12. The ultrasound diagnostic apparatus according to claim 1, further comprising

a display device configured to display a calculation result of the local sound speed.

13. The ultrasound diagnostic apparatus according to claim 12, further comprising

an amplitude image generation device configured to generate an amplitude image indicating an amplitude of the ultrasonic detection signal with brightness of a point,

wherein the display device displays the calculation result of the local sound speed so as to be superimposed on the amplitude image or placed with the amplitude image side by side.

14. The ultrasound diagnostic apparatus according to claim 12, further comprising

an amplitude image generation device configured to generate an amplitude image indicating an amplitude of the ultrasonic detection signal with brightness of a point,

wherein the display device displays the calculation result of the local sound speed by changing brightness or color of the amplitude image.

15. The ultrasound diagnostic apparatus according to claim 12, further comprising

a display mode switching device configured to switch a display mode between a first display mode in which the amplitude image is displayed alone and a second display mode in which the calculation result of the local sound speed in the subject is displayed.

16. The ultrasound diagnostic apparatus according to claim 1,

wherein the point of interest is a representative point in the region of interest in the subject.

17. The ultrasound diagnostic apparatus according to claim 3,

wherein an optimum sound speed of each point of the point of interest and the shallow points is a sound speed with a highest sharpness of an image at the each point.

18. The ultrasound diagnostic apparatus according to claim 7,

wherein an optimum sound speed of each point of the point of interest and the shallow points is a sound speed with a highest sharpness of an image at the each point.

19. The ultrasound diagnostic apparatus according to claim 1,

wherein the local sound speed calculating device calculates the local sound speed in the region between a point of interest and shallow points in the subject based on ultrasound detection signals of ultrasound from the point of interest which is to be detected through the shallow points and the ultrasound detection signals of ultrasound which is reflected from the point of interest.

* * * * *

专利名称(译)	超声诊断设备和超声诊断方法		
公开(公告)号	US9241690	公开(公告)日	2016-01-26
申请号	US13/736630	申请日	2013-01-08
[标]申请(专利权)人(译)	富士胶片株式会社		
申请(专利权)人(译)	富士胶片株式会社，		
当前申请(专利权)人(译)	富士胶片株式会社		
[标]发明人	KATSUYAMA KIMITO		
发明人	KATSUYAMA, KIMITO		
IPC分类号	A61B8/00 G01N29/06 A61B8/08 G01H5/00 G01N29/07		
CPC分类号	A61B8/52 A61B8/00 G01H5/00 G01N29/0672 G01N29/07 G01N2291/02475 G01N2291/044 G01N2291/106		
优先权	2008245519 2008-09-25 JP 2009088363 2009-03-31 JP		
其他公开文献	US20130131516A1		
外部链接	Espacenet USPTO		

摘要(译)
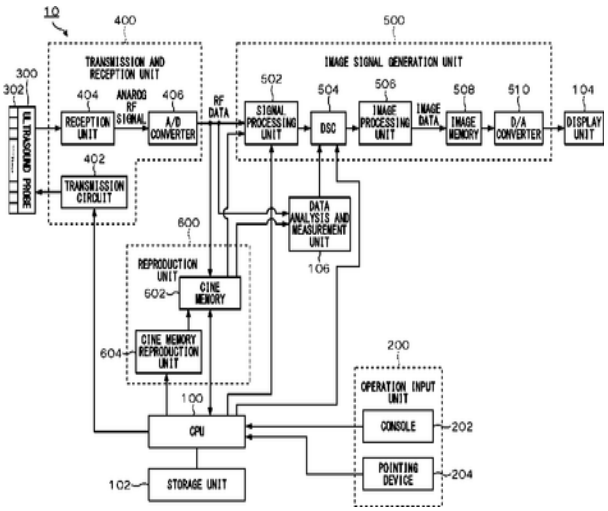
一种超声诊断设备，包括：超声探头，包括多个超声换能器;用于基于超声波探头输出的超声波检测信号，在比感兴趣区域（ROI）更浅的区域中设置的格点处和ROI中确定最佳声速值的装置;一种用于根据最佳声速值算术运算从ROI接收的接收波的装置;用于在感兴趣区域中设定假定声速的装置，基于假定的声速和格点处的最佳声速值获得从每个格点接收的接收波，并且在格点处合成接收波获得合成的接收波;以及用于根据接收波和所得到的接收波确定ROI中的局部声速值的装置。