US 20030092997A1

(19) United States

(12) Patent Application Publication

(10) Pub. No.: US 2003/0092997 A1

(43) Pub. Date: May 15, 2003

Edwardsen et al.

(54) TRANSESOPHAGEAL ULTRASOUND PROBE HAVING A ROTATING ENDOSCOPE SHAFT

(76) Inventors: **Stephen Dodge Edwardsen**, Sandefjord (NO); **Dag Jordfald**, Horten (NO)

Correspondence Address:
MCANDREWS HELD & MALLOY, LTD
500 WEST MADISON STREET
SUITE 3400
CHICAGO, IL 60661

(21) Appl. No.: 10/317,158

(22) Filed: Dec. 10, 2002

Related U.S. Application Data

(63) Continuation of application No. 09/681,296, filed on Mar. 14, 2001.

Publication Classification

(51) Int. Cl.[7] A61B 6/00

(52) U.S. Cl. 600/476

(57) **ABSTRACT**

A transesophageal ultrasound probe is provided for imaging internal structures via an imaging element located on the distal end of a rotating endoscope shaft. The probe includes a rotating endoscope having an imaging element, such as a transducer, mounted on the distal end of the rotating endoscope shaft. The probe also includes a control handle for controlling the imaging controls and a rotation tube that extends through the rotating endoscope shaft and into the control handle. The rotating shaft rotates relative to, and independently of, the control handle. Preferably, the rotating shaft is rotated via a rotation control wheel located at the distal end of the control handle. The rotation control wheel is fastened or bonded to the rotating tube so that manual rotation of the control wheel causes the rotation tube to rotate, and therefore, the rotating shaft to rotate. Because the rotating endoscope shaft rotates, an imaging element located on, or within, the rotating shaft also rotates. The rotating shaft may also be set in a locked position so that the rotating shaft may be configured, or preset, to various rotated positions. Alternatively, the rotation of the rotating endoscope shaft may be fully automated. By including a motor fixed to a fixed portion of the shaft, or to the control handle. The motor also includes a driving cog wheel, or gear system, that operatively engages a driven cog wheel, or gear system, attached to a rotating portion of the shaft. The rotation of the rotating shaft may then be controlled by levers, potentiometers, or other such devices located on the control handle.

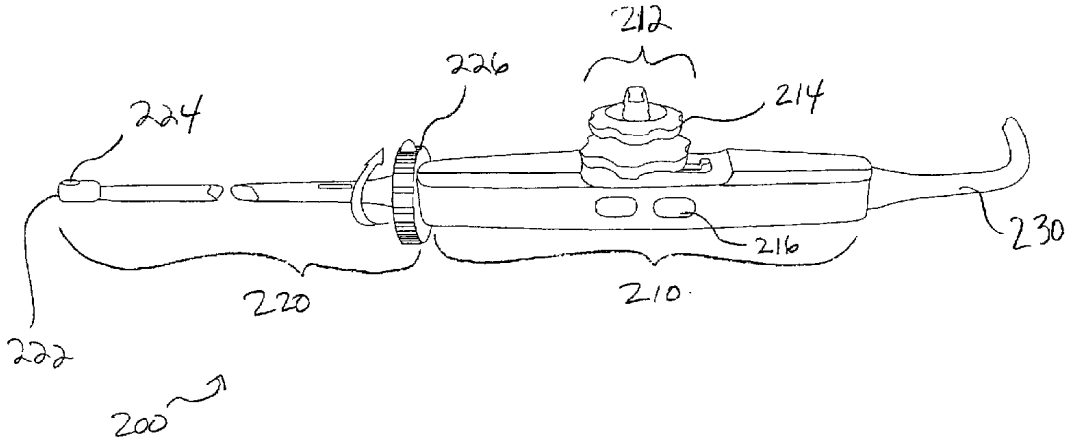

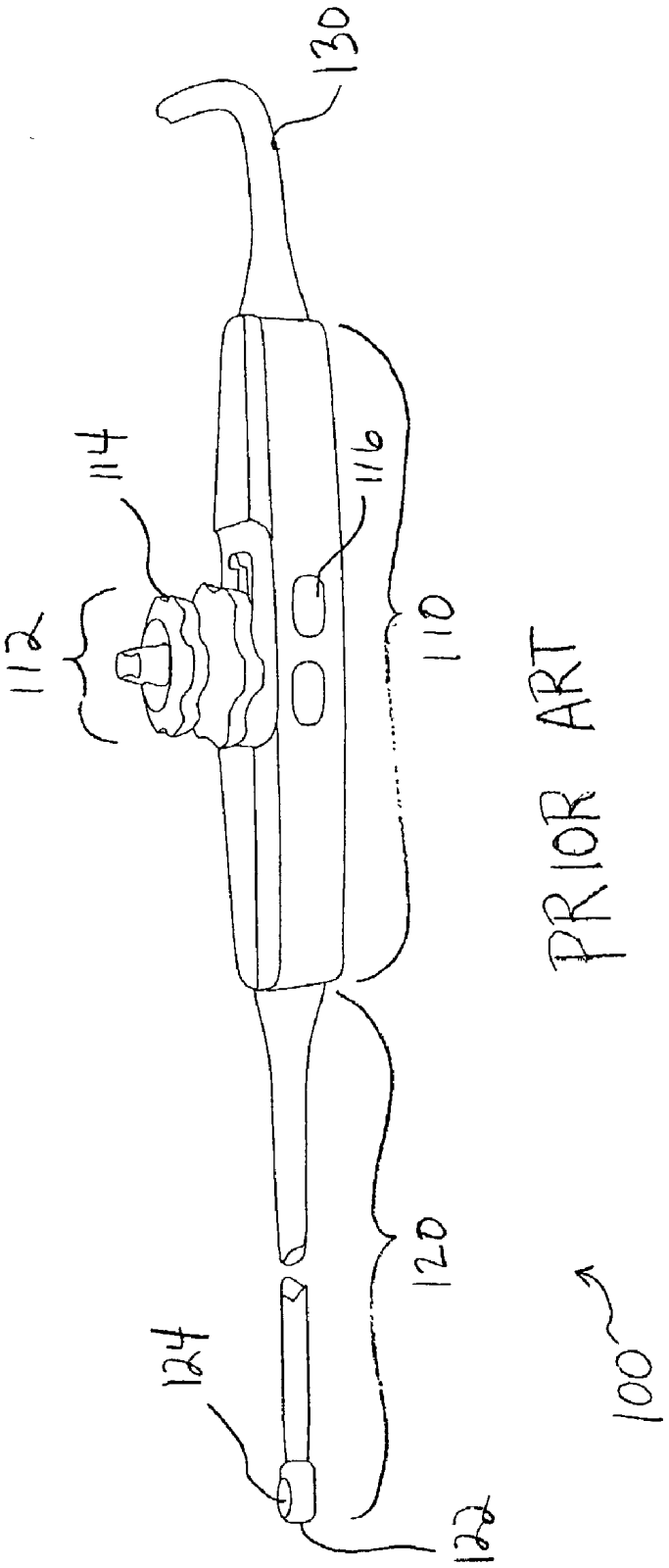

PRIOR ART

FIGURE 1

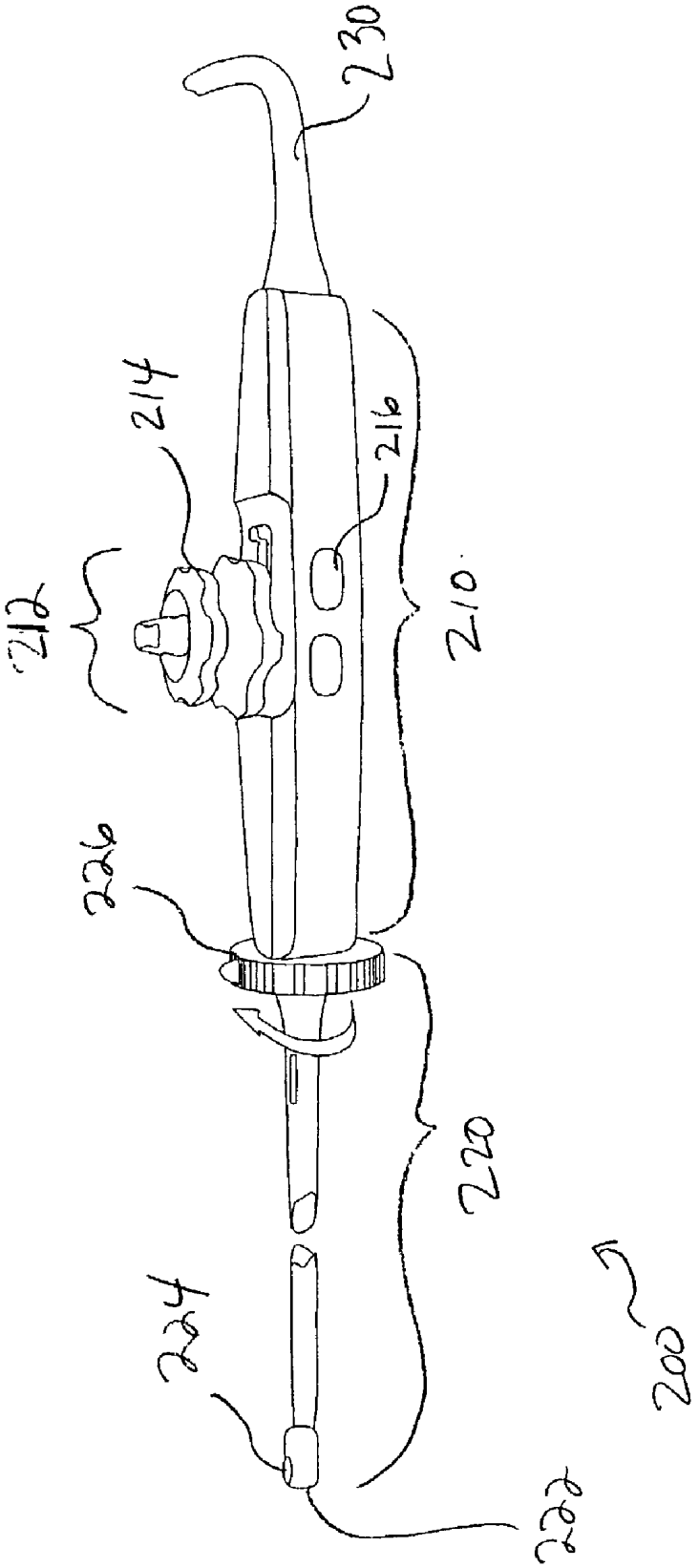

FIGURE 2

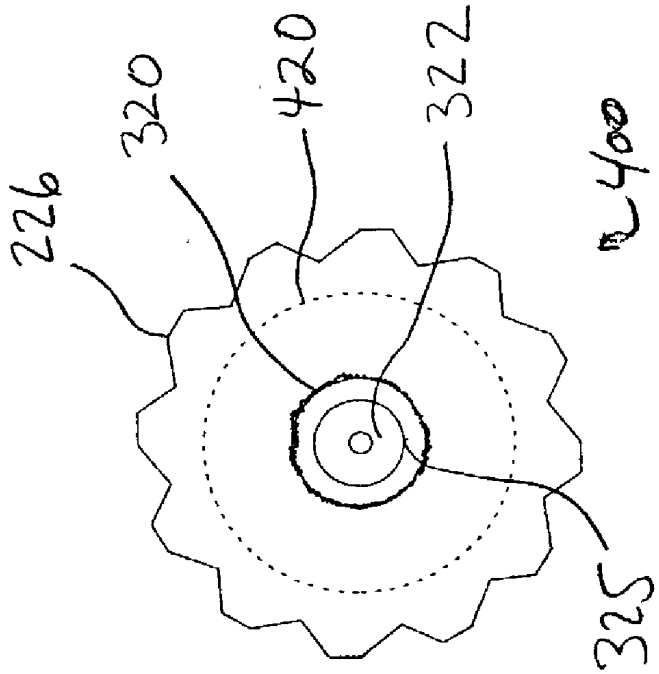

FIGURE 4

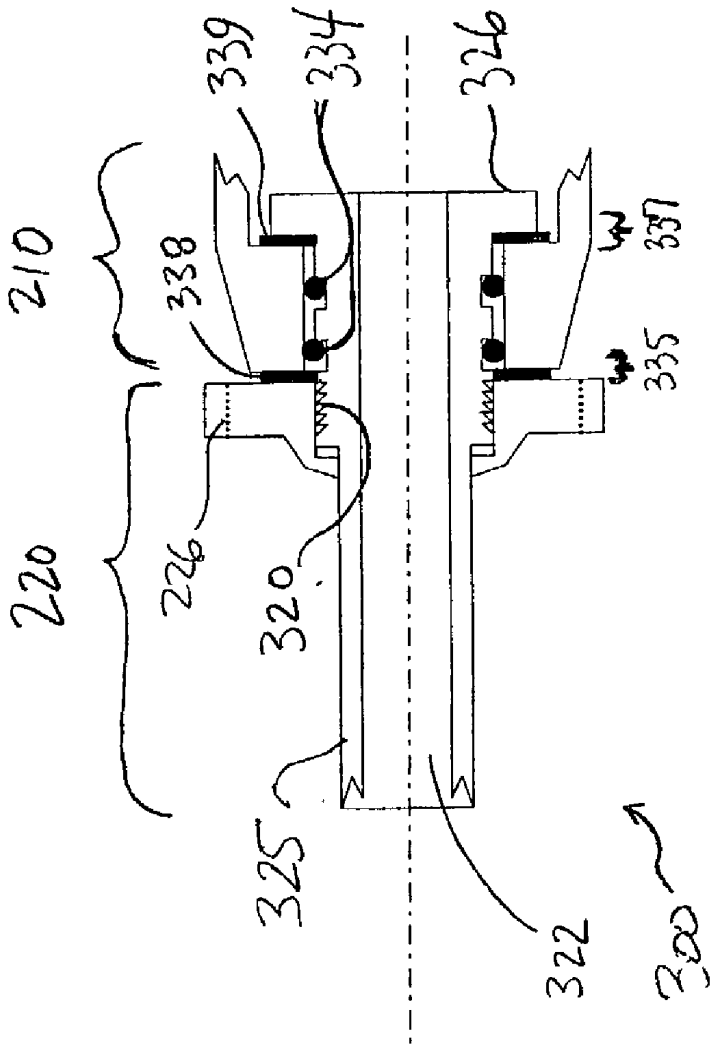

FIGURE 3

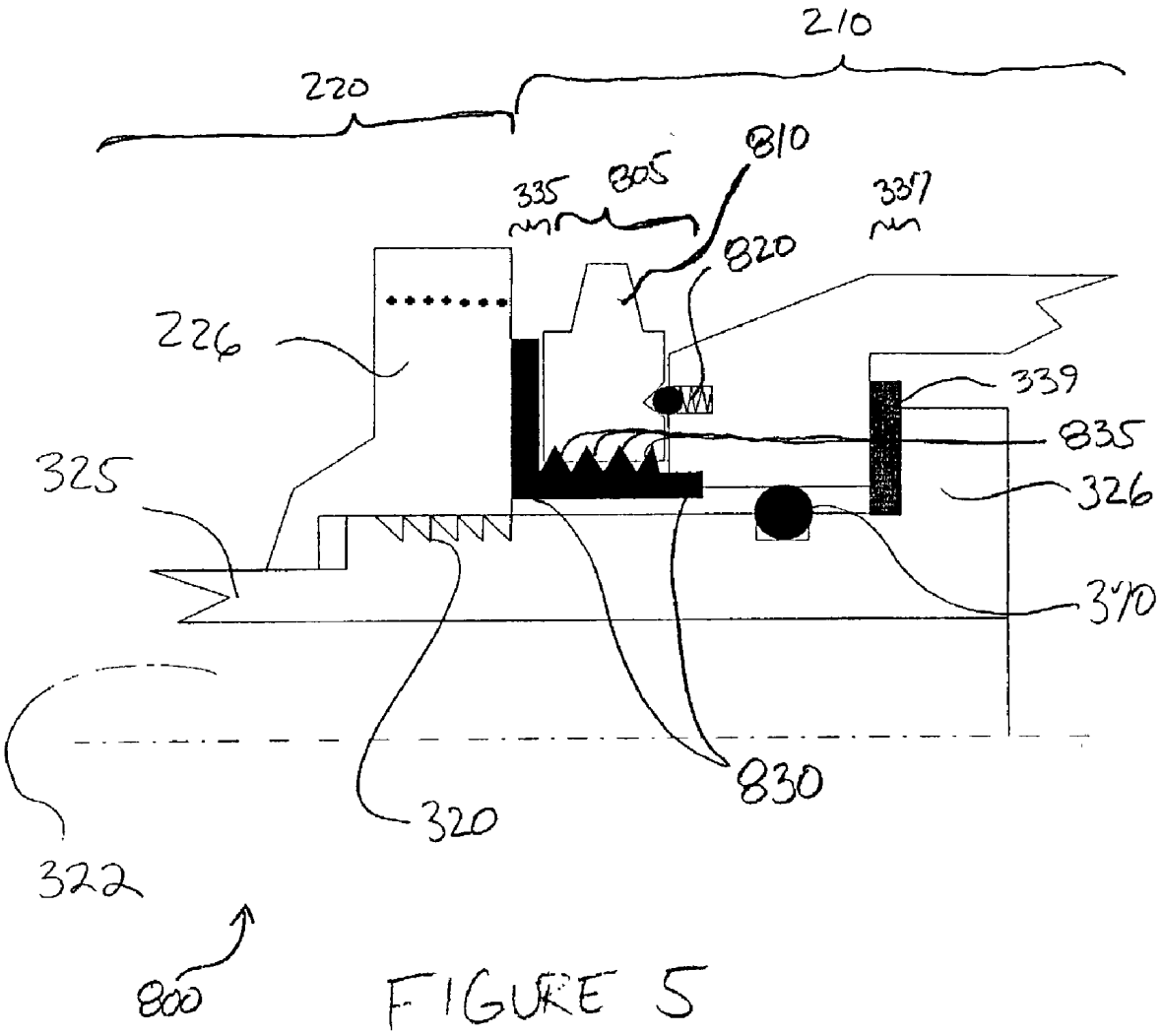
210
220
810
335
805
337
820
226
339
835
325
326
370
830
320
322
800

FIGURE 5

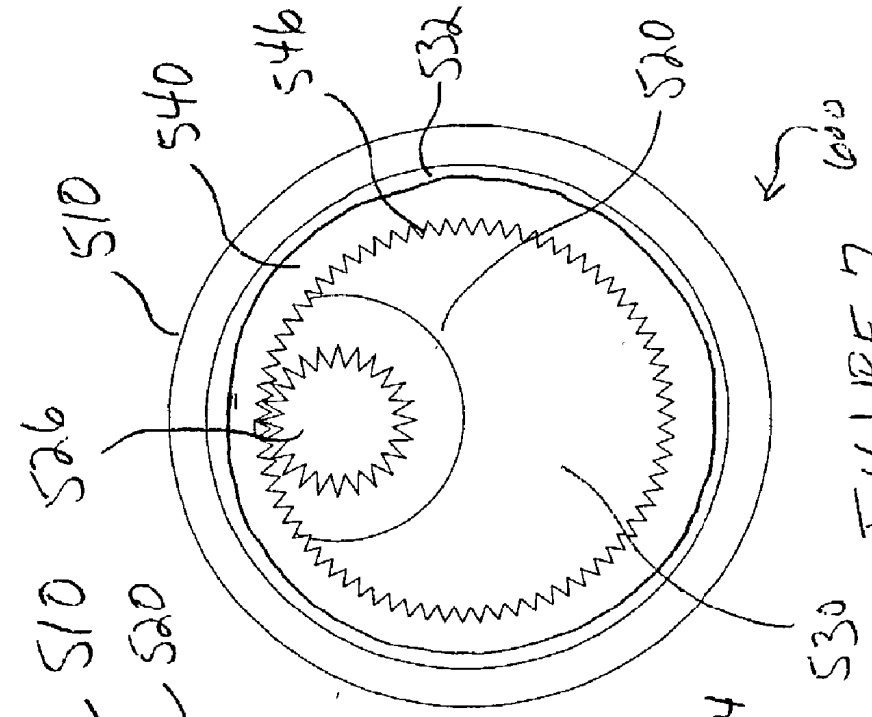

FIGURE 7

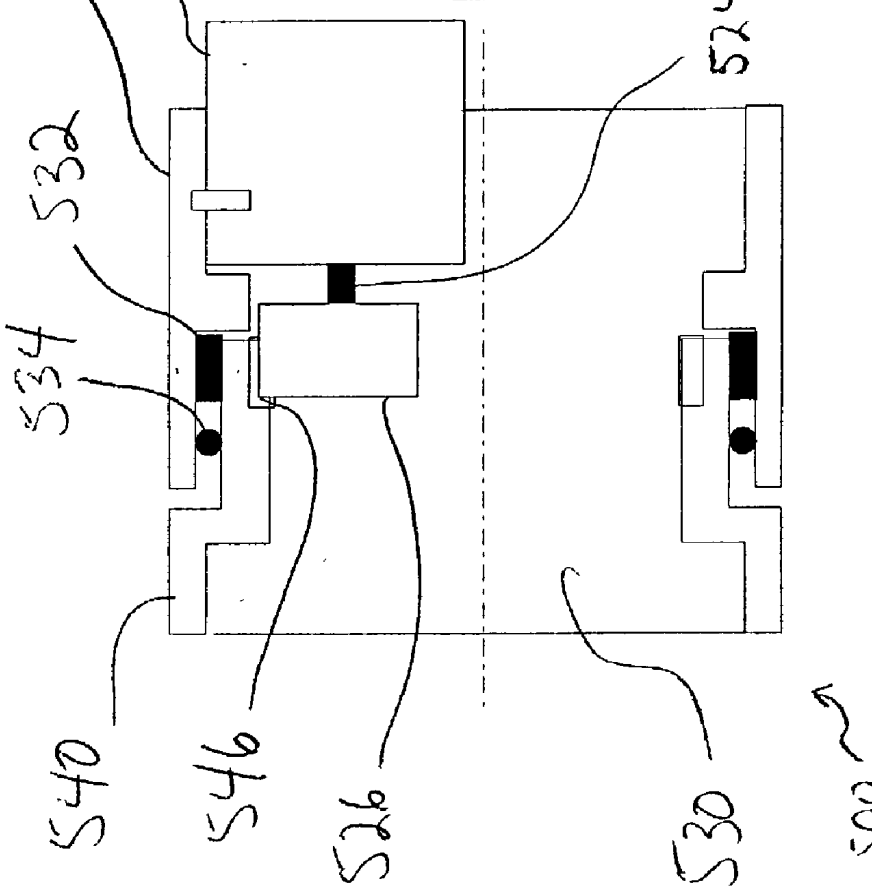

FIGURE 6

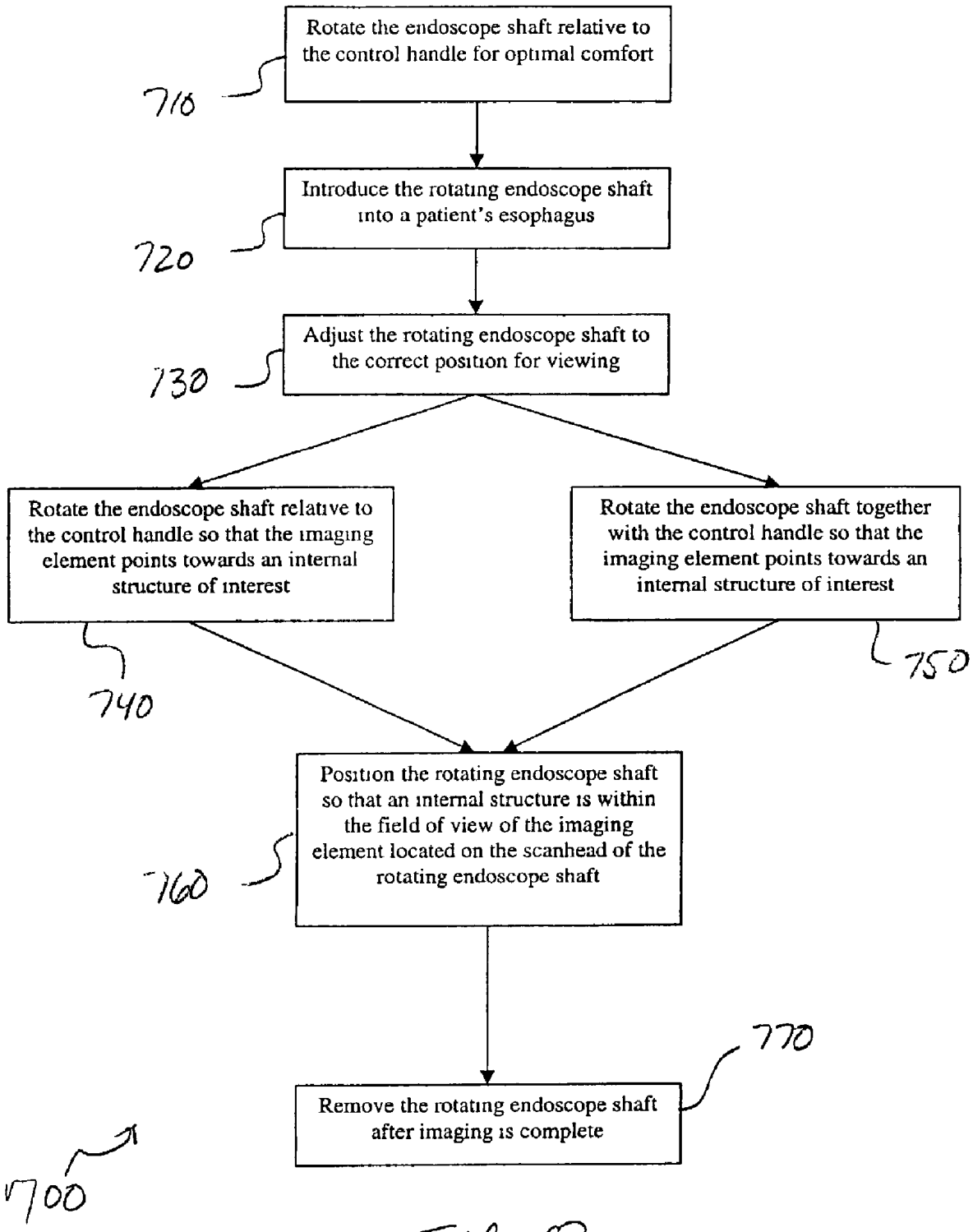
Rotate the endoscope shaft relative to the control handle for optimal comfort
710
Introduce the rotating endoscope shaft into a patient's esophagus
720
Adjust the rotating endoscope shaft to the correct position for viewing
730
Rotate the endoscope shaft relative to the control handle so that the imaging element points towards an internal structure of interest
740
Rotate the endoscope shaft together with the control handle so that the imaging element points towards an internal structure of interest
750
Position the rotating endoscope shaft so that an internal structure is within the field of view of the imaging element located on the scanhead of the rotating endoscope shaft
760
Remove the rotating endoscope shaft after imaging is complete
770
700

FIG. 8

TRANSESOPHAGEAL ULTRASOUND PROBE HAVING A ROTATING ENDOSCOPE SHAFT

RELATED APPLICATIONS

[0001] This application is a Continuation of Ser. No. 09/681,296, filed Mar. 14, 2001, now pending, entitled "Transesophageal Ultrasound Probe Having A Rotating Endoscope Shaft."

BACKGROUND OF THE INVENTION

[0002] A preferred embodiment of the present invention generally relates to transesophageal probes, and more particularly relates to an improved transesophageal ultrasound probe having a rotating endoscope shaft.

[0003] Various medical conditions affect internal organs and structures. Efficient diagnosis and treatment of these conditions typically require a physician to directly observe a patient's internal organs and structures. For example, diagnosis of various heart ailments often requires a cardiologist to directly observe affected areas of a patient's heart. Instead of more intrusive surgical techniques, ultrasound imaging is often utilized to directly observe images of a patient's internal organs and structures.

[0004] Transesophageal Echocardiography (TEE) is one approach to observing a patient's heart through the use of an ultrasound transducer. TEE typically includes a probe, a processing unit, and a monitor. The probe is connected to the processing unit which in turn is connected to the monitor. In operation, the processing unit sends a triggering signal to the probe. The probe then emits ultrasonic signals into the patient's heart. The probe then detects echoes of the previously emitted ultrasonic signals. Then, the probe sends the detected signals to the processing unit which converts the signals into images. The images are then displayed on the monitor. The probe typically includes a semi-flexible endoscope that includes a transducer located near the end of the endoscope.

[0005] Typically, during TEE, the endoscope is introduced into the mouth of a patient and positioned in the patient's esophagus. The endoscope is then positioned so that the transducer is in a position to facilitate heart imaging. That is, the endoscope is positioned so that the heart or other internal structure to be imaged is in the direction of view of the transducer. Typically, the transducer sends ultrasonic signals through the esophageal wall that come into contact with the heart or other internal structures. The transducer then receives the ultrasonic signals as they bounce back from various points within the internal structures of the patient. The transducer then sends the received signals back through the endoscope typically via wiring. After the signals travel through the endoscope, the signals enter the processing unit typically via wires connecting the endoscope to the processing unit.

[0006] Often, in addition to the heart, it may be desirable to image other internal structures within the body of a patient. Imaging other internal structures may require re-positioning of the probe in order to view the internal organs. Additionally, viewing the heart and/or other internal structures from various angles and perspectives may require re-positioning of the probe.

[0007] **FIG. 1** illustrates a conventional transesophageal ultrasound probe **100** according to one embodiment of the prior art. The probe **100** includes a control handle **110**, a fixed endoscope shaft **120** fastened to the distal end of the control handle **110**, and a system cable **130** attached to the proximal end of the control handle **110**. The fixed endoscope shaft **120** includes a scanhead **122** located at the distal end of the fixed endoscope shaft **120**. The scanhead **122** includes an imaging element **124**, such as a transducer (not shown). The control handle **110** includes imaging controls **112** mounted on the control handle **110**. The imaging controls **112** include imaging control wheels **114** and scan plane push buttons **116** that control the orientation of the seanhead **122**. The imaging element **124** is connected to a processing unit (not shown) via wiring (not shown) that extends through the scanhead **122** and throughout the length of the body of the probe **100**. The wiring in the probe **100** is then connected via the system cable **130** to the processing unit. The processing unit is then connected via wiring to a monitor (not shown) for display of the image.

[0008] In operation, the fixed endoscope shaft **120** of the probe **100** is introduced into the esophagus of a patient. The fixed endoscope shaft **120** is then positioned via the control handle **110** so that the internal structure to be imaged is within the field of view of the imaging element **124** located on, or within, the scanhead **122**. Typically, the probe **100** is axially rotated to position the desired internal structure in the field of view of the imaging element **124**. In order to rotate the endoscope shaft **120**, the entire probe **100** must be rotated. That is, the control handle **110** must be rotated so that the imaging element **124** may image internal structures from different angles and perspectives. For example, to rotate the direction of view **124** of the imaging element of the scanhead **122** by 30°, the control handle **110** typically needs to be rotated 30° because the fixed endoscope shaft **120** is firmly fixed to the control handle **110**. Thus, the fixed endoscope shaft **120** is not allowed to rotate independently of the control handle **110**. Therefore, as the control handle **110** is rotated by 30°, the imaging controls **122** will also be rotated by 30°. Unfortunately, rotating the imaging controls **122** often may cause confusing and/or counter-intuitive operation of the probe **100**. That is, because the imaging controls **112** are fixed, it may be difficult or impossible for an operator to obtain the images he/she desires. Further, observing the resulting images from the physically rotated probe may be confusing. The confusion may lead to misdiagnosis, risks of injury and/or increased time to perform the imaging procedure.

[0009] Therefore, a need has existed for a transesophageal ultrasound probe that provides greater and easier access to images of a patient's internal structures. Further, a need has also existed for a transesophageal ultrasound probe that facilitates more intuitive imaging of internal structures from various angles and perspectives.

SUMMARY OF THE INVENTION

[0010] The present invention relates to an internal imaging probe for use in a medical imaging system. The probe includes a rotating shaft, such as a rotating endoscope shaft, having an imaging element, such as a transducer, mounted on the distal end of the rotating shaft. The probe also includes a control handle for controlling the imaging element. Preferably, a rotating tube within the probe extends through the rotating shaft into the control handle. The rotation of the rotating tube causes the rotating shaft to

rotate. The rotating shaft rotates relative to, and independently of, the control handle to which it is connected. Washers and O-rings provide low friction connections between the rotating tube located in the probe and the control handle.

[0011] Preferably, the rotating shaft is rotated via a rotation control wheel located at the distal end of the control handle. The rotation control wheel is fastened or bonded to the rotating tube so that manual rotation of the control wheel causes the rotating tube, and therefore the rotating shaft, to rotate. Because the rotating shaft rotates, an imaging element located on, or within, the rotating shaft also rotates. The rotating shaft may also be set in a locked position so that the rotating shaft may be configured, or preset, to various rotated positions.

[0012] Alternatively, the rotation of the rotating shaft may be fully automated. The automated probe may include a motor fixed to a fixed portion of the shaft, or to the control handle. The motor also includes a driving cog wheel, or gear system, that operatively engages a driven cog wheel, or gear system, attached to a rotating portion of the shaft. The rotation of the rotating shaft may then be controlled by levers, potentiometers, or other such devices located on the control handle.

BRIEF DESCRIPTION OF THE DRAWINGS

[0013] **FIG. 1** illustrates a conventional transesophageal ultrasound probe according to one embodiment of the prior art.

[0014] **FIG. 2** illustrates a transesophageal ultrasound probe according to a preferred embodiment of the present invention.

[0015] **FIG. 3** illustrates a transverse cross-sectional view of the transesophageal ultrasound probe of **FIG. 2** according to a preferred embodiment of the present invention.

[0016] **FIG. 4** illustrates an axial cross-sectional view through the rotation control wheel of the transesophageal ultrasound probe of **FIG. 2** according to a preferred embodiment of the present invention.

[0017] **FIG. 5** illustrates a transverse cross-sectional view of the transesophageal ultrasound probe of **FIG. 2** with a braking mechanism according to an alternative embodiment of the present invention.

[0018] **FIG. 6** illustrates a transverse cross-sectional view of a transesophageal ultrasound probe segment according to an alternative embodiment of the present invention.

[0019] **FIG. 7** illustrates an cross-sectional axial view of the transesophageal ultrasound probe segment of **FIG. 6** according to an alternative embodiment of the present invention.

[0020] **FIG. 8** illustrates a flow chart of a preferred embodiment of the present invention.

DETAILED DESCRIPTION OF THE INVENTION

[0021] The foregoing summary, as well as the following detailed description of the preferred embodiments of the present invention, will be better understood when read in conjunction with the appended drawings. For the purpose of illustrating the invention, there are shown in the drawings, embodiments which are presently preferred. It should be understood, however, that the present invention is not limited to the precise arrangements and instrumentality shown in the attached drawings.

[0022] **FIG. 2** illustrates a transesophageal ultrasound probe **200** according to a preferred embodiment of the present invention. The probe **200** includes a control handle **210**, a rotating endoscope shaft **220** extending from the control handle **210**, and a system cable **230** connecting the control handle **210** to a processing unit (not shown). The control handle **210** includes imaging controls **212** mounted on the control handle **210**. The imaging controls **212** include imaging control wheels **214** and scan plane push buttons **216** for controlling the movement of an imaging element **224** located on, or within, the distal end of the imaging probe **200**. The rotating endoscope shaft **220** includes a scanhead **222**. The scanhead **222** includes the imaging element **224**, such as a transducer. Preferably, the imaging element is located at the distal end of the rotating endoscope shaft **220**. Additionally, the rotating endoscope shaft **220** includes a rotation control wheel **226** fastened to the rotating shaft **220** and located at the distal end of the control handle **210**.

[0023] **FIG. 3** illustrates a transverse cross-sectional view **300** of the transesophageal ultrasound probe **200** of **FIG. 2** according to a preferred embodiment of the present invention. The cross sectional view **300** includes the control handle **210**, the rotating endoscope shaft **220**, a rotating tube **325** having an extended proximal end **326**, the rotation control wheel **226**, a threaded interface **320**, an inner cavity **322**, a wheel stop area **335**, a washer **338**, O-rings **334**, a tube stop area **337**, and a washer **339**. The rotating tube **325** extends throughout the body of the rotating shaft **220** and into the control handle **210**. The inner cavity **322** is formed within the rotating tube **325**. The rotating tube **325** is fastened to the rotation control wheel **226** at the threaded interface **320**. The rotation control wheel **226** abuts the wheel stop area **335** via the washer **338**. The washer **338** in turn abuts the control handle **210**. The control handle **210** is connected to the rotation tube **325** via the O-rings **334**. The control handle **210** abuts the tube stop area **337** via the washer **339**. The washer **339** in turn abuts the extended proximal end **326** of the rotation tube **325**. The washer **338** and O-rings **334** provide a low-friction connection between the control handle **210** and the rotation control wheel **226**. Similarly, the washer **339** and O-rings **334** provide a low-friction connection between the control handle **210** and the extended proximal end **326** of the rotation tube **325**. Additionally, the O-rings **334** provide a sealing connection between the control handle **210** and the rotating tube **325**.

[0024] **FIG. 4** illustrates an axial cross-sectional view **400** through the rotation control wheel **226** of the transesophageal ultrasound probe **200** of **FIG. 2** according to a preferred embodiment of the present invention. **FIG. 4** includes the rotation tube **325** defining the inner cavity **322**, the threaded interface **320**, a reference line **420** illustrating the circumference of the extended control handle **210** and the control wheel **226**.

[0025] Referring to **FIG. 3**, the rotating tube **325** is fastened to the control wheel **226** via the threaded interface **320**. Preferably, the rotating tube **325** is securely fastened to the rotation control wheel **226** via the threaded interface **320**

with a fastening agent, such as glue or some other fastening agent, that forms a fluid-tight seal. The control wheel **226** is separated from the control handle **210** by the washer **338**. For example, the washer may be a low friction plastic washer that fits over the rotating tube **325**. Alternatively, the washer **338** may be a locking washer. In addition to providing a low friction interface between the rotation control wheel **226** and the control handle **210**, the washer **338** also provides a seal between the rotation control wheel **226** and the control handle **210**. Additionally, the O-rings **334** form a fluid-tight seal between the control handle **210** and the rotating endoscope shaft **220**.

[**0026**] The control handle **210** is separated from the proximal end **326** of the rotating tube **325** by the washer **339**. Preferably, the diameter of the proximal end **325** of the rotating tube **325** is greater than the diameter of the internally introduced portion of the rotating tube **325**. Preferably, the proximal end **325** of the rotating tube **325** abuts the tube stop area **337** when the probe **200** of **FIG. 2** is fully assembled.

[**0027**] During assembly, the rotation control wheel **226** is rotated on the thread of the rotating rube **325** while the rotating tube **325** does not rotate, thus introducing the proximal end **326** of the rotating tube **325** into contact with the tube stop area **337** as the rotation control wheel **226** comes into contact with the wheel stop area **335**. The washer **338** cushions and seals a low-friction connection between the rotation control wheel **226** and the control handle **210** as the rotation control wheel **226** and the control handle **210** come together. Similarly, the washer **339** cushions and seals a low-friction connection between the proximal end **326** of the rotation tube **325** and the control handle **210** as the proximal end **326** of the rotation tube **325** and the control handle **210** come together.

[**0028**] Once the rotation control wheel **226** has been rotated to its fullest extent, the rotation control wheel **226** is sealed to the rotating tube **325** at the threaded interface **320**. Thus, the washer **338** forms a compressive seal between the rotation control wheel **226** and the control handle **210**; and the washer **339** forms a compressive seal between the proximal end **326** of the rotation tube **325** and the control handle **210** at the tube stop area **337**. Washers and O-rings may be integrated as part of the rotation control wheel **226**, rotating tube **325** or the control handle **210** if necessary. For example, if the rotation control wheel **226** is composed of hard plastic, then the washer **338** may not be necessary.

[**0029**] In general, the probe **200** of **FIG. 2** may be included in a medical imaging system. Such a medical imaging system may include the probe **200**, a processing unit (not shown), and a monitor (not shown). In operation, an internal structure is imaged by the probe **200** and the resultant image is sent to the processing unit for processing and display on the monitor.

[**0030**] Referring again to **FIG. 2**, in operation, the rotating endoscope shaft **220** is introduced into the patient's esophagus via the patient's mouth in a similar fashion as that of the conventional probe **100** of **FIG. 1**. Once the rotating endoscope shaft **220** is introduced, the rotating endoscope shaft **220** is positioned such that an internal structure to be imaged is within the field of view of the imaging element **224**. The imaging element **224**, such as a transducer, located within the scanhead **222** is controlled via the imaging controls **212** located on the control handle **210**. The imaging element **224** is connected to the imaging controls **212** via wiring (not shown) within the inner cavity **322** of the probe **200**. During imaging, the imaging element **224** of the scanhead **222** sends and receives signals through wiring (not shown) located within the inner cavity **322** of the imaging probe **200** to a processing unit (not shown) via the system cable **230**. The processing unit receives the signals via the system cable **230**, which is in turn connected to wiring located within the probe **200**.

[**0031**] During imaging, the rotating endoscope shaft **220** may be rotated relative to, and independent of, the control handle **210**. That is, the control handle **210** may remain in one orientation while the rotating endoscope shaft **220** is rotated about an axis that is common to both the rotating endoscope shaft **220** and the control handle **210**. In order to rotate the rotating endoscope shaft **220** about the common axis, the rotation control wheel **226** is turned. Because the rotating tube **325** is fastened to the rotation control wheel **226**, rotation of the rotation control wheel **226** causes a corresponding rotation in the rotating tube **325**. The rotation of the rotating tube **325** causes the rotating endoscope shaft **220** to rotate. The independent rotation of the rotating endoscope shaft **220** allows the control handle **210** to remain in the same orientation throughout the imaging process while the rotating endoscope shaft **220** rotates to allow the imaging element **224** of the scanhead **222** to image internal structures from different angles and perspectives.

[**0032**] Optionally, the rotating endoscope shaft **220** may be set, or locked, into position at any point throughout its rotation by a locking mechanism (not shown). The locking mechanism may be controlled via the rotation control wheel **226**, or additional controls located on the control handle **210**. For example, the rotating endoscope shaft **220** may be locked, or set, into a position corresponding to a position that is comfortable and intuitive to a particular physician, cardiologist, or other user of the probe **200**. For example, an individual may prefer to position the imaging element **224** fixed to the rotating endoscope shaft **220** at a 30° radial rotation with respect to the imaging controls **212** positioned on the control handle **210** before, and throughout, the imaging process. Alternatively, the rotation of the rotating endoscope shaft **220** may be sufficiently stiff so that a locking mechanism is not necessary.

[**0033**] Also, a physical end-stop may be located on the proximal end **326** of the rotating tube **325**. The end-stop may limit the rotation of the rotating tube **325** and therefore, the rotating endoscope shaft **220**, to 180° or less in order to prevent twisting the various wires and cables (not shown) located in the inner cavity **322** of the probe **220**. The end-stop may be a pin, block, notch, or other stopping mechanism attached to the proximal end **326** of rotating tube **325** that comes into contact with another pin, block, notch, or other stopping mechanism, attached to the interior of the control handle **210**.

[**0034**] **FIG. 5** illustrates a transverse cross-sectional view **800** of the transesophageal ultrasound probe **200** of **FIG. 2** with a low friction braking mechanism **805** according to an alternative embodiment of the present invention. The cross-sectional view **800** includes the control handle **210**, the rotating endoscope shaft **220**, the rotating tube **325** having the extended proximal end **326**, the rotation control wheel

226, the threaded interface **320**, the inner cavity **322**, the wheel stop area **335**, a single O-ring **370**, the tube stop area **337**, the washer **339**, and a low friction braking mechanism **805**. The braking mechanism **805** includes a brake handle **810**, a brake limit **820**, an flanged cylinder brake **830**, and a series of threads **835** between the brake handle **810** and the brake **830**. The low friction washer **338** of **FIG. 3** is replaced by the low friction braking mechanism **805**. The brake **830** is threadably fastened onto the rotating braking handle **810** via the threads **835**. The brake limit **820** is preferably a spring-ball configuration that limits, or restricts, the rotation of the brake handle **810**. The brake limit **820** is positioned within the main body of the control handle **210** and extends into the rotating braking handle **810**.

[**0035**] In operation, the brake handle **810** is engaged to brake, or lock, the rotation of the rotating tube **325**. Preferably, the brake handle **810** is rotated to brake the rotating tube **325**. Because the brake **830** is threadably fastened onto the brake handle **810**, the brake **830** moves linearly towards, or away from, the rotation control wheel **226** as the brake handle **810** is rotated. As the brake handle **810** rotates in a locking direction, the brake **830** is compressed into the rotation control wheel **226**. The brake **830** brakes the rotation control wheel **226** as the brake **830** is compressed into the rotation control wheel **226**. As the rotation of the rotation control wheel **226** is braked, the rotation of the rotating tube **325** is also braked. The brake limit **820** limits the rotation of the brake handle **810**. For example, the brake limit **820** may include pre-defined locked positions that stop the rotation of the brake handle **810** as the brake handle **810** rotates into one of the locked positions. As the brake handle **810** rotates away from the locking direction, thereby disengaging the brake **830**, the brake **830** moves away from the rotation control wheel **226**. As the brake **830** is disengaged, the rotation control wheel **226** is able to rotate; thus, the rotating tube **325** is able to rotate.

[**0036**] Alternatively, the brake mechanism **805** may include a screw that may be positioned perpendicular to the surface of the rotating tube **325** via a threaded hole in the control handle **210**. As the screw is engaged, the screw moves toward the rotating tube **325**. The screw restricts the rotation of the rotating tube **325** as the screw is threaded through the control handle **210** towards, and into, the rotating tube **325**. The rotating tube **325** may include notches that may receive the screw. As the screw enters the notches on the rotating tube **325**, the rotation of the rotating tube is restricted.

[**0037**] Alternatively, the rotation of the rotating endoscope shaft **220** may be controlled in various ways. For example, the probe **200** may be fully automated. That is, the rotation of the rotating endoscope shaft **220** may be controlled through the use of motors, gears, and/or cog wheels.

[**0038**] **FIG. 6** illustrates a transverse cross-sectional view of a transesophageal ultrasound probe segment **500** according to an alternative embodiment of the present invention. The transverse cross-sectional view includes a fixed endoscope shaft **510**, a rotating shaft **540**, bearings **532**, an inner cavity **530**, and an O-ring **534**. The fixed endoscope shaft **510** includes a motor **520** mounted to the interior of the fixed endoscope shaft **510**. The motor **510** includes an axle **524** extending toward the distal end of the probe segment **500** and a driving cog wheel **526** attached at the opposite end of the axle **524** from the motor **510**. The rotating shaft **540** includes a driven cog wheel **546** extending into the inner cavity **530**. The bearings **532** encircle the fixed endoscope shaft **510** and provide a low-friction connection between the fixed endoscope shaft **510** and the rotating shaft **540**. The inner cavity **530** is formed within the probe segment **500** and extends through the fixed endoscope shaft **510** and the rotating shaft **540**. The O-ring **534** encircles the fixed endoscope shaft **510** and provides a fluid-tight seal between the fixed endoscope shaft **510** and the rotating shaft **540**.

[**0039**] **FIG. 7** illustrates an axial cross-sectional view **600** of the transesophageal ultrasound probe segment **500** of **FIG. 6** according to an alternative embodiment of the present invention. The cross-sectional axial view **600** includes the fixed endoscope shaft **510**, the motor **520**, the driving cog wheel **526**, the inner cavity **530**, the bearing **532**, the rotating shaft **540** and the driven cog wheel **546**.

[**0040**] In operation, the rotating shaft **540** is engaged by controls (not shown), such as buttons, levers, or potentiometers, located on the control handle **210**. The motor **520** is electrically connected to the controls via wiring. When activated, the motor **520** rotates the axle **524**, which in turn, rotates the driving cog wheel **526**. The driving cog wheel **526** operatively engages the driven cog wheel **546**. Therefore, as the driving cog wheel **526** rotates, the driven cog wheel **546** rotates in the same direction as that of the driving cog wheel **526**. The rotation of the driven cog wheel **546** in turn causes the rotating shaft **540** to rotate in the same direction as that of the driven cog wheel **546**. The scanhead **222** located on the distal end of rotating shaft **540** therefore rotates as the rotating shaft **540** rotates.

[**0041**] The interface between the rotating shaft **540** and the fixed endoscope shaft **510** may be located at various points of the probe segment **500**. For example, the interface between the rotating shaft **540** and the fixed endoscope shaft **510** may be located near the control handle **210**, near the scanhead **222**, or positioned at various points between the control handle **210** and the scanhead **222**. Alternatively, the fixed endoscope shaft **510** may be part of the control handle **210** of the probe **200** of **FIG. 2**. Thus, the motor **520** may be attached to the interior of the control handle **210**.

[**0042**] **FIG. 8** illustrates a flow chart **700** of a preferred embodiment of the present invention. First, at step **710**, a physician rotates the endoscope shaft **220** relative to the control handle **210** to suit the physician's preference. That is, the physician rotates the endoscope shaft **220** at step **710** for optimal comfort. Next, at step **720**, the physician introduces the rotating endoscope shaft **220** into a patient's esophagus. The physician then adjusts, or positions, the rotating endoscope shaft **220** to a suitable position for viewing at step **730**. That is, the physician adjusts, or positions, the rotating endoscope shaft **220** to a suitable position for viewing a particular internal structure.

[**0043**] The physician then rotates the endoscope shaft **220** so that the imaging element **224** points towards an internal structure of interest. The physician may either rotate the endoscope shaft **220** relative to the control handle **210** via the rotation control wheel **226** at step **740**, or the physician may rotate the endoscope shaft **220** together with the control handle **210**. Next, at step **760**, the physician positions the rotating endoscope shaft **220** so that an internal structure to be imaged is within the field of view of the imaging element

224 located on the scanhead **222** of the rotating endoscope shaft **220**. At step **760**, the rotating endoscope shaft **220** is positioned via imaging controls **212** or other controls on the control handle **210** so that an internal structure is within the field of view of the imaging element **224** located on the scanhead **222**. After the physician positions the rotating endoscope shaft **220** so that an internal structure is within the field of view of the imaging element **224**, the internal structure is imaged. Finally, at step **770**, the physician removes the rotating endoscope shaft **220** from the esophagus of the patient after imaging is complete.

[**0044**] Alternatively, the physician may rotate the rotating endoscope shaft **220** via the rotation control wheel **226** during the imaging process to view different internal structures within the body of the patient. Also, the physician may rotate the rotating endoscope shaft **220** via the rotation control wheel **226** during the imaging process to view the original internal structure from a different perspective.

[**0045**] Thus the present invention provides an improved transesophageal ultrasound probe that provides greater and easier access to images of internal structures within a patient because the probe includes a rotating shaft that rotates independently of the probe's control handle. The independent rotation of the rotating shaft provides greater imaging access. Further, the transesophageal ultrasound probe having a rotating endoscope shaft facilitates more intuitive images of internal structures from various angles and perspectives. Additionally, various other imaging methods, such as live video, may be used with the present invention. Also, the present invention is not limited to imaging. For example, the present invention may also be utilized in surgical applications such as trans-rectal prostate treatment.

[**0046**] While particular elements, embodiments and applications of the present invention have been shown and described, it is understood that the invention is not limited thereto since modifications may be made by those skilled in the art, particularly in light of the foregoing teaching. It is therefore contemplated by the appended claims to cover such modifications and incorporate those features which come within the spirit and scope of the invention.

1. An internal imaging probe including: a rotating shaft having an imaging element and a rotation control; and a control handle,

said rotation control for rotating said imaging element relative to said control handle.

2. The probe of claim 1 wherein said probe is a transesophageal echocardiography probe.

3. The probe of claim 1 wherein said rotation control includes a rotation control wheel.

4. The probe of claim 1 further including:

a rotating tube extending through said rotating shaft into said control handle; and

a rotation control wheel, wherein said rotation control wheel is fastened to said rotating tube.

5. The probe of claim 4 further including at least one washer located between said rotating tube and said control handle for decreasing friction between said rotating tube and said control handle.

6. The probe of claim 4 further including at least one O-ring forming a seal between said rotating tube and said control handle.

7. The probe of claim 1 further including:

a fixed endoscope shaft;

a rotating shaft;

a motor fixed to said fixed endoscope shaft;

a driving cog wheel attached to said motor; and

a driven cog wheel attached to said rotating shaft,

said driving cog wheel operatively engaging said driven cog wheel to rotate said rotating shaft relative to said control handle.

8. The probe of claim 7 further including a bearing for decreasing the friction between said fixed endoscope shaft and said rotating shaft.

9. The probe of claim 7 further including an O-ring forming a seal between said rotating shaft and said fixed endoscope shaft.

10. The probe of claim 1 wherein said imaging element is a transducer.

11. The probe of claim 1 wherein said control handle includes imaging controls for controlling said imaging element.

12. The probe of claim 1 further including a braking mechanism, wherein said braking mechanism may lock said rotating shaft into a rotated position.

13. A medical imaging system including a probe for imaging internal structures of a patient, said probe including:

a rotating shaft having an imaging element and a rotation control; and

a control handle, said rotation control for rotating said imaging element relative to said control handle.

14. The system of claim 13 wherein said probe is a transesophageal echocardiography probe.

15. The system of claim 13 wherein said rotation control includes a rotation control wheel.

16. The system of claim 13 further including:

a rotating tube extending through said rotating shaft into said control handle; and

a rotation control wheel, wherein said rotation control wheel is fastened to said rotating tube.

17. The system of claim 16 further including at least one washer located between said rotating tube and said control handle for decreasing friction between said rotating tube and said control handle.

18. The system of claim 16 further including an O-ring forming a seal between said rotating tube and said control handle.

19. The system of claim 13 further including:

a fixed endoscope shaft;

a rotating endoscope shaft;

a motor fixed to said fixed endscope shaft;

a driving cog wheel attached to said motor; and

a driven cog wheel attached to said rotating shaft,

said driving cog wheel operatively engaging said driven cog wheel to rotate said rotating shaft relative to said fixed endoscope shaft.

20. The system of claim 19 further including a bearing for decreasing the friction between said control handle and said fixed endoscope shaft.

21. The system of claim 19 further including an O-ring forming a seal between said rotating shaft and said fixed endoscope shaft.

22. The system of claim 13 wherein said imaging element is a transducer.

23. The system of claim 13 wherein said control handle includes imaging controls for controlling said imaging element.

24. The system of claim 13 wherein said rotating shaft may be locked in a pre-configured rotated position.

25. A system for imaging internal structures of a patient including an internal imaging probe including:

a rotating shaft having an imaging element and a rotation control;

a control handle connected to said rotating shaft, said rotation control located at the distal end of said control handle, and said rotation control operable to rotate said imaging element relative to said control handle.

26. The system of claim 25 wherein said probe is a transesophageal echocardiography probe.

27. The system of claim 25 further including at least one washer located between said rotating tube and said control handle for decreasing the friction between said rotating tube and said control handle.

28. The system of claim 25 further including an O-ring forming a seal between said rotating tube and said control handle.

29. The system of claim 25 wherein said imaging element is a transducer.

30. The system of claim 25 wherein said control handle includes imaging controls for controlling said imaging element.

31. The system of claim 25 further including a braking mechanism, said braking mechanism including:

a brake;

a brake handle threadably fastened to said brake; and

a brake limit restricting said brake handle, said brake handle rotating to linearly move said brake towards said rotation control.

32. The system of claim 25 further including a braking mechanism having a screw, said braking mechanism threading said screw into a rotation tube of said rotating shaft to restrict the rotation of said rotating shaft.

33. An internal imaging system including:

a rotating shaft having an imaging element;

a fixed endoscope shaft;

a motor fixed to said fixed endscope shaft;

a driving cog wheel attached to said motor; and

a driven cog wheel attached to said rotating shaft, said driving cog wheel operatively engaging said driven cog wheel to rotate said rotating shaft relative to said fixed endoscope shaft.

34. The system of claim 33 further including a bearing located between said fixed endoscope shaft and said rotating shaft for decreasing the friction between said fixed endoscope shaft and said rotating shaft.

35. The system of claim 33 further including an O-ring forming a seal between said rotating shaft and said control handle.

36. The system of claim 33 wherein said imaging element is a transducer.

37. The system of claim 33 wherein said control handle includes imaging controls for controlling said imaging element.

38. In a probe including a control handle and an imaging element, a method for positioning the imaging element of said probe relative to said control handle including the step of rotating said imaging element relative to said control handle.

39. The method of claim 38 further including the step of imaging an internal structure via said imaging element.

40. The method of claim 38 wherein said rotating step includes rotating said imaging element to image an internal structure from a different perspective.

41. The method of claim 38 wherein said rotating step includes rotating said imaging element to image a different internal structure.

42. The method of claim 38 wherein said rotating step includes rotating said imaging element relative to said control handle for optimal comfort.

43. The method of claim 38 wherein said rotating step includes the step of rotating an imaging element located on a distal end of a rotating endoscope shaft relative to said control handle.

44. The method of claim 43 further including the step of rotating said rotating endoscope shaft via a rotation control.

45. The method of claim 38 wherein said rotating step includes rotating said imaging element automatically via a motor attached to said control handle.

* * * * *

专利名称(译)	经食管超声探头具有旋转内窥镜轴		
公开(公告)号	US20030092997A1	公开(公告)日	2003-05-15
申请号	US10/317158	申请日	2002-12-10
[标]申请(专利权)人(译)	EDWARDSEN STEPHEN DODGE JORDFALD DAG		
申请(专利权)人(译)	EDWARDSEN STEPHEN DODGE JORDFALD DAG		
当前申请(专利权)人(译)	通用电气医疗系统全球性技术公司，有限责任公司		
[标]发明人	EDWARDSEN STEPHEN DODGE JORDFALD DAG		
发明人	EDWARDSEN, STEPHEN DODGE JORDFALD, DAG		
IPC分类号	A61B8/12 A61B6/00		
CPC分类号	A61B1/00177 A61B1/00183 A61B8/4461 A61B8/12 A61B1/273		
其他公开文献	US6749572		
外部链接	Espacenet USPTO		

摘要(译)
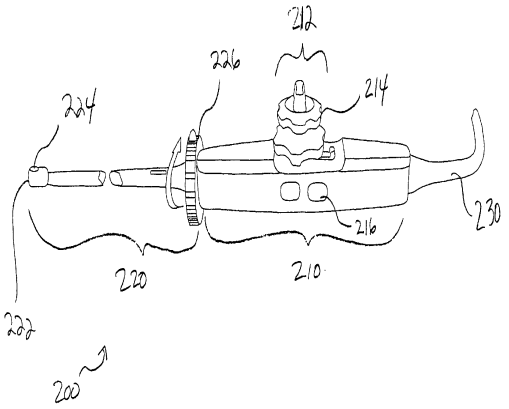
提供经食道超声探头，用于通过位于旋转内窥镜轴的远端上的成像元件对内部结构成像。探针包括旋转内窥镜，该旋转内窥镜具有安装在旋转内窥镜轴的远端上的成像元件，例如换能器。探针还包括用于控制成像控制的控制手柄和延伸通过旋转内窥镜轴并进入控制手柄的旋转管。旋转轴相对于控制手柄旋转并且独立于控制手柄旋转。优选地，旋转轴通过位于控制手柄远端的旋转控制轮旋转。旋转控制轮固定或结合到旋转管上，从而引起控制轮的手动旋转旋转管旋转，因此旋转轴旋转。因为旋转内窥镜轴旋转，位于旋转轴上或旋转轴内的成像元件也旋转。旋转轴也可以设置在锁定位置，使得旋转轴可以配置或预设为各种旋转位置。或者，旋转内窥镜轴的旋转可以是完全自动化的。通过包括固定在轴的固定部分上的电动机或控制手柄。电动机还包括驱动嵌齿轮或齿轮系统，其可操作地接合连接到轴的旋转部分的从动齿轮或齿轮系统。然后可以通过杠杆，电位计或位于控制器上的其他这样的装置来控制旋转轴的旋转处理。