US 20190320900A1

(19) United States

(12) Patent Application Publication

(10) Pub. No.: US 2019/0320900 A1

(43) Pub. Date: Oct. 24, 2019

Majmudar

(54) TELEMEDICINE SYSTEM

(71) Applicant: **CureCompanion Inc.**, North Brunswick, NJ (US)

(72) Inventor: **Mukul Majmudar**, Piscataway, NJ (US)

(21) Appl. No.: **15/956,199**

(22) Filed: **Apr. 18, 2018**

Publication Classification

(51) **Int. Cl.**
A61B 5/00 (2006.01)
G16H 40/67 (2006.01)

(52) **U.S. Cl.**
CPC ***A61B 5/0022*** (2013.01); *G16H 10/60* (2018.01); ***G16H 40/67*** (2018.01)

(57) **ABSTRACT**

Various example embodiments generally relate to a remote healthcare capability for supporting remote healthcare services for a patient by a healthcare professional. The remote healthcare capability may be provided within the context of a healthcare services system. The remote healthcare capability may enable a patient located remotely from a healthcare professional (e.g., at home, in a nursing home, in an emergency medical facility, in a rural location, or the like) to nevertheless receive healthcare services from the healthcare professional. The remote healthcare capability may include a telemedicine platform configured to support integration of telemedicine applications (e.g., a patient application for patients and a healthcare professional application for healthcare professionals) and telemedicine devices (e.g., an integrated patient care kit, such as a bag, a cart, or the like) in order to support various remote healthcare scenarios in which a patient located remotely from a healthcare professional is able to receive healthcare services from the healthcare professional.

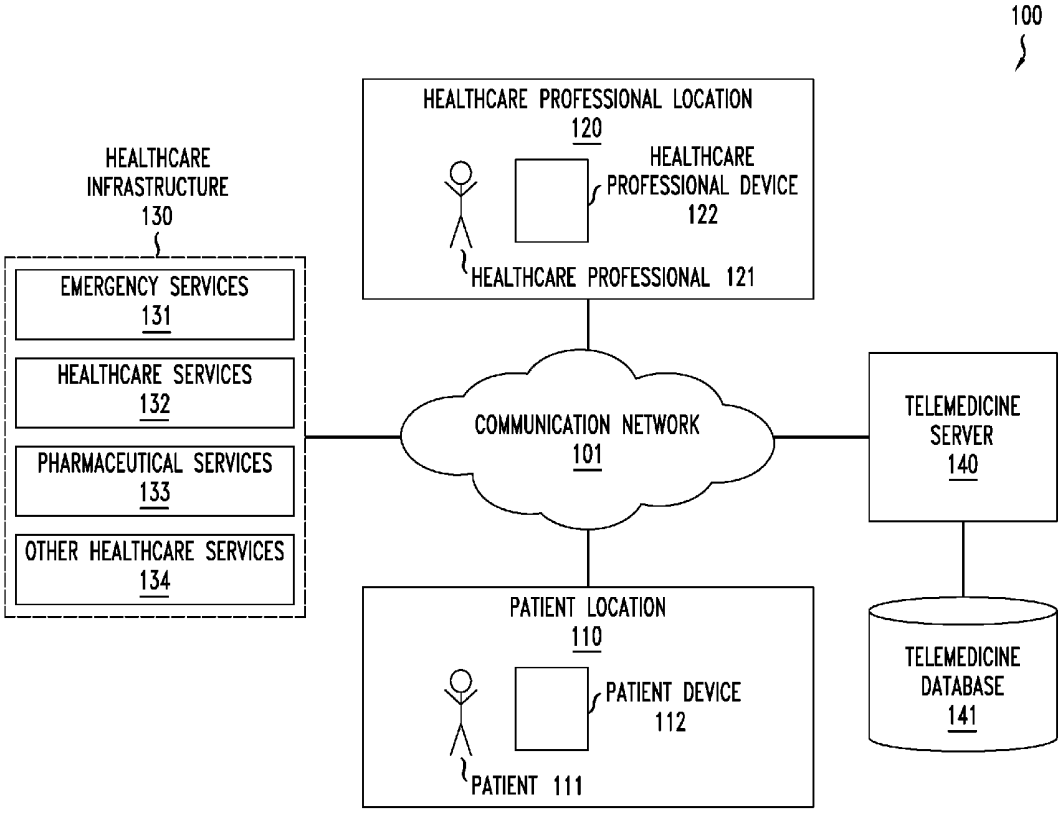

FIG. 1

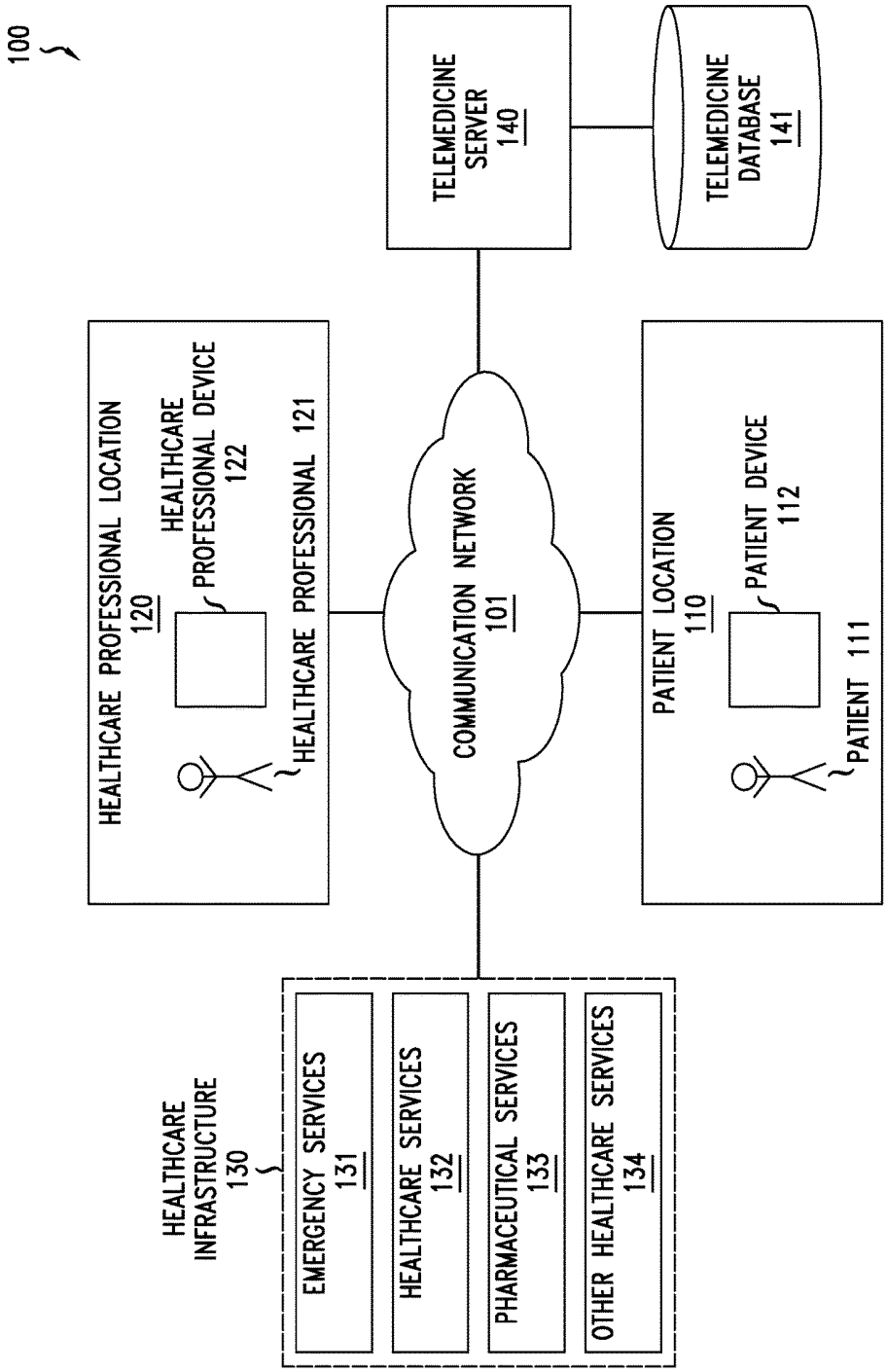
100
HEALTHCARE PROFESSIONAL LOCATION
120
HEALTHCARE PROFESSIONAL DEVICE
122
HEALTHCARE PROFESSIONAL 121
TELEMEDICINE SERVER
140
TELEMEDICINE DATABASE
141
COMMUNICATION NETWORK
101
PATIENT LOCATION
110
PATIENT DEVICE
112
PATIENT 111
HEALTHCARE INFRASTRUCTURE
130
EMERGENCY SERVICES
131
HEALTHCARE SERVICES
132
PHARMACEUTICAL SERVICES
133
OTHER HEALTHCARE SERVICES
134

FIG. 2

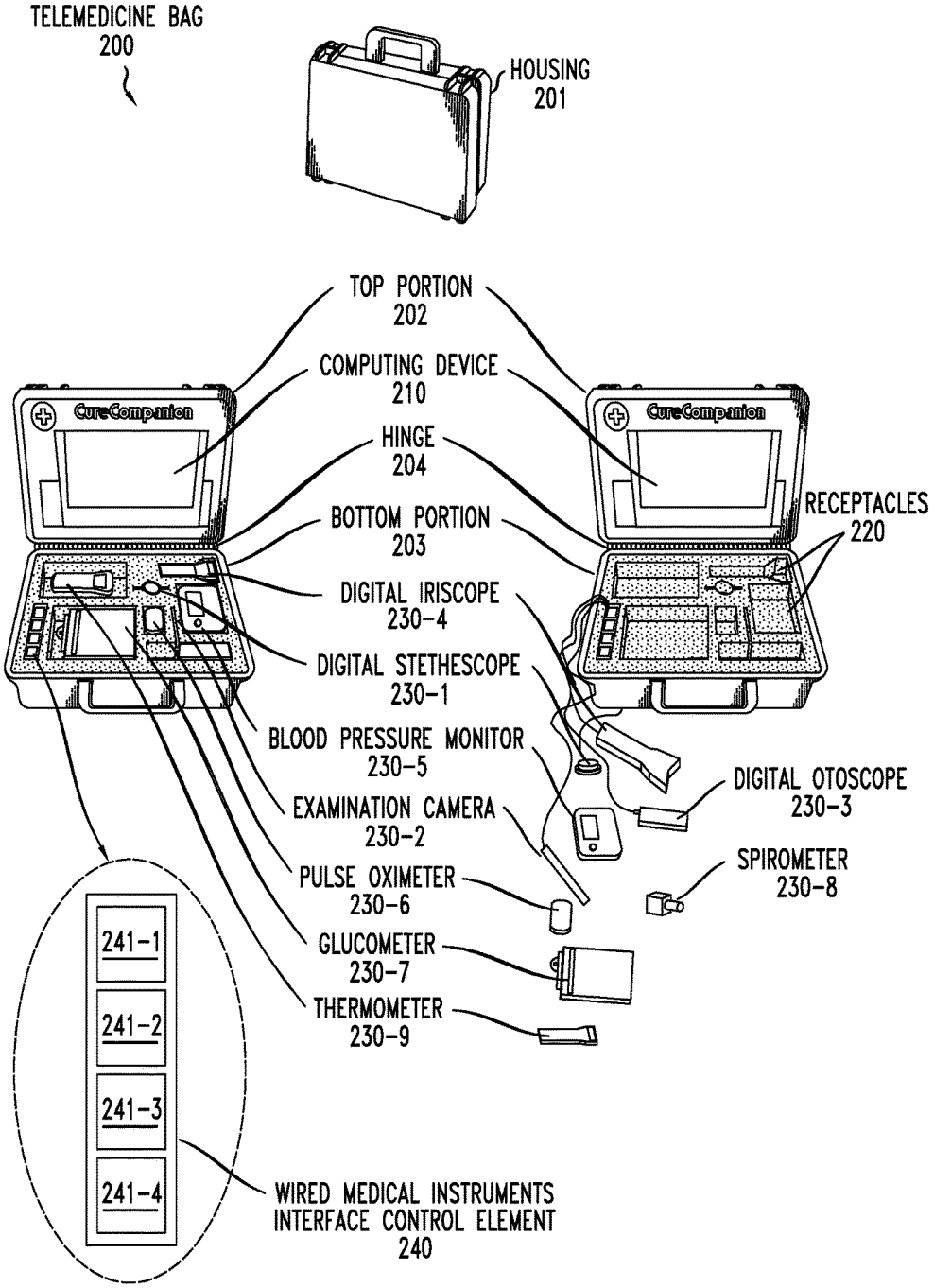
TELEMEDICINE BAG
200
HOUSING
201
TOP PORTION
202
COMPUTING DEVICE
210
HINGE
204
BOTTOM PORTION
203
DIGITAL IRISCOPE
230-4
DIGITAL STETHESCOPE
230-1
BLOOD PRESSURE MONITOR
230-5
EXAMINATION CAMERA
230-2
PULSE OXIMETER
230-6
GLUCOMETER
230-7
THERMOMETER
230-9
RECEPTACLES
220
DIGITAL OTOSCOPE
230-3
SPIROMETER
230-8
241-1
241-2
241-3
241-4
WIRED MEDICAL INSTRUMENTS
INTERFACE CONTROL ELEMENT
240

FIG. 3

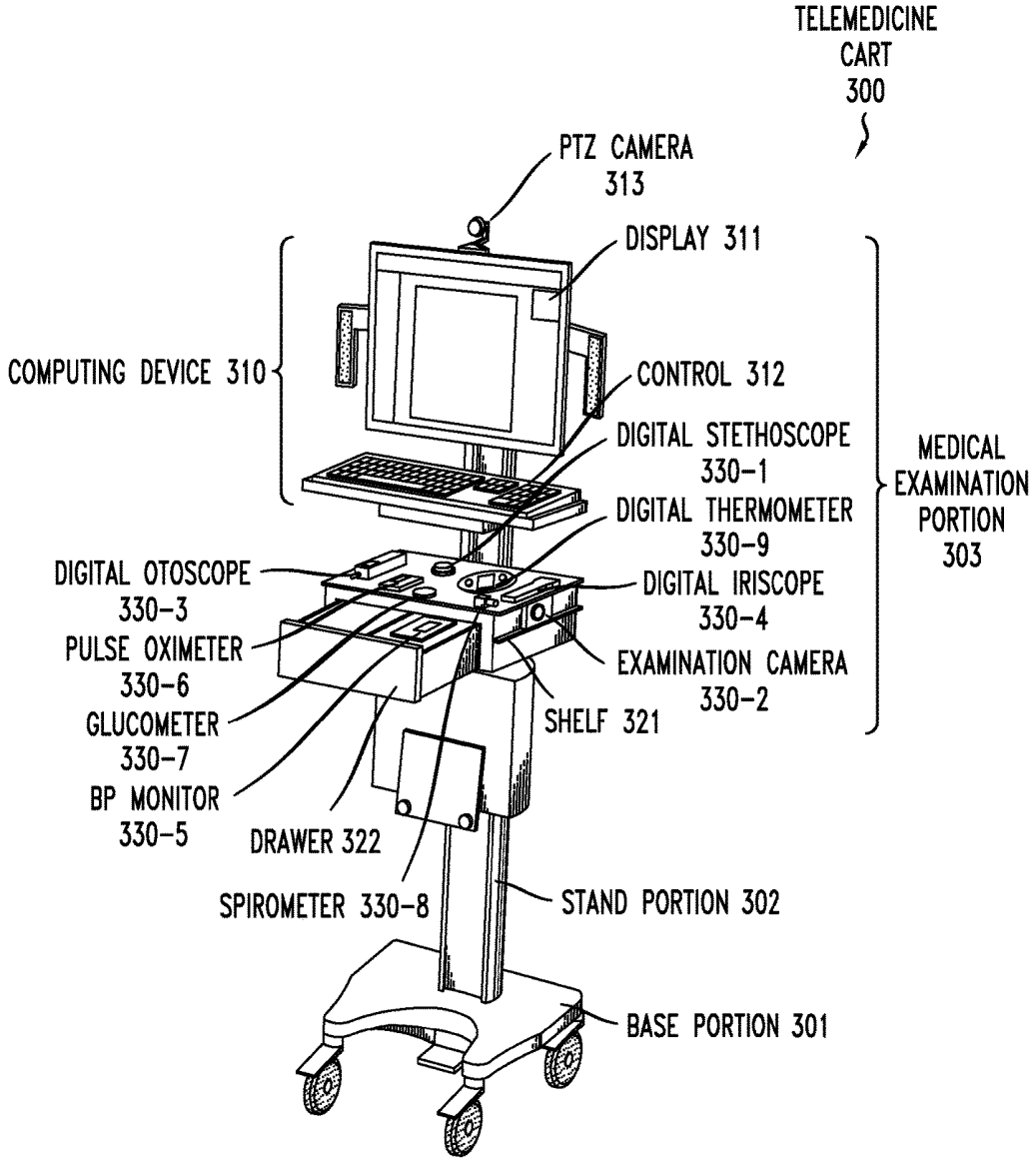
TELEMEDICINE
CART
300
PTZ CAMERA
313
DISPLAY 311
COMPUTING DEVICE 310
CONTROL 312
DIGITAL STETHOSCOPE
330-1
DIGITAL THERMOMETER
330-9
MEDICAL
EXAMINATION
PORTION
303
DIGITAL OTOSCOPE
330-3
DIGITAL IRISCOPE
330-4
PULSE OXIMETER
330-6
EXAMINATION CAMERA
330-2
GLUCOMETER
330-7
SHELF 321
BP MONITOR
330-5
DRAWER 322
SPIROMETER 330-8
STAND PORTION 302
BASE PORTION 301

FIG. 4

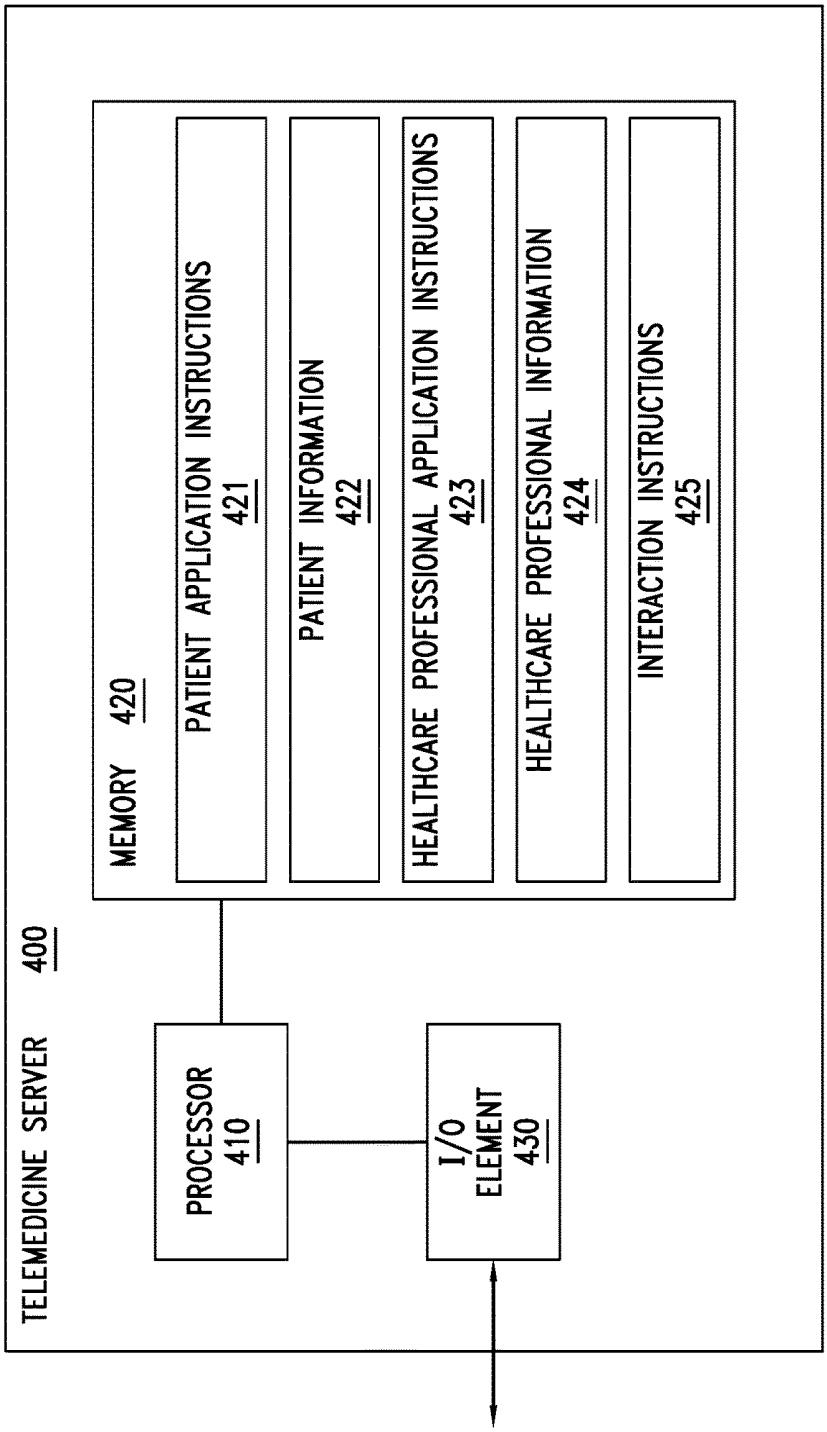
TELEMEDICINE SERVER 400
PROCESSOR 410
I/O ELEMENT 430
MEMORY 420
PATIENT APPLICATION INSTRUCTIONS 421
PATIENT INFORMATION 422
HEALTHCARE PROFESSIONAL APPLICATION INSTRUCTIONS 423
HEALTHCARE PROFESSIONAL INFORMATION 424
INTERACTION INSTRUCTIONS 425

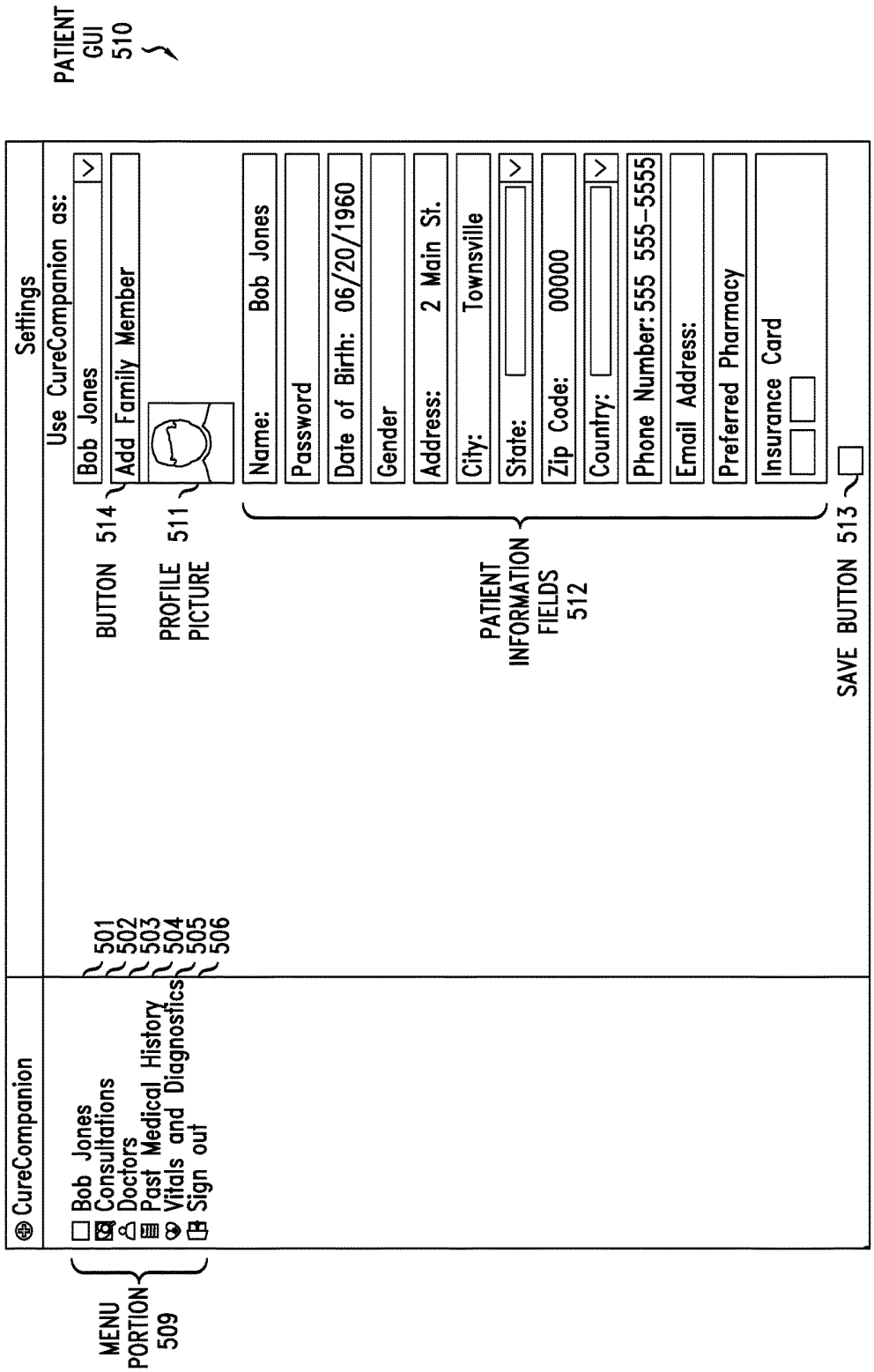
PATIENT GUI 510
CureCompanion
Settings
Use CureCompanion as:
Bob Jones
Add Family Member
BUTTON 514
PROFILE PICTURE 511
Name: Bob Jones
Password
Date of Birth: 06/20/1960
Gender
Address: 2 Main St.
City: Townsville
State:
Zip Code: 00000
Country:
Phone Number: 555 555-5555
Email Address:
Preferred Pharmacy
Insurance Card
PATIENT INFORMATION FIELDS 512
SAVE BUTTON 513
Bob Jones 501
Consultations 502
Doctors 503
Past Medical History 504
Vitals and Diagnostics 505
Sign out 506
MENU PORTION 509

FIG. 5A

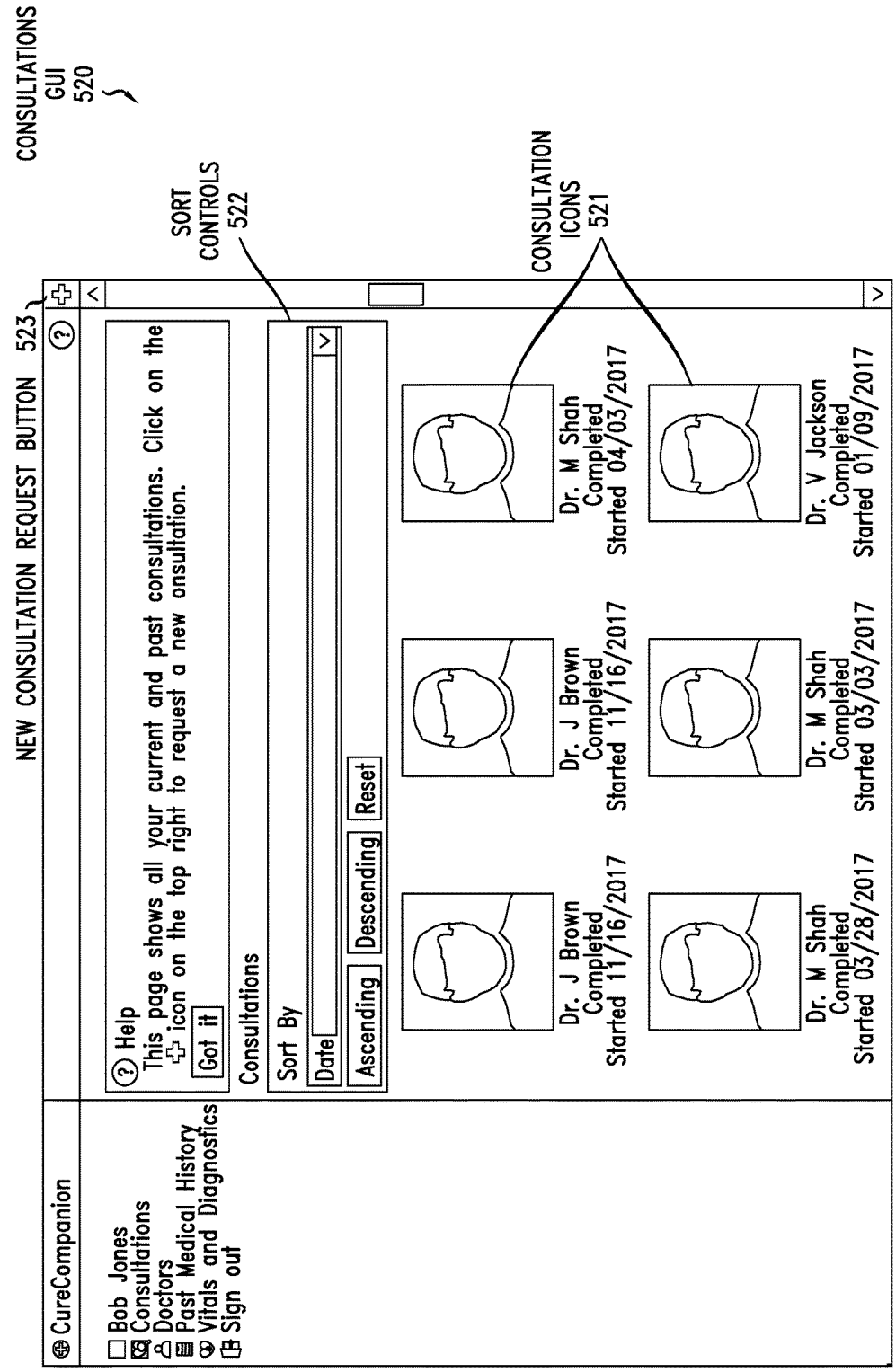
CONSULTATIONS GUI 520
SORT CONTROLS 522
CONSULTATION ICONS 521
NEW CONSULTATION REQUEST BUTTON 523
CureCompanion
Bob Jones
Consultations
Doctors
Past Medical History
Vitals and Diagnostics
Sign out
MENU PORTION 509
Help
This page shows all your current and past consultations. Click on the icon on the top right to request a new consultation.
Got it
Consultations
Sort By
Date
Ascending
Descending
Reset
Dr. J Brown Completed Started 11/16/2017
Dr. J Brown Completed Started 11/16/2017
Dr. M Shah Completed Started 03/28/2017
Dr. M Shah Completed Started 03/03/2017
Dr. M Shah Completed Started 04/03/2017
Dr. V Jackson Completed Started 01/09/2017

FIG. 5B

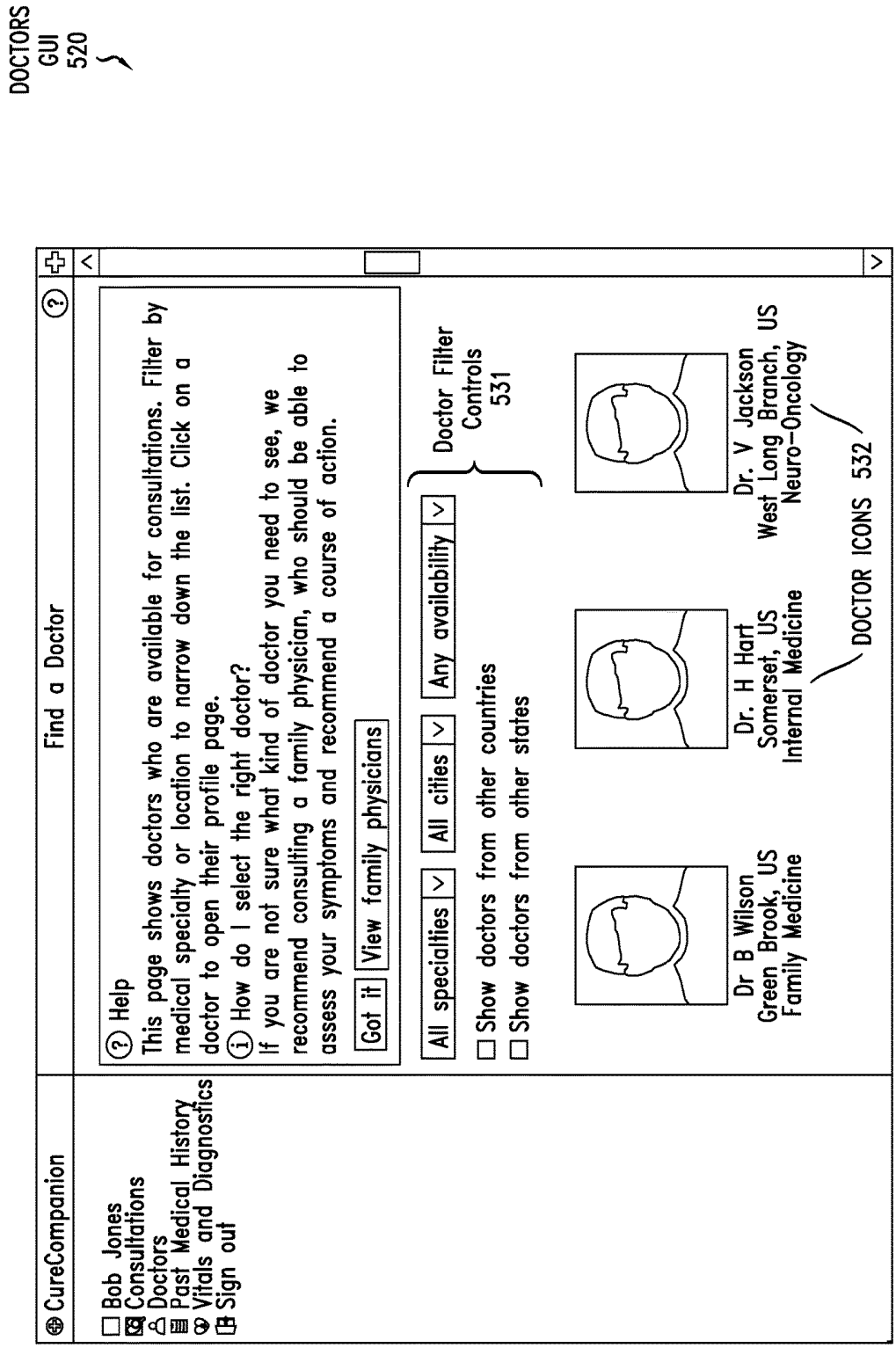
DOCTORS GUI 520
CureCompanion
Find a Doctor
Bob Jones
Consultations
Doctors
Past Medical History
Vitals and Diagnostics
Sign out
MENU PORTION 509
Help
This page shows doctors who are available for consultations. Filter by medical specialty or location to narrow down the list. Click on a doctor to open their profile page.
How do I select the right doctor?
If you are not sure what kind of doctor you need to see, we recommend consulting a family physician, who should be able to assess your symptoms and recommend a course of action.
Got it
View family physicians
All specialties
All cities
Any availability
Show doctors from other countries
Show doctors from other states
Doctor Filter Controls 531
Dr B Wilson
Green Brook, US
Family Medicine
Dr. H Hart
Somerset, US
Internal Medicine
Dr. V Jackson
West Long Branch, US
Neuro-Oncology
DOCTOR ICONS 532

FIG. 5C

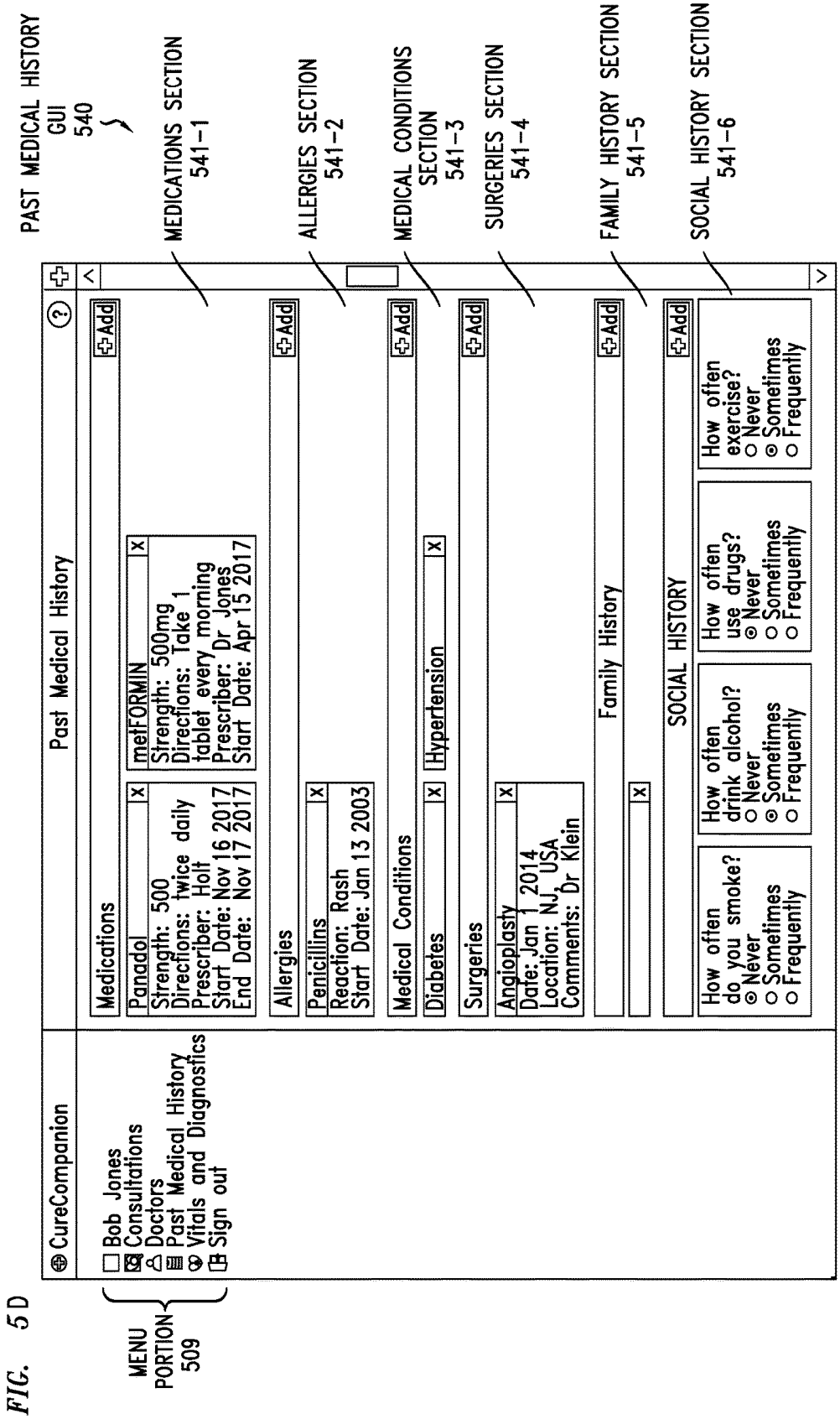
PAST MEDICAL HISTORY GUI 540
MEDICATIONS SECTION 541-1
ALLERGIES SECTION 541-2
MEDICAL CONDITIONS SECTION 541-3
SURGERIES SECTION 541-4
FAMILY HISTORY SECTION 541-5
SOCIAL HISTORY SECTION 541-6
CureCompanion
Bob Jones
Consultations
Doctors
Past Medical History
Vitals and Diagnostics
Sign out
Past Medical History
Medications
Add
Panadol
Strength: 500
Directions: twice daily
Prescriber: Holt
Start Date: Nov 16 2017
End Date: Nov 17 2017
metFORMIN
Strength: 500mg
Directions: Take 1 tablet every morning
Prescriber: Dr Jones
Start Date: Apr 15 2017
Allergies
Penicillins
Reaction: Rash
Start Date: Jan 13 2003
Medical Conditions
Diabetes
Hypertension
Surgeries
Angioplasty
Date: Jan 1 2014
Location: NJ, USA
Comments: Dr Klein
Family History
SOCIAL HISTORY
How often do you smoke?
Never
Sometimes
Frequently
How often drink alcohol?
Never
Sometimes
Frequently
How often use drugs?
Never
Sometimes
Frequently
How often exercise?
Never
Sometimes
Frequently
MENU PORTION 509

FIG. 5D

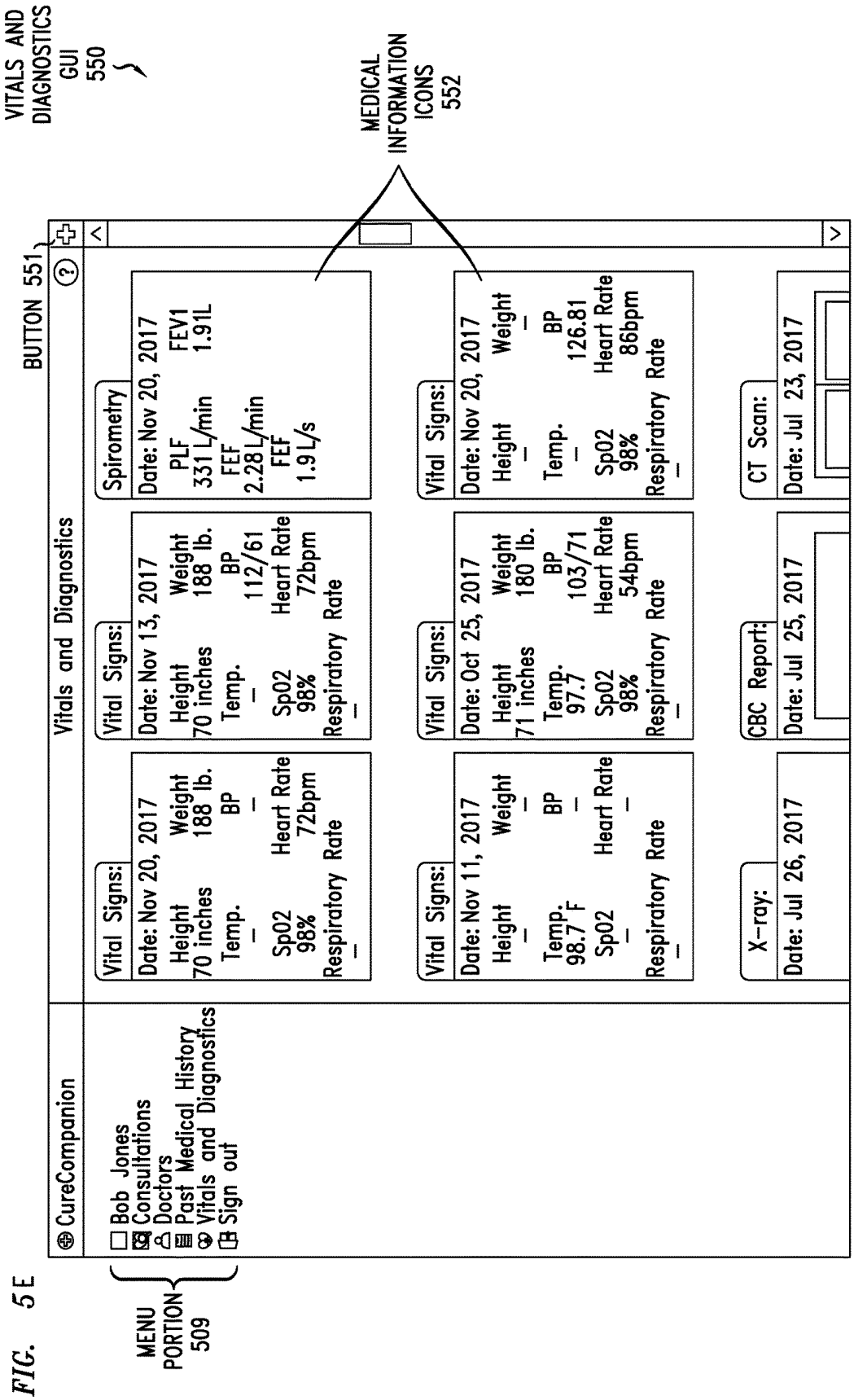
VITALS AND DIAGNOSTICS GUI 550
MEDICAL INFORMATION ICONS 552
BUTTON 551
CureCompanion
Vitals and Diagnostics
Bob Jones
Consultations
Doctors
Past Medical History
Vitals and Diagnostics
Sign out
MENU PORTION 509
Vital Signs:
Date: Nov 20, 2017
Height 70 inches
Weight 188 lb.
Temp. –
BP –
SpO2 98%
Heart Rate 72bpm
Respiratory Rate –
Vital Signs:
Date: Nov 13, 2017
Height 70 inches
Weight 188 lb.
Temp. –
BP 112/61
SpO2 98%
Heart Rate 72bpm
Respiratory Rate –
Spirometry
Date: Nov 20, 2017
PLF 331 L/min
FEV1 1.91L
FEF 2.28 L/min
FEF 1.9 L/s
Vital Signs:
Date: Nov 11, 2017
Height –
Weight –
Temp. 98.7 F
BP –
SpO2 –
Heart Rate –
Respiratory Rate –
Vital Signs:
Date: Oct 25, 2017
Height 71 inches
Weight 180 lb.
Temp. 97.7
BP 103/71
SpO2 98%
Heart Rate 54bpm
Respiratory Rate –
Vital Signs:
Date: Nov 20, 2017
Height –
Weight –
Temp. –
BP 126.81
SpO2 98%
Heart Rate 86bpm
Respiratory Rate –
X-ray:
Date: Jul 26, 2017
CBC Report:
Date: Jul 25, 2017
CT Scan:
Date: Jul 23, 2017

FIG. 5E

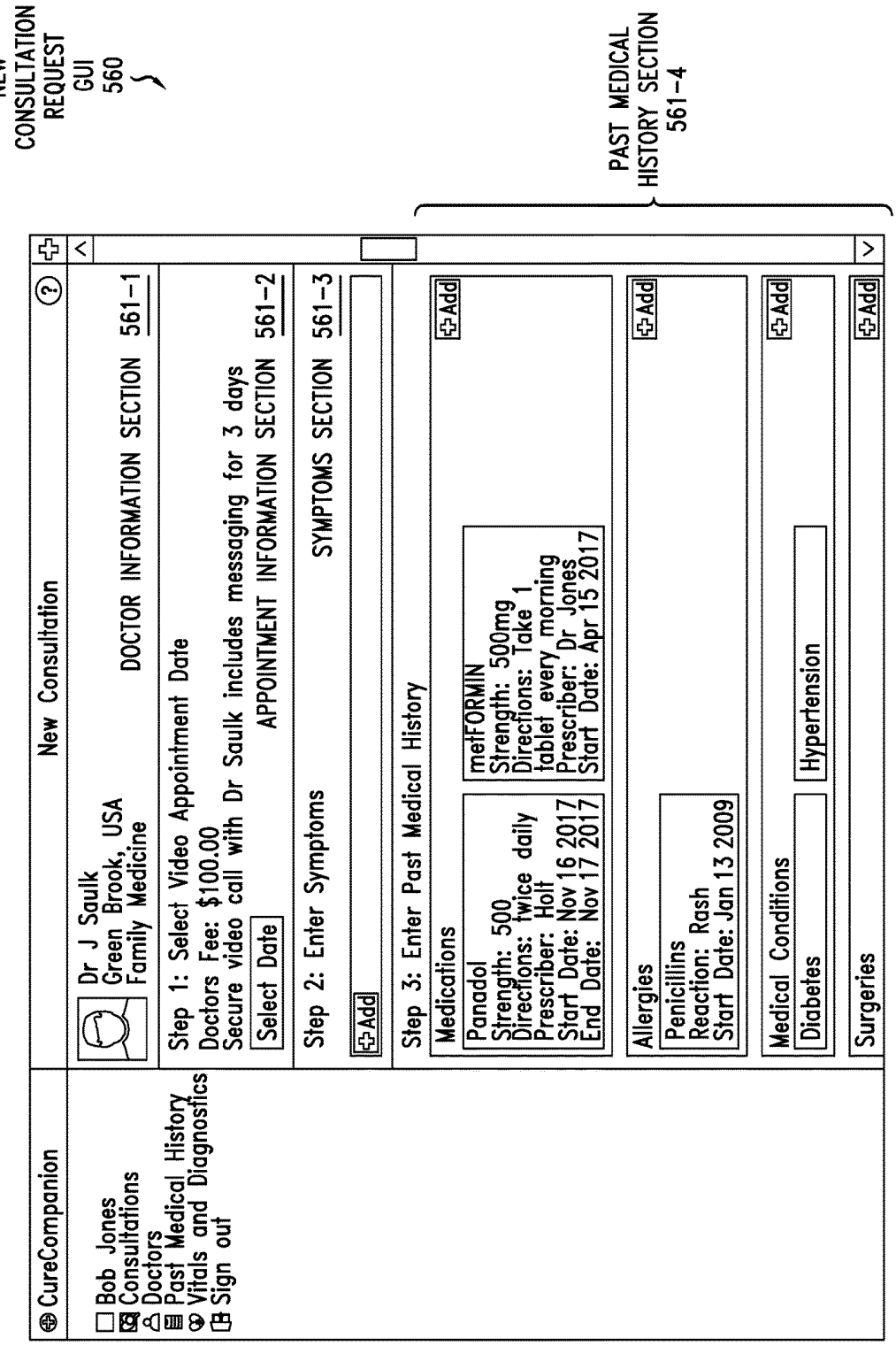
NEW CONSULTATION REQUEST GUI 560
PAST MEDICAL HISTORY SECTION 561-4
CureCompanion
Bob Jones
Consultations
Doctors
Past Medical History
Vitals and Diagnostics
Sign out
New Consultation
Dr J Saulk
Green Brook, USA
Family Medicine
DOCTOR INFORMATION SECTION 561-1
Step 1: Select Video Appointment Date
Doctors Fee: $100.00
Secure video call with Dr Saulk includes messaging for 3 days
Select Date
APPOINTMENT INFORMATION SECTION 561-2
Step 2: Enter Symptoms
SYMPTOMS SECTION 561-3
Add
Step 3: Enter Past Medical History
Medications
Add
Panadol
Strength: 500
Directions: Twice daily
Prescriber: Holt
Start Date: Nov 16 2017
End Date: Nov 17 2017
metFORMIN
Strength: 500mg
Directions: Take 1 tablet every morning
Prescriber: Dr Jones
Start Date: Apr 15 2017
Allergies
Add
Penicillins
Reaction: Rash
Start Date: Jan 13 2009
Medical Conditions
Add
Diabetes
Hypertension
Surgeries
Add

FIG. 5F

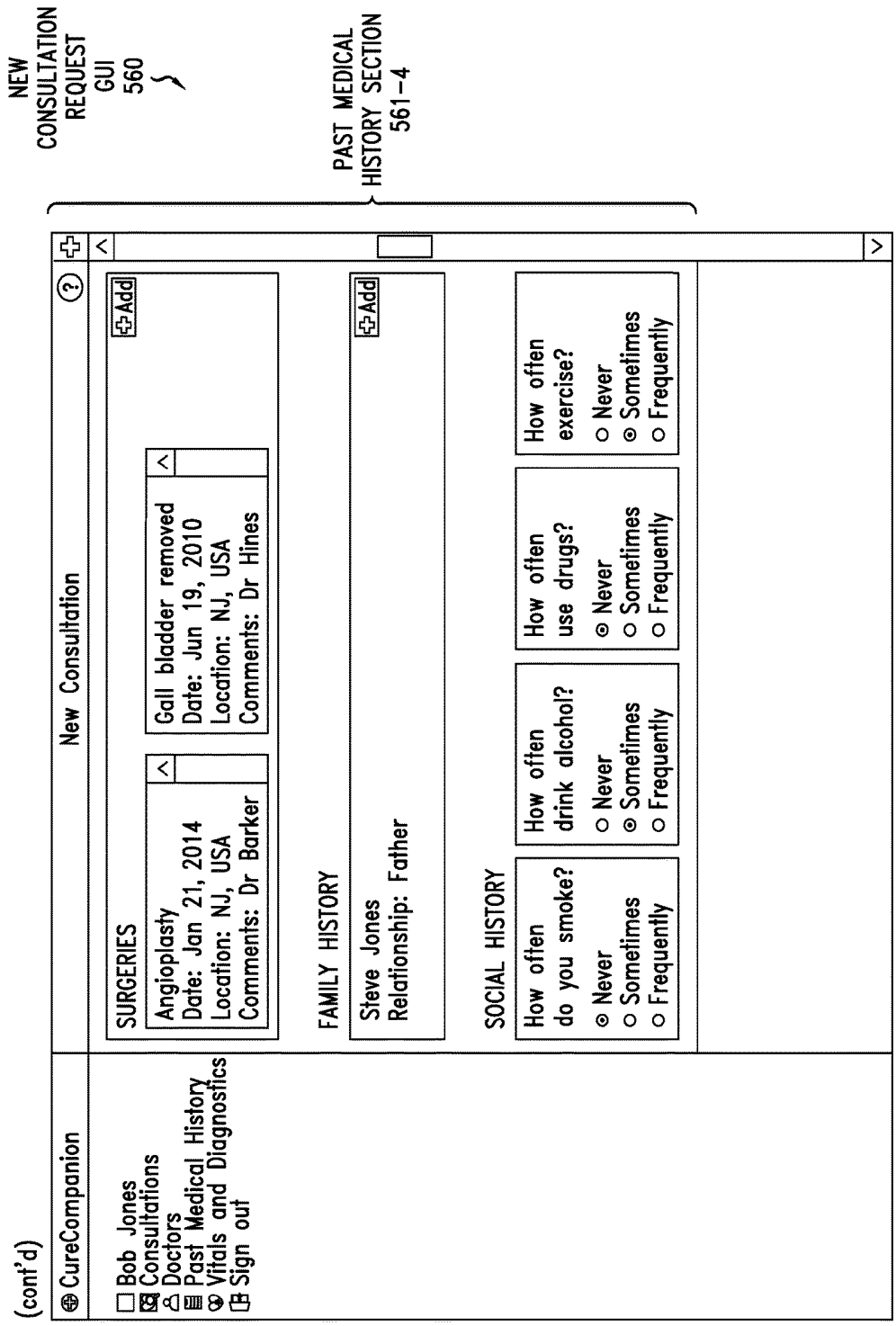
NEW CONSULTATION REQUEST GUI 560
PAST MEDICAL HISTORY SECTION 561-4
CureCompanion
Bob Jones
Consultations
Doctors
Past Medical History
Vitals and Diagnostics
Sign out
New Consultation
SURGERIES
Add
Angioplasty
Date: Jan 21, 2014
Location: NJ, USA
Comments: Dr Barker
Gall bladder removed
Date: Jun 19, 2010
Location: NJ, USA
Comments: Dr Hines
FAMILY HISTORY
Add
Steve Jones
Relationship: Father
SOCIAL HISTORY
How often do you smoke?
Never
Sometimes
Frequently
How often drink alcohol?
Never
Sometimes
Frequently
How often use drugs?
Never
Sometimes
Frequently
How often exercise?
Never
Sometimes
Frequently

FIG. 5F (cont'd)

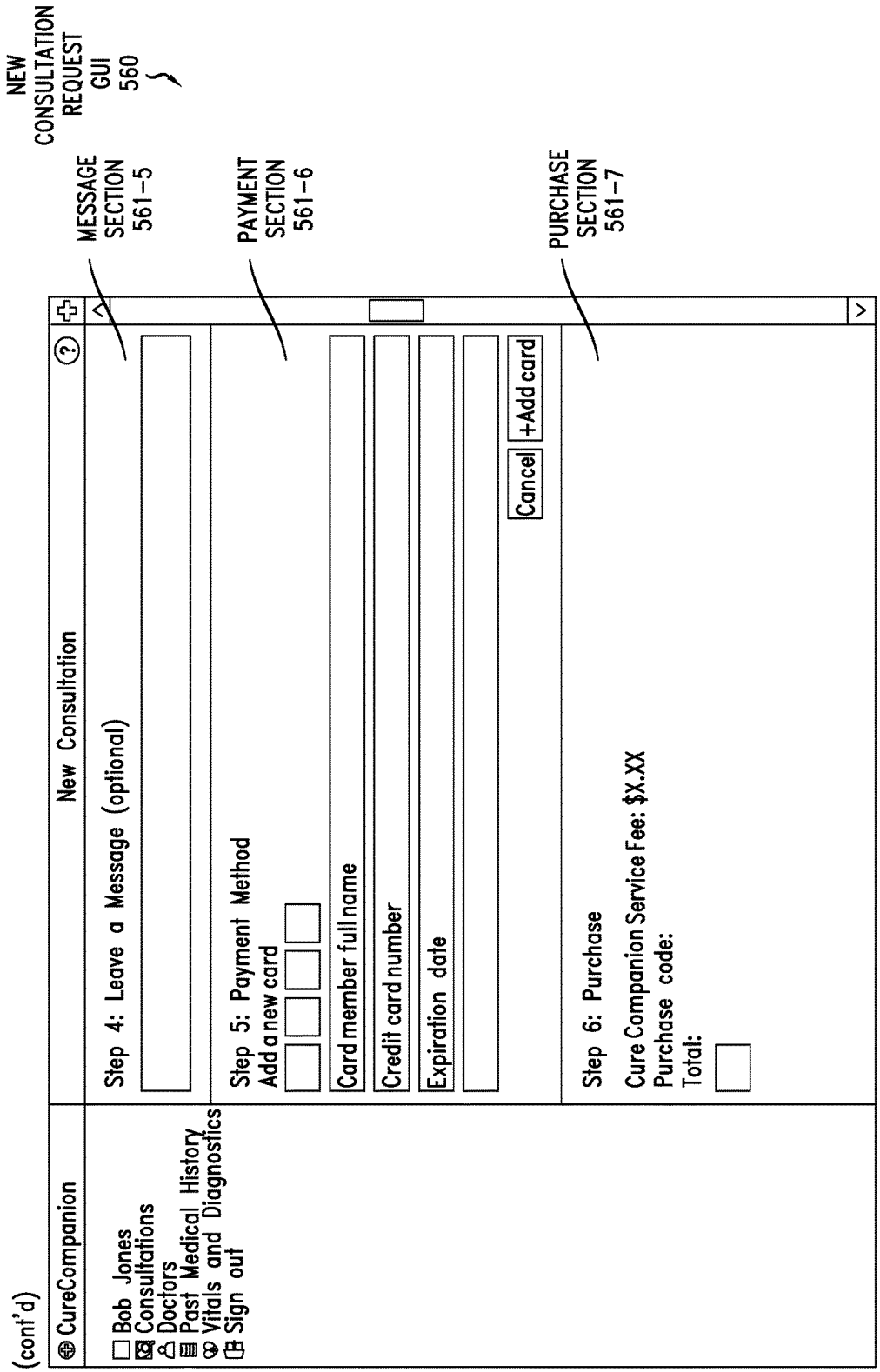
NEW CONSULTATION REQUEST GUI 560
MESSAGE SECTION 561-5
PAYMENT SECTION 561-6
PURCHASE SECTION 561-7
CureCompanion
Bob Jones
Consultations
Doctors
Past Medical History
Vitals and Diagnostics
Sign out
New Consultation
Step 4: Leave a Message (optional)
Step 5: Payment Method
Add a new card
Card member full name
Credit card number
Expiration date
Cancel
+Add card
Step 6: Purchase
Cure Companion Service Fee: $X.XX
Purchase code:
Total:

FIG. 5F (cont'd)

FIG. 6A

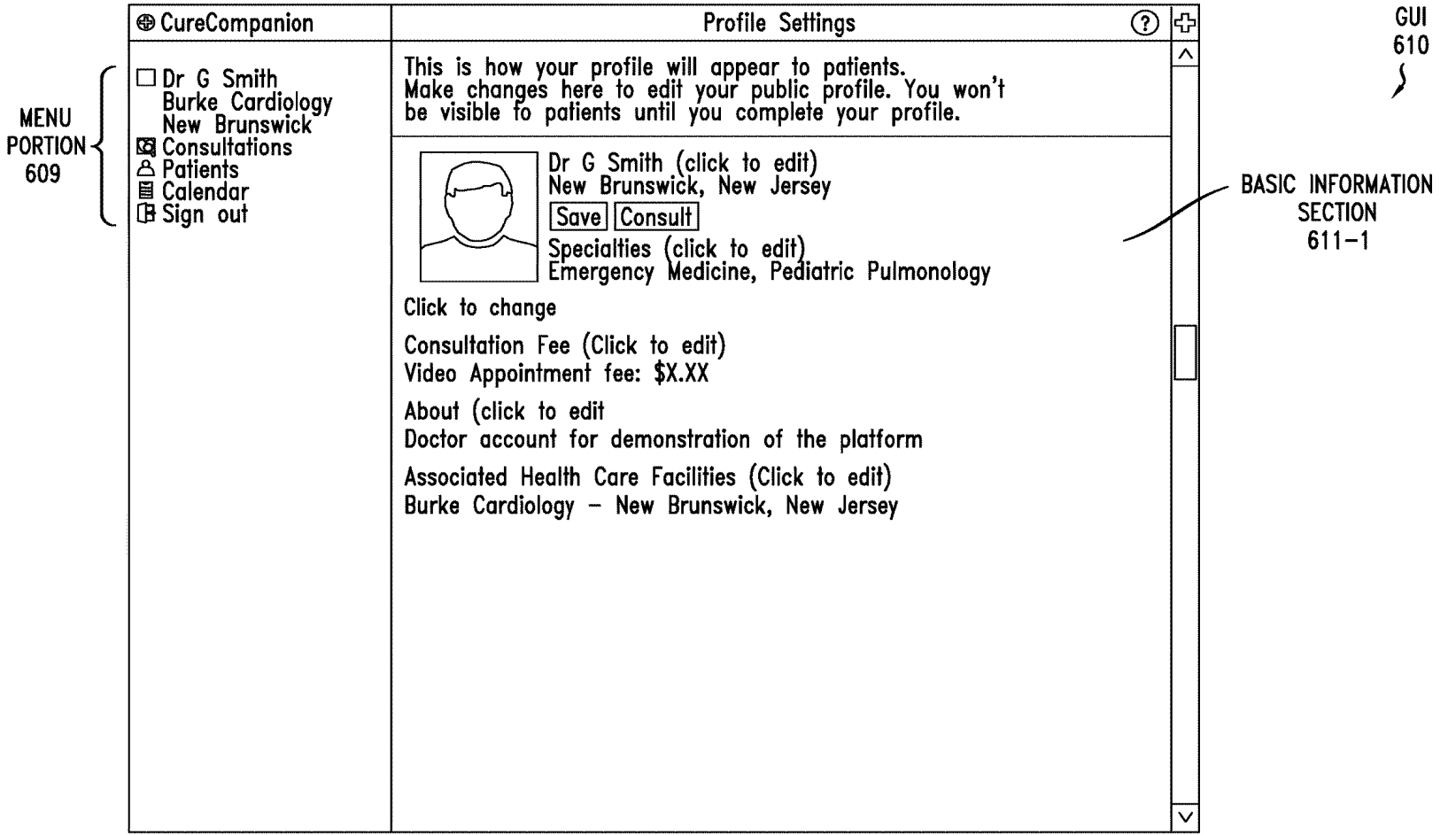
DOCTOR GUI 610
CureCompanion
Profile Settings
MENU PORTION 609
Dr G Smith
Burke Cardiology
New Brunswick
Consultations
Patients
Calendar
Sign out
This is how your profile will appear to patients.
Make changes here to edit your public profile. You won't be visible to patients until you complete your profile.
Dr G Smith (click to edit)
New Brunswick, New Jersey
Save
Consult
Specialties (click to edit)
Emergency Medicine, Pediatric Pulmonology
Click to change
Consultation Fee (Click to edit)
Video Appointment fee: $X.XX
About (click to edit
Doctor account for demonstration of the platform
Associated Health Care Facilities (Click to edit)
Burke Cardiology – New Brunswick, New Jersey
BASIC INFORMATION SECTION 611-1

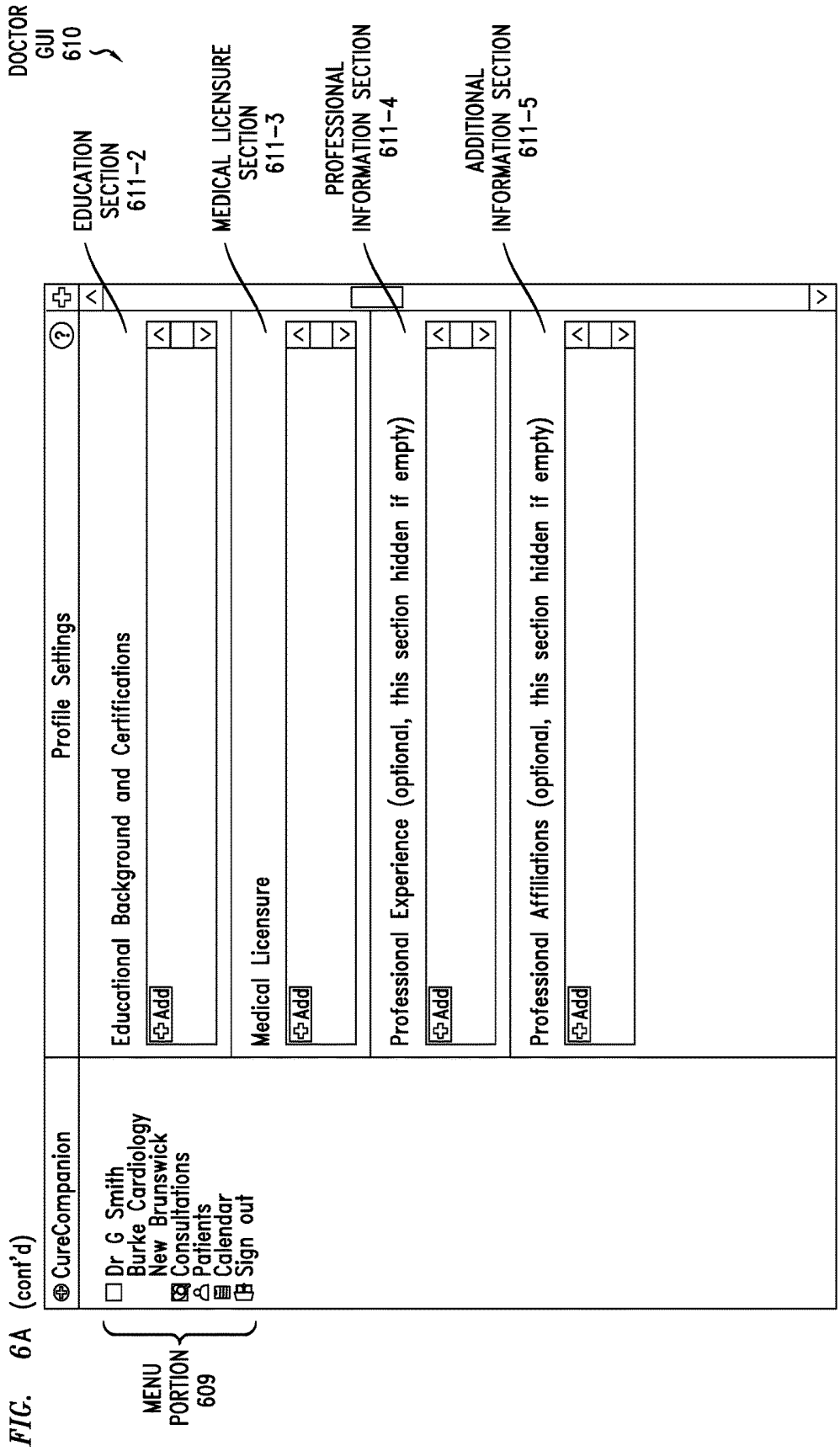
DOCTOR GUI 610
EDUCATION SECTION 611-2
MEDICAL LICENSURE SECTION 611-3
PROFESSIONAL INFORMATION SECTION 611-4
ADDITIONAL INFORMATION SECTION 611-5
CureCompanion
Profile Settings
Dr G Smith
Burke Cardiology
New Brunswick
Consultations
Patients
Calendar
Sign out
Educational Background and Certifications
Add
Medical Licensure
Add
Professional Experience (optional, this section hidden if empty)
Add
Professional Affiliations (optional, this section hidden if empty)
Add
MENU PORTION 609

FIG. 6A (cont'd)

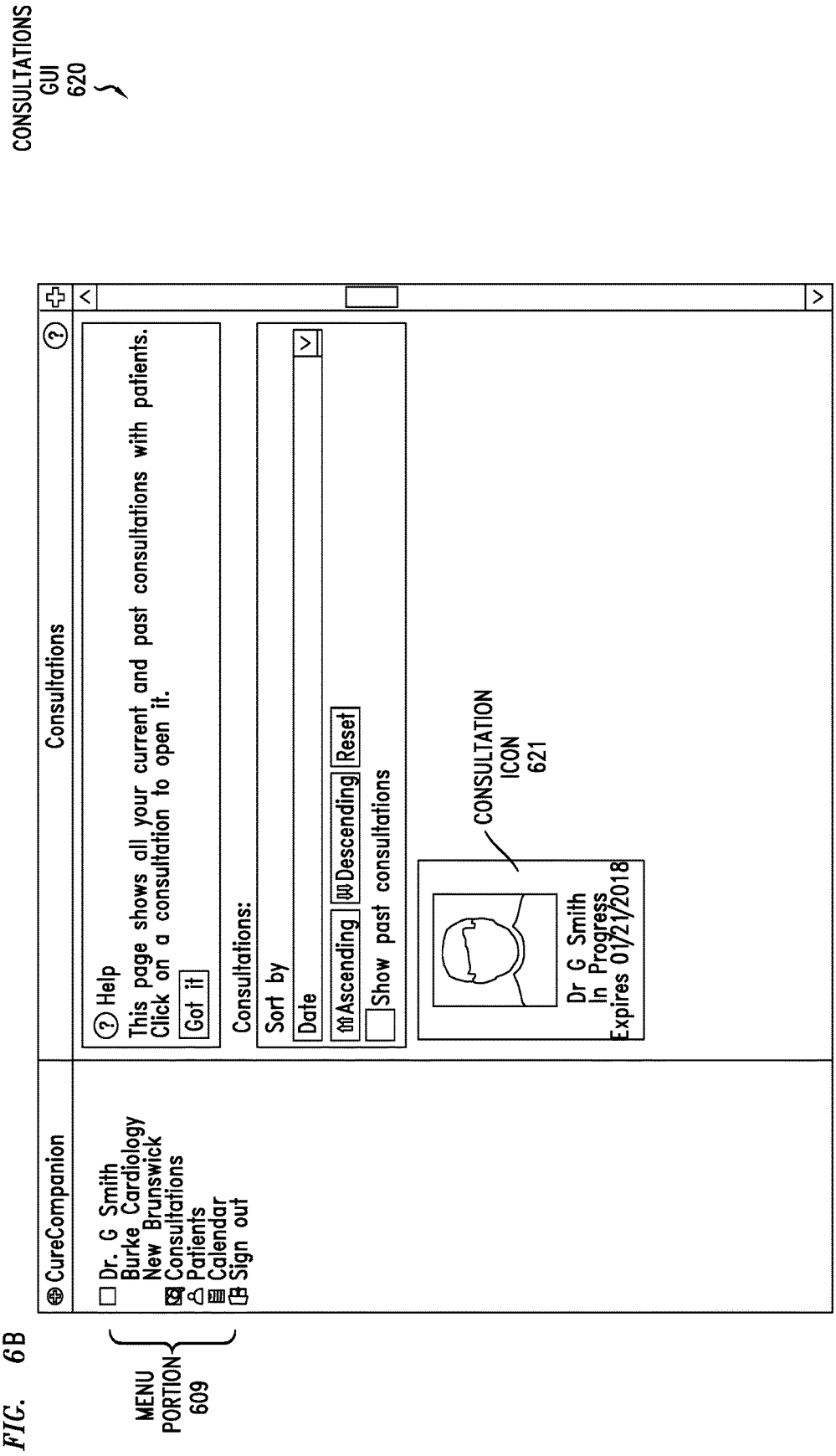
CONSULTATIONS GUI 620
CureCompanion
Consultations
Dr. G Smith
Burke Cardiology
New Brunswick
Consultations
Patients
Calendar
Sign out
MENU PORTION 609
Help
This page shows all your current and past consultations with patients.
Click on a consultation to open it.
Got it
Consultations:
Sort by
Date
Ascending
Descending
Reset
Show past consultations
CONSULTATION ICON 621
Dr G Smith
In Progress
Expires 01/21/2018

FIG. 6B

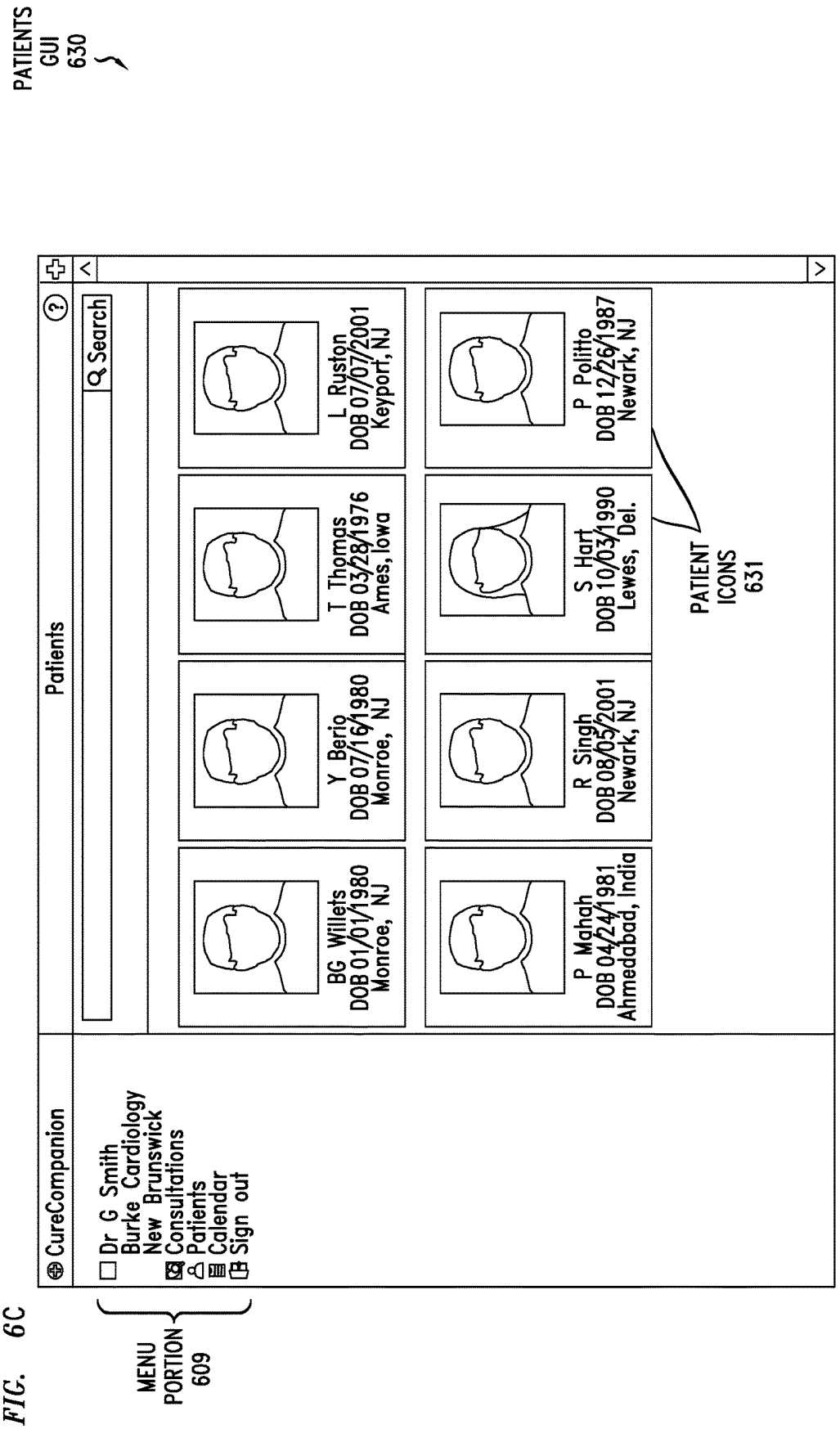
PATIENTS GUI 630
CureCompanion
Patients
Search
Dr G Smith
Burke Cardiology
New Brunswick
Consultations
Patients
Calendar
Sign out
MENU PORTION 609
BG Willets
DOB 01/01/1980
Monroe, NJ
Y Berio
DOB 07/16/1980
Monroe, NJ
T Thomas
DOB 03/28/1976
Ames, Iowa
L Ruston
DOB 07/07/2001
Keyport, NJ
P Mahah
DOB 04/24/1981
Ahmedabad, India
R Singh
DOB 08/05/2001
Newark, NJ
S Hart
DOB 10/03/1990
Lewes, Del.
P Politto
DOB 12/26/1987
Newark, NJ
PATIENT ICONS 631

FIG. 6C

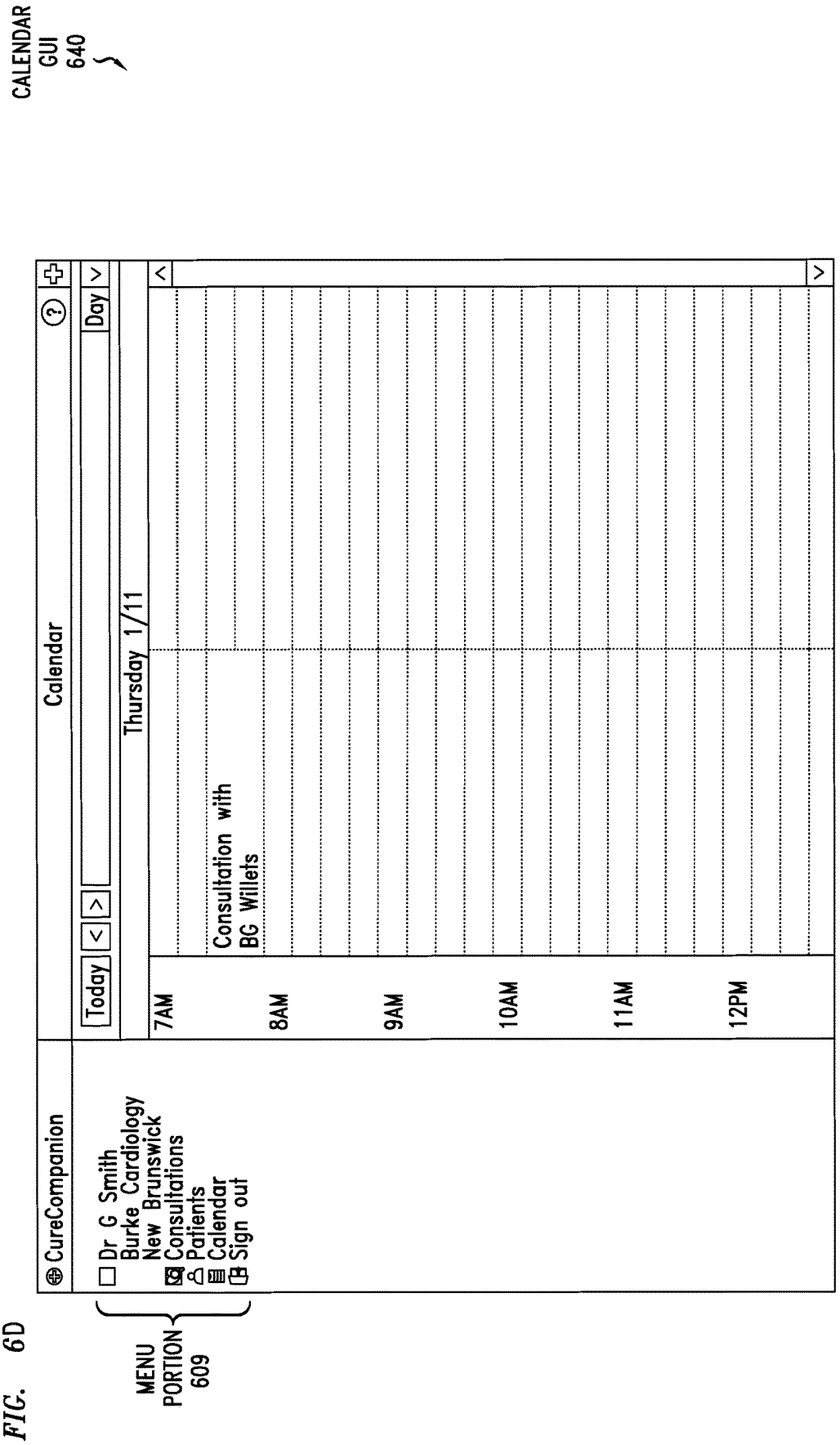
CALENDAR GUI 640
CureCompanion
Calendar
Today
Day
Dr G Smith
Burke Cardiology
New Brunswick
Consultations
Patients
Calendar
Sign out
MENU PORTION 609
Thursday 1/11
7AM
8AM
9AM
10AM
11AM
12PM
Consultation with
BG Willets

FIG. 6D

FIG. 7

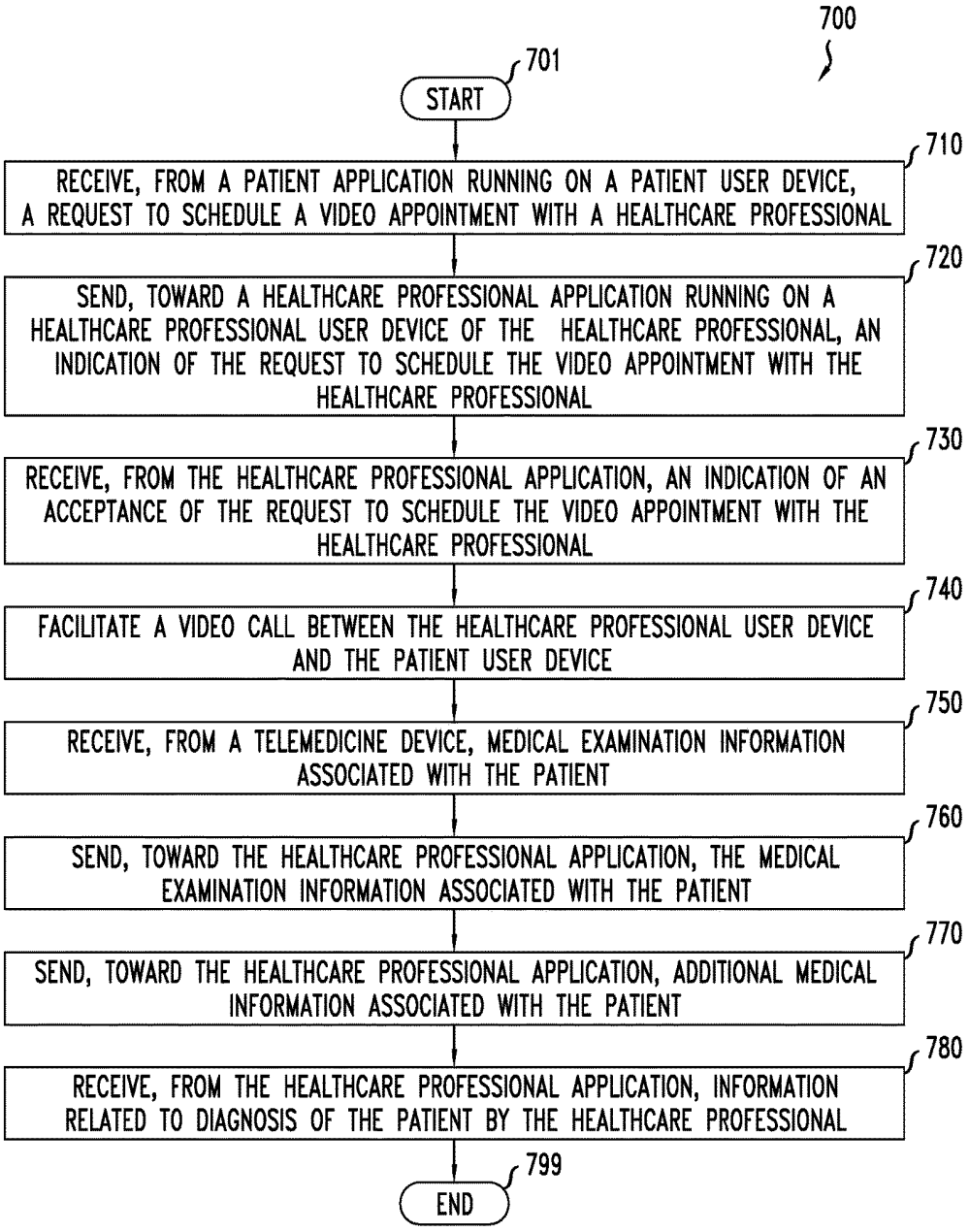
700
701
START
710
RECEIVE, FROM A PATIENT APPLICATION RUNNING ON A PATIENT USER DEVICE, A REQUEST TO SCHEDULE A VIDEO APPOINTMENT WITH A HEALTHCARE PROFESSIONAL
720
SEND, TOWARD A HEALTHCARE PROFESSIONAL APPLICATION RUNNING ON A HEALTHCARE PROFESSIONAL USER DEVICE OF THE HEALTHCARE PROFESSIONAL, AN INDICATION OF THE REQUEST TO SCHEDULE THE VIDEO APPOINTMENT WITH THE HEALTHCARE PROFESSIONAL
730
RECEIVE, FROM THE HEALTHCARE PROFESSIONAL APPLICATION, AN INDICATION OF AN ACCEPTANCE OF THE REQUEST TO SCHEDULE THE VIDEO APPOINTMENT WITH THE HEALTHCARE PROFESSIONAL
740
FACILITATE A VIDEO CALL BETWEEN THE HEALTHCARE PROFESSIONAL USER DEVICE AND THE PATIENT USER DEVICE
750
RECEIVE, FROM A TELEMEDICINE DEVICE, MEDICAL EXAMINATION INFORMATION ASSOCIATED WITH THE PATIENT
760
SEND, TOWARD THE HEALTHCARE PROFESSIONAL APPLICATION, THE MEDICAL EXAMINATION INFORMATION ASSOCIATED WITH THE PATIENT
770
SEND, TOWARD THE HEALTHCARE PROFESSIONAL APPLICATION, ADDITIONAL MEDICAL INFORMATION ASSOCIATED WITH THE PATIENT
780
RECEIVE, FROM THE HEALTHCARE PROFESSIONAL APPLICATION, INFORMATION RELATED TO DIAGNOSIS OF THE PATIENT BY THE HEALTHCARE PROFESSIONAL
799
END

FIG. 8

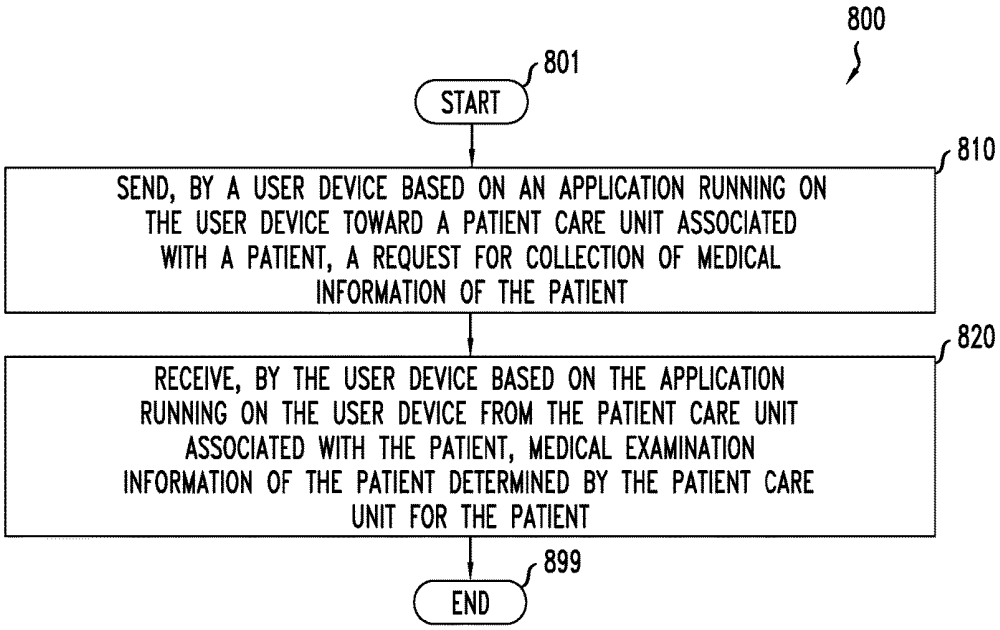
800
801
START
810
SEND, BY A USER DEVICE BASED ON AN APPLICATION RUNNING ON THE USER DEVICE TOWARD A PATIENT CARE UNIT ASSOCIATED WITH A PATIENT, A REQUEST FOR COLLECTION OF MEDICAL INFORMATION OF THE PATIENT
820
RECEIVE, BY THE USER DEVICE BASED ON THE APPLICATION RUNNING ON THE USER DEVICE FROM THE PATIENT CARE UNIT ASSOCIATED WITH THE PATIENT, MEDICAL EXAMINATION INFORMATION OF THE PATIENT DETERMINED BY THE PATIENT CARE UNIT FOR THE PATIENT
899
END

FIG. 9

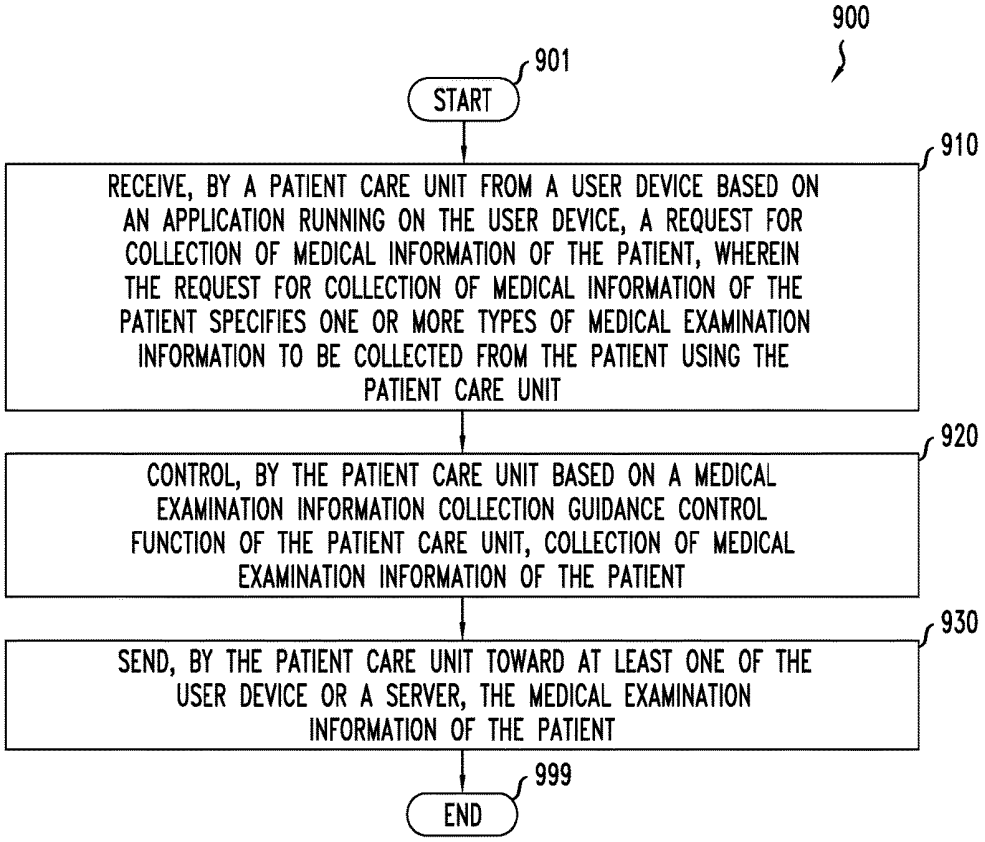
900
901
START
910
RECEIVE, BY A PATIENT CARE UNIT FROM A USER DEVICE BASED ON AN APPLICATION RUNNING ON THE USER DEVICE, A REQUEST FOR COLLECTION OF MEDICAL INFORMATION OF THE PATIENT, WHEREIN THE REQUEST FOR COLLECTION OF MEDICAL INFORMATION OF THE PATIENT SPECIFIES ONE OR MORE TYPES OF MEDICAL EXAMINATION INFORMATION TO BE COLLECTED FROM THE PATIENT USING THE PATIENT CARE UNIT
920
CONTROL, BY THE PATIENT CARE UNIT BASED ON A MEDICAL EXAMINATION INFORMATION COLLECTION GUIDANCE CONTROL FUNCTION OF THE PATIENT CARE UNIT, COLLECTION OF MEDICAL EXAMINATION INFORMATION OF THE PATIENT
930
SEND, BY THE PATIENT CARE UNIT TOWARD AT LEAST ONE OF THE USER DEVICE OR A SERVER, THE MEDICAL EXAMINATION INFORMATION OF THE PATIENT
999
END

FIG. 10

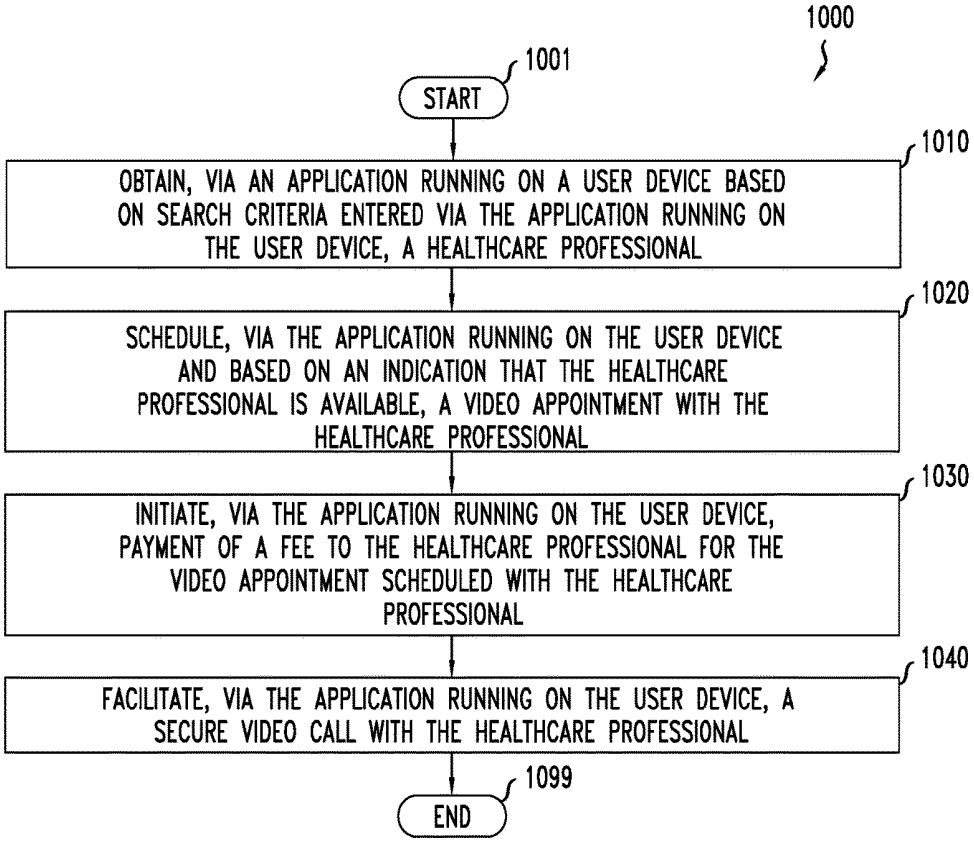
1000
1001
START
1010
OBTAIN, VIA AN APPLICATION RUNNING ON A USER DEVICE BASED ON SEARCH CRITERIA ENTERED VIA THE APPLICATION RUNNING ON THE USER DEVICE, A HEALTHCARE PROFESSIONAL
1020
SCHEDULE, VIA THE APPLICATION RUNNING ON THE USER DEVICE AND BASED ON AN INDICATION THAT THE HEALTHCARE PROFESSIONAL IS AVAILABLE, A VIDEO APPOINTMENT WITH THE HEALTHCARE PROFESSIONAL
1030
INITIATE, VIA THE APPLICATION RUNNING ON THE USER DEVICE, PAYMENT OF A FEE TO THE HEALTHCARE PROFESSIONAL FOR THE VIDEO APPOINTMENT SCHEDULED WITH THE HEALTHCARE PROFESSIONAL
1040
FACILITATE, VIA THE APPLICATION RUNNING ON THE USER DEVICE, A SECURE VIDEO CALL WITH THE HEALTHCARE PROFESSIONAL
1099
END

FIG. 11

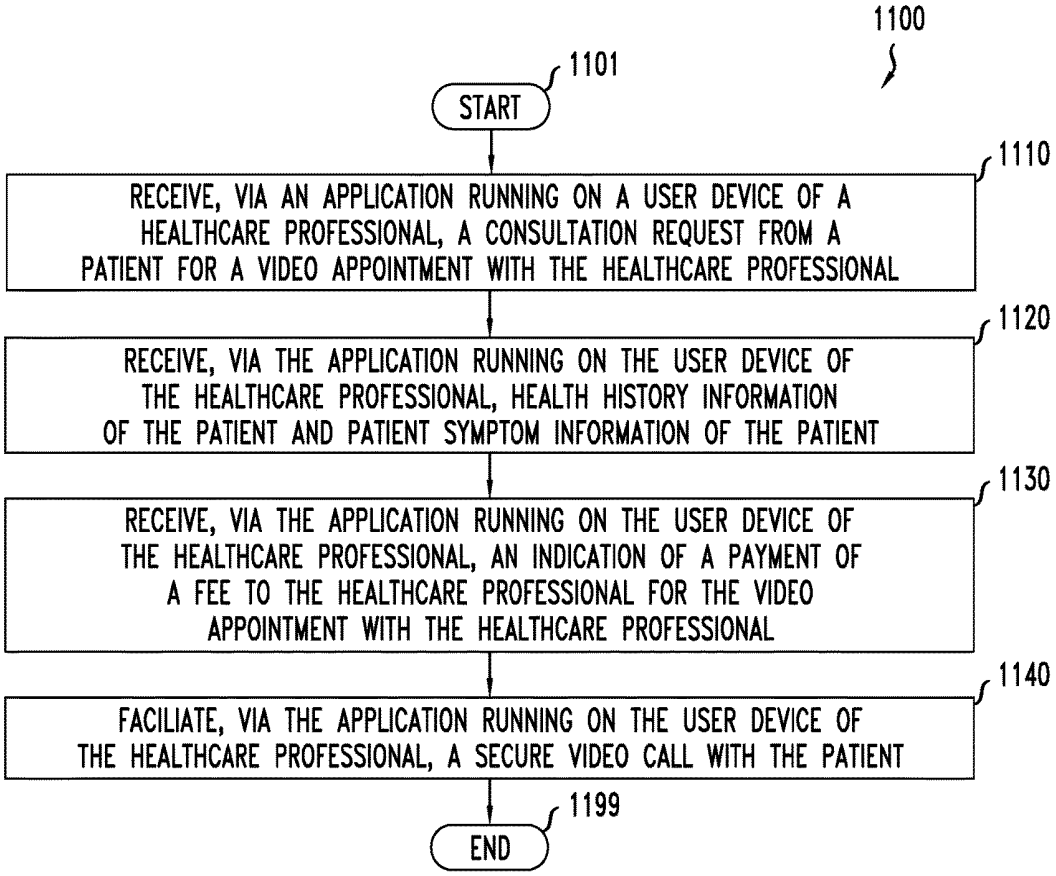
1100
1101
START
1110
RECEIVE, VIA AN APPLICATION RUNNING ON A USER DEVICE OF A HEALTHCARE PROFESSIONAL, A CONSULTATION REQUEST FROM A PATIENT FOR A VIDEO APPOINTMENT WITH THE HEALTHCARE PROFESSIONAL
1120
RECEIVE, VIA THE APPLICATION RUNNING ON THE USER DEVICE OF THE HEALTHCARE PROFESSIONAL, HEALTH HISTORY INFORMATION OF THE PATIENT AND PATIENT SYMPTOM INFORMATION OF THE PATIENT
1130
RECEIVE, VIA THE APPLICATION RUNNING ON THE USER DEVICE OF THE HEALTHCARE PROFESSIONAL, AN INDICATION OF A PAYMENT OF A FEE TO THE HEALTHCARE PROFESSIONAL FOR THE VIDEO APPOINTMENT WITH THE HEALTHCARE PROFESSIONAL
1140
FACILIATE, VIA THE APPLICATION RUNNING ON THE USER DEVICE OF THE HEALTHCARE PROFESSIONAL, A SECURE VIDEO CALL WITH THE PATIENT
1199
END

FIG. 12

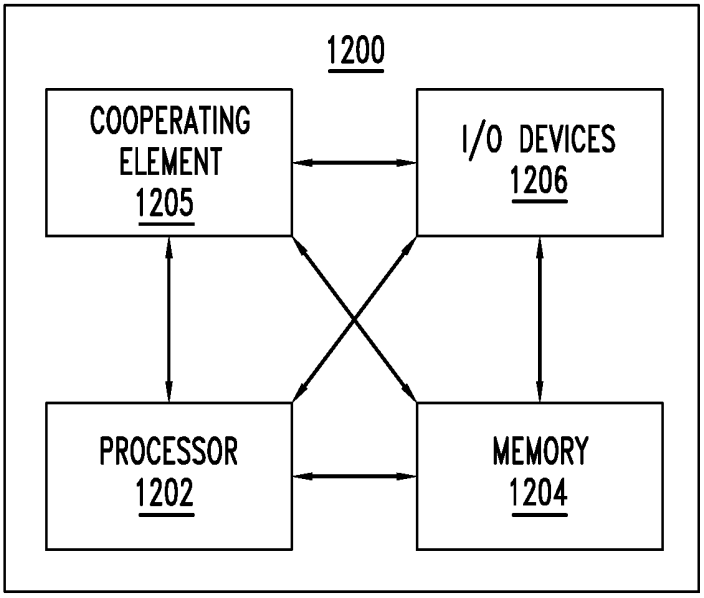
1200
COOPERATING ELEMENT 1205
I/O DEVICES 1206
PROCESSOR 1202
MEMORY 1204

TELEMEDICINE SYSTEM

TECHNICAL FIELD

[0001] Various example embodiments relate generally to healthcare and, more particularly but not exclusively, to telemedicine-based healthcare.

BACKGROUND

[0002] Various technological advances have fostered the development of various telemedicine capabilities; however, while telemedicine capabilities continue to be developed, use of telemedicine by healthcare professionals and patients still has not become widespread.

[0003] Improvements in telemedicine capabilities may spur wider adoption of telemedicine by healthcare professionals and patients, thereby providing various benefits for healthcare professionals and patients.

SUMMARY

[0004] Various example embodiments relate generally to telemedicine capabilities that are configured to support use of telemedicine by healthcare professionals and patients.

[0005] In at least some example embodiments, an apparatus is provided. The apparatus includes at least one processor. The apparatus includes at least one memory including computer program code. The at least one memory and the computer program code are configured to, with the at least one processor, cause the apparatus to at least receive, from a patient application running on a patient user device, a request to schedule a video appointment with a healthcare professional, send, toward a healthcare professional application running on a healthcare professional user device of the healthcare professional, an indication of the request to schedule the video appointment with the healthcare professional, receive, from the healthcare professional application, an indication of an acceptance of the request to schedule the video appointment with the healthcare professional, facilitate a video call between the healthcare professional user device and the patient user device, receive, from a telemedicine device, medical examination information associated with the patient, send, toward the healthcare professional application, the medical examination information associated with the patient, send, toward the healthcare professional application, additional medical information associated with the patient, and receive, from the healthcare professional application, information related to diagnosis of the patient by the healthcare professional.

[0006] In at least some example embodiments, a method is provided. The method includes receiving, from a patient application running on a patient user device, a request to schedule a video appointment with a healthcare professional. The method includes sending, toward a healthcare professional application running on a healthcare professional user device of the healthcare professional, an indication of the request to schedule the video appointment with the healthcare professional. The method includes receiving, from the healthcare professional application, an indication of an acceptance of the request to schedule the video appointment with the healthcare professional. The method includes facilitating a video call between the healthcare professional user device and the patient user device. The method includes receiving, from a telemedicine device, medical examination information associated with the patient. The method includes sending, toward the healthcare professional application, the medical examination information associated with the patient. The method includes sending, toward the healthcare professional application, additional medical information associated with the patient. The method includes receiving, from the healthcare professional application, information related to diagnosis of the patient by the healthcare professional.

[0007] In at least some example embodiments, a non-transitory computer readable medium is provided. The non-transitory computer-readable medium includes program instructions for causing an apparatus to at least receive, from a patient application running on a patient user device, a request to schedule a video appointment with a healthcare professional, send, toward a healthcare professional application running on a healthcare professional user device of the healthcare professional, an indication of the request to schedule the video appointment with the healthcare professional, receive, from the healthcare professional application, an indication of an acceptance of the request to schedule the video appointment with the healthcare professional, facilitate a video call between the healthcare professional user device and the patient user device, receive, from a telemedicine device, medical examination information associated with the patient, send, toward the healthcare professional application, the medical examination information associated with the patient, send, toward the healthcare professional application, additional medical information associated with the patient, and receive, from the healthcare professional application, information related to diagnosis of the patient by the healthcare professional.

[0008] In at least some example embodiments, an apparatus is provided. The apparatus includes means for receiving, from a patient application running on a patient user device, a request to schedule a video appointment with a healthcare professional. The apparatus includes means for sending, toward a healthcare professional application running on a healthcare professional user device of the healthcare professional, an indication of the request to schedule the video appointment with the healthcare professional. The apparatus includes means for receiving, from the healthcare professional application, an indication of an acceptance of the request to schedule the video appointment with the healthcare professional. The apparatus includes means for facilitating a video call between the healthcare professional user device and the patient user device. The apparatus includes means for receiving, from a telemedicine device, medical examination information associated with the patient. The apparatus includes means for sending, toward the healthcare professional application, the medical examination information associated with the patient. The apparatus includes means for sending, toward the healthcare professional application, additional medical information associated with the patient. The apparatus includes means for receiving, from the healthcare professional application, information related to diagnosis of the patient by the healthcare professional.

[0009] In at least some embodiments, a patient care unit is provided. The patient care unit includes a portable housing. The portable housing includes a first portion including a computing device having a touch-sensitive display, a microphone, a speaker, and a set of communication interfaces. The portable housing includes a second portion, configured to provide a base for the portable housing, including a set of

receptacles configured to house a set of medical instruments, wherein the set of medical instruments includes a set of wired medical instruments and a set of wireless medical instruments. The portable housing includes a hinge pivotally connecting the first portion to the second portion to permit the first portion to pivot with respect to the second portion between a closed position and an open position. The portable housing includes a wired medical instrument interface control element communicatively connected to the computing device. The wired medical instrument interface control element is configured to control interfacing between the wired medical instruments and the computing device. The set of communication interfaces includes a local wireless communication interface configured to support interfacing between the wireless medical instruments and the computing device.

BRIEF DESCRIPTION OF THE DRAWINGS

[0010] The teachings herein can be readily understood by considering the following detailed description in conjunction with the accompanying drawings, in which:

[0011] FIG. **1** depicts an example of a healthcare services system configured to support remote healthcare for a patient by a healthcare professional using a telemedicine platform;

[0012] FIG. **2** depicts an example of a telemedicine bag configured for use by a patient or a healthcare provider to enable the patient to obtain remote healthcare services from a healthcare professional;

[0013] FIG. **3** depicts an example of a telemedicine cart configured for use by a patient or a healthcare provider to enable the patient to obtain remote healthcare services from a healthcare professional;

[0014] FIG. **4** depicts an example of a telemedicine server configured to support a telemedicine platform configured to enable patients to obtain remote healthcare services from healthcare professionals;

[0015] FIGS. **5**A-**5**F depict examples of graphical user interfaces of a patient application configured for use by a patient to obtain remote healthcare services from a healthcare professional;

[0016] FIGS. **6**A-**6**D depict examples of graphical user interfaces of a healthcare professional application configured for use by a healthcare professional to provide remote healthcare services to a patient;

[0017] FIG. **7** depicts an example embodiment of a method for use by an integrated telemedicine platform for supporting providing of remote healthcare services to a patient;

[0018] FIG. **8** depicts an example embodiment of a method for interaction by a user device with a patient care unit for supporting providing of remote healthcare services to a patient;

[0019] FIG. **9** depicts an example embodiment of a method for interactions by a patient care unit for supporting providing of remote healthcare services to a patient;

[0020] FIG. **10** depicts an example embodiment of method configured for use by a patient application at a user device of a patient;

[0021] FIG. **11** depicts an example embodiment of method configured for use by a healthcare professional application at a user device of a healthcare professional; and

[0022] FIG. **12** depicts a high-level block diagram of a computer suitable for use in performing various functions presented herein.

[0023] To facilitate understanding, identical reference numerals have been used, where possible, to designate identical elements that are common to the figures.

DETAILED DESCRIPTION

[0024] The present disclosure generally discloses a remote healthcare capability for supporting remote healthcare services for a patient by a healthcare professional. The remote healthcare capability may be provided within the context of a healthcare services system. The remote healthcare capability may enable a patient located remotely (e.g., at home, in a nursing home, in an emergency medical facility, in a rural location, or the like) from a healthcare professional to nevertheless receive healthcare services from the healthcare professional. The remote healthcare capability may include a telemedicine device (e.g., an integrated patient care kit, such as a bag, a cart, or the like) which may be used by a patient located remotely from a healthcare professional (or a user —such as a healthcare professional, family member, or the like—on behalf of the patient) to receive healthcare services from the healthcare professional. The remote healthcare capability may include a patient application or webpage which may be used by a patient located remotely from a healthcare professional to receive healthcare services from the healthcare professional, which may be used by a healthcare professional co-located with the patient to facilitate providing of healthcare services to the patient by a healthcare professional located remotely from the patient, or the like, as well as various combinations thereof. The remote healthcare capability may include a healthcare professional application or webpage which may be used by a healthcare professional located remotely from a patient to provide healthcare services to the patient, which may be used by a healthcare professional co-located with the patient to facilitate providing of healthcare services to the patient by a healthcare professional located remotely from the patient, or the like, as well as various combinations thereof. The remote healthcare capability may include a telemedicine platform configured to support integration of the applications (e.g., the patient application and the healthcare professional application) and the telemedicine devices in order to support various remote healthcare scenarios. The remote healthcare capability may be configured to provide a comprehensive telemedicine platform and patient care unit supporting effective remote patient care, providing a telemedicine platform suitable for a variety of remote care scenarios and providing an integrated patient care device (e.g., a bag, a cart, or the like) configured to enable a healthcare professional to remotely perform a detailed physical examination to gain a precise, definitive picture of the condition of the patient. The remote healthcare capability may be configured to provide an integrated telemedicine platform that is configured to create unique remote healthcare facilities. The remote healthcare capability may include various other capabilities which may enable interfacing between a patient and a healthcare professional such that the healthcare professional can provide healthcare services to the patient remotely. It will be appreciated that these and various other embodiments and advantages and potential advantages of the remote healthcare capability may be further understood by way of reference to the example healthcare services system of FIG. **1**.

[0025] FIG. **1** depicts an example of a healthcare services system configured to support remote healthcare for a patient by a healthcare professional using a telemedicine platform.

[0026] The healthcare services system **100** includes a communication network **101**, a patient location **110** at which a patient **111** is located, a healthcare professional location **120** at which a healthcare professional **121** is located, a healthcare infrastructure **130**, and a telemedicine server **140**.

[0027] The communication network **101** may be any communication network suitable for supporting communications within the healthcare services system **100**. For example, the communication network **101** may include one or more wireline networks (e.g., one or more wireless networks, or the like, as well as various combinations thereof.

[0028] The patient location **110** may be any location at which the patient **111** may be located. The patient location **110** is expected to be remote from the healthcare professional location **120**. The patient location **110** may be the home of the patient **111**, the office of the patient **111**, a location to which the patient **111** has traveled for work, a location to which the patient **111** has traveled for vacation, a location to which the patient **111** has traveled for care (e.g., a skilled nursing care facility, an urgent care facility, a rural clinic, or the like), or the like. The patient location **110** may be too remote to permit the patient **111** to travel to the healthcare professional location **120** (although it will be appreciated that there may be other reasons that the patient **111** may not travel to the healthcare profession location **120**, such as where the patient is too sick, does not have the means to travel there, would prefer to remain at their current location, or the like, as well as various combinations thereof).

[0029] The patient **111** has a patient device **112** by which the patient **111** at the patient location **110** may interact with the healthcare professional **121** at the healthcare professional location **120**.

[0030] In at least some embodiments, the patient device **112** may be a communication device of the patient **111** (e.g., a smartphone, a computer, or the like). In at least some such embodiments, the patient device **112** may be running an application installed on the patient device **112** (e.g., a CureCompanion for Patients application, as presented with respect to FIGS. **5**A-**5**F, or other similar application).

[0031] In at least some embodiments, the patient device **112** may be a telemedicine device. In at least some such embodiments, the telemedicine device may be a CureCompanion telemedicine bag as presented with respect to FIG. **2**, a CureCompanion telemedicine cart as presented with respect to FIG. **3**, or other similar telemedicine device configured to enable healthcare services to be provided to the patient **111** by the healthcare professional **121**). The telemedicine device may include an assortment of devices (e.g., user interaction devices, communication devices, medical instruments, connectivity devices, and so forth) configured to work seamlessly with the telemedicine platform provided by the telemedicine server **140**.

[0032] It will be appreciated that, although primarily presented with respect to an embodiment in which the patient **111** uses a single patient device **112** at the patient location **110** to obtain healthcare services from the health professional **121**, the patient **111** may use multiple patient devices **112** at the patient location **110** to obtain healthcare services from the health professional **121** (e.g., multiple communication devices, a communication device and a telemedicine kit, various IoT devices which may be configured to support remote health monitoring for the patient **111** (e.g., heart rate monitors, blood pressure monitors, blood sugar monitors, blood oxygen monitors, temperature monitors, or the like, as well as various combinations thereof), or the like, as well as various combinations thereof. It will be appreciated that, although primarily presented with respect to a single patient location **110**, the healthcare services system **100** may support multiple patient locations (and potentially a large number of patient locations).

[0033] The healthcare professional location **120** may be any location at which the healthcare professional **121** may be located. The healthcare professional location **120** is expected to be remote from the patient location **110**. The healthcare professional location **120** may be the home of the healthcare professional **121**, the office of the healthcare professional **121**, a location to which the healthcare professional **121** has traveled for work (e.g., a hospital, a conference, or the like) or vacation, or the like. The healthcare professional location **120** may be a call center to which the healthcare professional **121** may travel in order to provide remote healthcare services for the patient **111** and potentially other patients (omitted for purposes of clarity), a call center specifically staffed with the healthcare professional **121** and potentially other healthcare professionals (omitted for purposes of clarity) to provide remote healthcare services for patients such as patient **111**, or the like. The healthcare professional location **120** may be too remote to permit the patient **111** to travel to the healthcare professional location **120** (although it will be appreciated that there may be other reasons that the patient **111** may not travel to the healthcare profession location **120**, such as where the patient is too sick, does not have the means to travel there, would prefer to remain at their current location, or the like, as well as various combinations thereof).

[0034] The healthcare professional **121** has a healthcare professional device **122** by which the healthcare professional **121** at the healthcare professional location **120** may interact with the patient **111** at the patient location **110**.

[0035] In at least some embodiments, the healthcare professional device **122** may be a communication device of the healthcare professional **121** (e.g., a smartphone, a computer, or the like). In at least some such embodiments, the healthcare professional device **122** may be running an application installed on the healthcare professional device **122** (e.g., a CureCompanion for Doctors application, as presented with respect to FIGS. **6**A-**6**D, or other similar application).

[0036] In at least some embodiments, the healthcare professional device **122** may be a workstation. In at least some such embodiments, the workstation may be a workstation within a call center, or other similar workstation or terminal).

[0037] It will be appreciated that, although primarily presented with respect to an embodiment in which the healthcare professional **121** uses a single healthcare professional device **122** at the healthcare professional location **120** to provide healthcare services to the patient **111**, the healthcare professional **121** may use multiple healthcare professional devices **122** at the healthcare professional location **120** to provide healthcare services to the patient **111** (e.g., multiple communication devices, a communication device and a workstation, or the like, as well as various combinations thereof. It will be appreciated that, although primarily presented with respect to a single healthcare professional loca-

tion **120**, the healthcare services system **100** may support multiple healthcare professional locations (and potentially a large number of healthcare professional locations).

[0038] The healthcare infrastructure **130** may include any healthcare infrastructure that may be used in providing healthcare services to the patient **111** at the patient location **110**. For example, the healthcare infrastructure **130** may include emergency services **131** (e.g., public safety answering points (PSAPs), ambulance services, hospital emergency services, or the like, as well as various combinations thereof), healthcare services **132** (e.g., hospitals, doctors offices, urgent care facilities, in-patient facilities, out-patient facilities, or the like, as well as various combinations thereof), pharmaceutical services **133** (e.g., pharmacies or other dispensaries), or other healthcare services **134** (e.g., health data handling services, health insurance services, or the like, as well as various combinations thereof). The healthcare infrastructure **130** may include various types of healthcare resources, such as healthcare treatment facilities, healthcare transport facilities, healthcare personnel (e.g., doctors, physician assistants, nurses, or the like), communications resources, or the like, as well as various combinations thereof.

[0039] The healthcare infrastructure **130** may support treatment of the patient **111** at the patient location **110** based on various types of communications. The patient **111** at the patient location **110** may communicate with the healthcare infrastructure **130** directly (e.g., requesting emergency medical services, making appointments with other healthcare professionals, consulting other healthcare professionals, calling in prescriptions to pharmacies, or the like, as well as various combinations thereof). The healthcare profession **121** at the healthcare professional location **120** may communicate with the healthcare infrastructure **130** on behalf of the patient **111** at the patient location **110** (e.g., requesting emergency medical services for the patient **111**, making appointments for the patient **111** to consult healthcare professionals, calling in prescriptions to pharmacies on behalf of the patient **111**, or the like, as well as various combinations thereof). The healthcare profession **121** at the healthcare professional location **120** may communicate with the healthcare infrastructure **130** for purposes of providing healthcare services to the patient **111** (e.g., requesting emergency medical services for the patient **111**, consulting with other healthcare professionals regarding the patient **111**, or the like, as well as various combinations thereof).

[0040] The telemedicine server **140** may be configured to support treatment of the patient **111** at the patient location **110** by the health professional **121** at the health professional location.

[0041] The telemedicine server **140** may be configured to support use of the patient device **112** by the patient **111** at the patient location **110** (e.g., supporting use of an application installed on the patient device **112** (e.g., a patient application (e.g., a CureCompanion for Patients application), as presented with respect to FIGS. **5A-5F**, or other similar application or webpage), supporting use of a telemedicine kit where the patient device **112** includes a telemedicine kit, or the like, as well as various combinations thereof). For example, where the patient **111** is using an application on the patient device **112** to obtain remote healthcare services, the telemedicine server **140** may be running a server instance of the application corresponding to the client instance of the application running on the patient device **112**. The telemedicine server **140** may support various functions supported by the application running on the patient device **112**, such as enabling the patient **111** to search for and find healthcare professionals, enabling the patient **111** to schedule remote appointments with healthcare professionals, enabling the patient **111** to attend remote appointments with healthcare professionals, enabling the patient **111** to pay for remote appointments with healthcare professionals, securely storing health records and history for the patient **111** across healthcare professions, or the like, as well as various combinations thereof.

[0042] The telemedicine server **140** may be configured to support use of the healthcare professional device **122** by the healthcare professional **121** at the healthcare professional location **120** (e.g., supporting use of an application installed on the healthcare professional device **122** (e.g., a healthcare professional application (e.g., a CureCompanion for Doctors application), as presented with respect to FIGS. **6A-6D**, or other similar application or webpage), supporting use of a workstation where the healthcare professional device **122** includes a workstation, or the like, as well as various combinations thereof. For example, where the healthcare professional **121** is using an application on the healthcare professional device **122** to provide remote healthcare services, the telemedicine server **140** may be running a server instance of the application corresponding to the client instance of the application running on the healthcare professional device **122**. The telemedicine server **140** may support various functions supported by the application running on the healthcare professional device **122**, such as maintaining a public profile for enabling patients to locate the healthcare professional **121**, enabling scheduling of remote appointments by patients with the healthcare professional **121**, enabling patients to fill out their health history and symptoms, enabling attendance of remote appointments by patients with the healthcare professional **121** (e.g., enabling the healthcare professional **121** to review patient records, conduct a remote examination, speak with the patient, or the like), enabling the healthcare professional **121** to write provide orders for patients (e.g., test prescriptions, medicine prescriptions, doctor's notes, or the like), collecting payment for remote appointments by patients with the healthcare professional **121**, or the like, as well as various combinations thereof.

[0043] The telemedicine server **140** may be composed one a set of one or more physical servers, a set of one or more virtual servers, or the like, as well as various combinations thereof. The telemedicine server **140** may be provided using a cloud-based implementation using various combinations of virtual elements. The telemedicine server **140** may be provided in various other ways.

[0044] The various communications between entities of the healthcare services system **100** may be provided in various ways. The communications may include audio communications, video communications, multimedia communications, diagnostic communications, or the like, as well as various combinations thereof. The communications between entities of the healthcare services system **100** may be secure (e.g., secure audio calls, secure video calls, or the like). The communications between entities of the healthcare services system **100** may be initiated by the patient **111**, the healthcare professional **121**, healthcare professionals associated with the healthcare infrastructure **130**, the telemedicine server **140** (e.g., based on scheduling of communications

(e.g., scheduled appointments, periodic checkups, or the like), based on monitoring of conditions associated with the patient **111** (e.g., detection of a heart condition by the telemedicine server **140** based on analysis of heart monitor data by the telemedicine server **140** or an indication of a heart condition communicated to the telemedicine server **140** by another server performing heart monitoring data analysis for the patient **111**, detection of a blood sugar condition by the telemedicine server **140** based on analysis of blood sugar data by the telemedicine server **140** or an indication of a blood sugar condition communicated to the telemedicine server **140** by another server performing blood sugar monitoring data analysis for the patient **111**, or the like), or the like), or the like, as well as various combinations thereof.

[0045] It will be appreciated that, although primarily presented with respect to specific numbers, types, and arrangements of locations, entities, and elements, various other numbers, types, and/or arrangements of locations, entities, and/or elements may be used to provide healthcare services system **100**.

[0046] FIG. **2** depicts an example of a telemedicine bag configured for use by a patient or a healthcare provider to enable the patient to obtain remote healthcare services from a healthcare professional.

[0047] The telemedicine bag **200** of FIG. **2** is suitable for use as the patient device **112** of FIG. **1**. The telemedicine bag **200** may be operated by a healthcare provider who is co-located with the patient, may be operated by the patient, may be operated by a relative or friend of the patient, or the like, as well as various combinations thereof.

[0048] The telemedicine bag **200** includes a housing **201** composed of a top portion **202** and a base portion **203**. The top portion **202** and the base portion **203** are pivotally connected by a hinge **204**, thereby permitting the top portion **202** to pivot with respect to the base portion **203** between a closed position and an open position. The telemedicine bag **200** is portable and, thus, the housing **201** may be considered to be a portable housing.

[0049] The telemedicine bag **200** includes a computing device **210**. As illustrated in FIG. **2**, the computing device **210** is disposed within the top portion **202** of the housing **201**. The computing device **210** may be a touch-based computing device, such as a tablet computer, a smartphone, or the like. The computing device **210** may have various communications capabilities, including network connection capabilities for enabling the computing device **210** to communicate via communication networks (e.g., a transmitter (s), a receiver(s), network interface cards, or the like, as well as various combinations thereof), user communication capabilities for enabling the user(s) of the telemedicine bag **200** to communicate with a healthcare professional (e.g., a microphone(s), a speaker(s), a camera(s), or the like, as well as various combinations thereof), or the like, as well as various combinations thereof. The computing device **210**, as discussed further below, may be configured to provide various control functions associated with use of the telemedicine bag **200** for enabling the patient to obtain remote healthcare services from a healthcare professional (e.g., collecting medical information from the patient, accessing a patient application configured for use by a patient to obtain remote healthcare services from a healthcare professional, or the like, as well as various combinations thereof). The computing device **210** may be configured to provide various control functions associated with use of the telemedicine bag **200** for enabling the patient to obtain remote healthcare services from a healthcare professional based on one or more of a patient application or webpage (e.g., which may be used by a patient located remotely from a healthcare professional to receive healthcare services from the healthcare professional, which may be used by a healthcare professional co-located with the patient to facilitate providing of healthcare services to the patient by a healthcare professional located remotely from the patient, or the like, as well as various combinations thereof), a healthcare professional application or webpage (e.g., which may be used by a healthcare professional located remotely from a patient to provide healthcare services to the patient, which may be used by a healthcare professional co-located with the patient to facilitate providing of healthcare services to the patient by a healthcare professional located remotely from the patient, or the like, as well as various combinations thereof), or the like, as well as various combinations thereof. The computing device **210** may be configured to provide various other control functions associated with use of the telemedicine bag **200** for enabling the patient to obtain remote healthcare services from a healthcare professional.

[0050] The telemedicine bag **200** includes a set of receptacles **220** configured to house a set of medical instruments **230** (illustratively, including medical instruments **230-1**-**230-9**). As illustrated in FIG. **2**, the receptacles **220** are disposed within the base portion of the housing **201**. The receptacles **220** are shaped based on the medical instruments intended to be housed, respectively. The medical instruments **230** are configured to be communicatively connected to the computing device **210**, thereby enabling readings of the medical instruments **230** to be obtained by the computing device **210** (e.g., for storage on the computing device **210**, for storage on the telemedicine server **140** in an account of the patient, for transmission to a healthcare professional from which the patient is obtaining or will obtain remote healthcare services, or the like, as well as various combinations thereof).

[0051] The medical instruments **230** include wired medical instruments (illustratively, medical instruments **230-1**-**230-4**, which also may be referred to more generally as wired medical instruments **230**-*x*) that are communicatively connected to computing device **210** via wired interfaces (e.g., using Universal Serial Bus (USB) connections or other suitable wired connections). For example, one of the receptacles **220** may be configured to house a digital stethoscope **230-1**, which is connected to the computing device **210** via a USB connection (although it will be appreciated that other types of connections may be used). For example, one of the receptacles **220** may be configured to house an examination camera **230-2**, which is connected to the computing device **210** via a USB connection (although it will be appreciated that other types of connections may be used). For example, one of the receptacles **220** may be configured to house a digital otoscope **230-3**, which is connected to the computing device **210** via a USB connection (although it will be appreciated that other types of connections may be used). For example, one of the receptacles **220** may be configured to house a digital iriscope **230-4**, which is connected to the computing device **210** via a USB connection (although it will be appreciated that other types of connections may be

used). It will be appreciated that fewer or more wired medical instruments may be integrated within the telemedicine bag **200**.

[0052] The telemedicine bag **200** includes a wired medical instrument interface control element **240** that may be configured to control interfacing between the wired medical instruments **230**-*x* and the computing device **210**. The wired medical instrument interface control element **240** may include a set of control buttons **241-1-241-4** (collectively, control buttons **241**) associated with the wired medical instruments **230-1-230-4**, respectively.

[0053] The wired medical instrument interface control element **240** may be configured to, responsive to actuation of a control button **241** associated with a wired medical instrument **230**-*x*, perform a control action associated with the wired medical instrument **230**-*x* associated with the control button **241**. The control action may include connecting the wired medical instrument **230**-*x* to the computing device **210** via a USB connection, initializing the wired medical instrument **230**-*x* to enter a particular state (e.g., a state in which the wired medical instrument **230**-*x* may be configured to take a reading, a state in which the wired medical instrument **230**-*x* may be configured to take a reading and send the reading to the computing device **210**, or the like), initiating the computing device **210** to enter a particular state for the wired medical instrument **230**-*x* (e.g., a state in which the computing device **210** may be configured to request a reading from the wired medical instrument **230**-*x*, a state in which the computing device **210** may be configured to receive a reading from the wired medical instrument **230**-*x*, a state in which the computing device **210** may be configured to receive a reading from the wired medical instrument **230**-*x* and process the reading from the wired medical instrument **230**-*x*, a state in which the computing device **210** may be configured to receive a reading from the wired medical instrument **230**-*x* and send the reading toward the telemedicine server **140** (e.g., for storage in an account of the patient, for delivery to a healthcare professional from which the patient is obtaining or will obtain remote healthcare services, or the like, as well as various combinations thereof), or the like, as well as various combinations thereof).

[0054] The wired medical instrument interface control element **240** may be configured such that the control buttons **241** may have lighting elements associated therewith. The lighting elements of the control buttons **241** may be configured to switch between unlit and lit states depending on the status of control actions initiated when the control buttons **241** are actuated. For example, the lighting element associated with a control button **241** for a wired medical instrument **230**-*x* may switch from an unlit state to a lit state to indicate that the wired medical instrument **230**-*x* has been communicatively connected to the computing device **210**. For example, the lighting element associated with a control button **241** for a wired medical instrument **230**-*x* may switch from an unlit state to a lit state to indicate that the wired medical instrument **230**-*x* has been communicatively connected to the computing device **210** and that the wired medical instrument **230**-*x* has been initialized and is ready to take a reading, thereby informing the user of the telemedicine bag **200** that the wired medical instrument **230**-*x* may now be used to take a reading. It will be appreciated that the lighting element associated with a control button **241** for a wired medical instrument **230**-*x* may switch from an unlit state to a lit state in response to various other conditions. It will be appreciated that the lighting element associated with a control button **241** for a wired medical instrument **230**-*x* also may switch from a lit state to an unlit state after the wired medical instrument **230**-*x* is no longer needed (e.g., after a reading has been taken with the wired medical instrument **230**-*x*, after a reading has been taken with the wired medical instrument **230**-*x* and provided to the computing device **210**, upon selection of a different control button **241** associated with a different wired medical instrument **230**-*x*, upon selection of a wireless medical instrument, or the like).

[0055] The wired medical instrument interface control element **240** may be configured such that switching of the lighting elements associated with the control buttons **241** between unlit and lit states may be controlled by the computing device **210**. The computing device **210** may be configured to control switching of the lighting elements associated with the control buttons **241** between unlit and lit states in order to guide the user of the telemedicine bag **200** through use of the wired medical instruments **230-1-230-4**. The computing device **210** may be configured to control switching of the lighting elements associated with the control buttons **241** between unlit and lit states in an order determined by the computing device **210** (e.g., based on a predetermined order, based on information received from a local user of the telemedicine bag **200**, based on information received from a healthcare professional from which the patient is obtaining or will obtain remote healthcare services (e.g., the nurse or doctor indicates an order in which vitals of the patient are to be taken), or the like, as well as various combinations thereof). The wired medical instrument interface control element **240** may be configured such that switching of the lighting elements associated with the control buttons **241** between unlit and lit states may be controlled by the computing device **210** in various other ways.

[0056] The wired medical instrument interface control element **240** may be configured such that the control buttons **241** may be implemented using various types of lighting elements. The lighting elements may be light emitting diodes (LEDs), lasers, or other suitable types of lighting elements.

[0057] It will be appreciated that multiple lit states (e.g., using different levels of brightness, different lighted locations, different colors, or the like) may be supported for one or more control buttons **241** in order to represent different states of the associated wired medical instruments **230**-*x* (e.g., connected to the computing device **210**, initiated for taking a reading and providing the reading to the computing device **210**, reading complete and provided to the computing device **210**, or the like).

[0058] It will be appreciated that, although primarily presented with respect to use of lighting elements as indicators for the control buttons **241** of the associated wired medical instruments **230**-*x*, other suitable types of indicators may be employed to help guide the user of the telemedicine bag **200** through use of the medical instruments **230** for enabling the patient to obtain remote healthcare services.

[0059] It will be appreciated that, although primarily presented with respect to embodiments in which the wired medical instrument interface control element **240** is associated with the top portion **202** of the telemedicine bag **200**, in at least some embodiments the wired medical instrument interface control element **240** may be associated with a

different portion of the telemedicine bag **200** (e.g., the top portion **202** of the telemedicine bag **200**, the housing **201** of the telemedicine bag **200**, the computing device **210**, or the like), may be provided via a display interface of the computing device **210** (e.g., using graphical versions of control buttons **241** or other suitable virtual versions of control buttons **241** which may be presented and actuated via a display interface of the computing device **210**), or the like, as well as various combinations thereof.

[0060] The medical instruments **230** include wireless medical instruments (illustratively, medical instruments **230-5-230-9**, which also may be referred to more generally as wireless medical instruments **230**-*y*) that are communicatively connected to computing device **210** via wireless interfaces (e.g., using Bluetooth connections or other suitable wireless connections). For example, one of the receptacles **220** may be configured to house a blood pressure monitor **230-5**, which may be connected to the computing device **210** via pairing with a Bluetooth connection (although it will be appreciated that other types of connections may be used). For example, one of the receptacles **220** may be configured to house a pulse oximeter **230-6**, which may be connected to the computing device **210** via pairing with a Bluetooth connection (although it will be appreciated that other types of connections may be used). For example, one of the receptacles **220** may be configured to house a glucometer **230-7**, which may be connected to the computing device **210** via pairing with a Bluetooth connection (although it will be appreciated that other types of connections may be used). For example, one of the receptacles **220** may be configured to house a spirometer **230-8**, which may be connected to the computing device **210** via pairing with a Bluetooth connection (although it will be appreciated that other types of connections may be used). For example, one of the receptacles **220** may be configured to house a thermometer **230-9**, which may be connected to the computing device **210** via pairing with a Bluetooth connection (although it will be appreciated that other types of connections may be used). It will be appreciated that fewer or more wireless medical instruments may be integrated within the telemedicine bag **200**.

[0061] The telemedicine bag **200** includes a wireless medical instrument interface control capability that is configured to control interfacing between the wireless medical instruments and the computing device **210**. The wireless medical instrument interface control capability may be provided by the computing device **210**, such as by enabling selection of the wireless medical instruments using touch-screen capabilities of the computing device **210** (e.g., the wireless medical instruments may be paired with the computing device **210** via Bluetooth responsive to actuation of buttons on the touchscreen display of computing device **210**). It will be appreciated that interfacing between the wireless medical instruments and the computing device **210** may be provided in other ways.

[0062] The wireless medical instrument interface control capability may be configured to, responsive to actuation of a control button associated with a wireless medical instrument **230**-*y* (e.g., a graphical element on the touch-screen display of the computing device **210**), perform a control action associated with the wireless medical instrument **230**-*y* associated with the control button associated with a wireless medical instrument **230**-*y*. The control action may include connecting the wireless medical instrument **230**-*y* to the computing device **210** via a wireless connection (e.g., pairing via Bluetooth), initializing the wireless medical instrument **230**-*y* to enter a particular state (e.g., a state in which the wireless medical instrument **230**-*y* may be configured to take a reading, a state in which the wireless medical instrument **230**-*y* may be configured to take a reading and send the reading to the computing device **210**, or the like), initiating the computing device **210** to enter a particular state for the wireless medical instrument **230**-*y* (e.g., a state in which the computing device **210** may be configured to request a reading from the wireless medical instrument **230**-*y*, a state in which the computing device **210** may be configured to receive a reading from the wireless medical instrument **230**-*y*, a state in which the computing device **210** may be configured to receive a reading from the wireless medical instrument **230**-*y* and process the reading from the wireless medical instrument **230**-*y*, a state in which the computing device **210** may be configured to receive a reading from the wireless medical instrument **230**-*y* and send the reading toward the telemedicine server **140** (e.g., for storage in an account of the patient, for delivery to a healthcare professional from which the patient is obtaining or will obtain remote healthcare services, or the like, as well as various combinations thereof), or the like, as well as various combinations thereof).

[0063] The wireless medical instrument interface control capability may be configured such that the control buttons may be presented and controlled in various ways. The control buttons for the wireless medical instruments **230**-*y* may be presented via the touch-screen display of the computing device **210** in various ways, such as where the control buttons for the wireless medical instruments **230**-*y* may all be presented via the touch-screen display of the computing device **210** (e.g., such that any of the wireless medical instruments **230**-*y* may be used at any time), may be presented via the touch-screen display of the computing device **210** individually in a serial manner in order to guide the healthcare professional from which the patient is obtaining or will obtain remote healthcare services through use of the wireless medical instruments **230**-*y*, or the like, as well as various combinations thereof. The control buttons for the wireless medical instruments **230**-*y* may be controlled to provide status information regarding availability and use of the wireless medical instruments **230**-*y*. The control buttons for the wireless medical instruments **230**-*y* may be controlled to switch between states (e.g., selectable versus un-selectable, highlighted versus un-highlighted, enlarged versus not enlarged, flashing versus not flashing, or the like, as well as various combinations thereof) depending on the status of control actions initiated when the control buttons **241** are actuated. For example, the control button associated with a wireless medical instrument **230**-*y* may switch states to indicate that the wireless medical instrument **230**-*y* has been communicatively connected to the computing device **210**. For example, the control button associated with a wireless medical instrument **230**-*y* may switch states to indicate that the wireless medical instrument **230**-*y* has been communicatively connected to the computing device **210** and that the wireless medical instrument **230**-*y* has been initialized and is ready to take a reading, thereby informing the user of the telemedicine bag **200** that the wireless medical instrument **230**-*y* may now be used to take a reading. It will be appreciated that the control button associated with a wireless medical instrument **230**-*y* may switch

states in response to various other conditions. It will be appreciated that the control button associated with a wireless medical instrument **230**-*y* may switch states in response to an indication that the wireless medical instrument **230**-*y* is no longer needed (e.g., after a reading has been taken with the wireless medical instrument **230**-*y*, after a reading has been taken with the wireless medical instrument **230**-*y* and provided to the computing device **210**, upon selection of a different control button associated with a different wireless medical instrument **230**-*y*, upon selection of a wired medical instrument, or the like).

[0064] The wireless medical instrument interface control capability may be configured such that switching of the control buttons between states may be controlled by the computing device **210**. The computing device **210** may be configured to control switching of the control buttons between states in order to guide the user of the telemedicine bag **200** through use of the wireless medical instruments **230**-*y*. The computing device **210** may be configured to control switching of the control buttons between states in an order determined by the computing device **210** (e.g., based on a predetermined order, based on information received from a local user of the telemedicine bag **200**, based on information received from a healthcare professional from which the patient is obtaining or will obtain remote healthcare services (e.g., the nurse or doctor indicates an order in which vitals of the patient are to be taken), or the like, as well as various combinations thereof). The wireless medical instrument interface control capability may be configured such that switching of the control buttons between states may be controlled by the computing device **210** in various other ways.

[0065] The wireless medical instrument interface control capability may be configured such that the control buttons may be presented on the computing device **210** in various ways (e.g., using various types of graphical objects, arranged in various ways with respect to each other or other graphical elements, or the like, as well as various combinations thereof).

[0066] It will be appreciated that multiple display states (e.g., using different colors, different sizes, different locations, different status indicators, or the like) may be supported for one or more control buttons in order to represent different states of the associated wireless medical instruments **230**-*y* (e.g., connected to the computing device **210**, initiated for taking a reading and providing the reading to the computing device **210**, reading complete and provided to the computing device **210**, or the like).

[0067] It will be appreciated that, although primarily presented with respect to use of graphical elements as the control buttons of the associated wireless medical instruments **230**-*y*, other suitable types of elements may be employed to help guide the user of the telemedicine bag **200** through use of the medical instruments **230** for enabling the patient to obtain remote healthcare services.

[0068] It will be appreciated that, although primarily presented with respect to use of the control buttons **241** as control buttons for the wired medical instruments **230**-*x* and use of graphical elements as the control buttons of the associated wireless medical instruments **230**-*y*, control buttons for the wired medical instruments **230**-*x* may be provided using various other types of elements (e.g., using graphical elements of the touch-screen display of computing device **210** similar to those used for the wireless medical instruments **230**-*y*), control buttons for the wireless medical instruments **230**-*y* may be provided using various other types of elements (e.g., using physical control buttons similar to the control buttons used for the wired medical instruments **230**-*x*), or the like, as well as various combinations thereof.

[0069] It will be appreciated that, although the telemedicine bag **200** is primarily presented herein as having specific types and arrangements of elements (e.g., computing device **210**, medical instruments **230**, and the like), the telemedicine bag **200** may include fewer or more elements (e.g., additional computing devices **210**, fewer or more receptacles **220**, fewer or more medical instruments **230**, or the like), may support other arrangements of elements (e.g., other arrangements of the computing device **210** with respect to the medical instruments **230**, other arrangements of the receptacles **220** with respect to each other, other arrangements of the receptacles **220** and the medical instruments **230** with respect to each other, or the like), or the like, as well as various combinations thereof. FIG. **3** depicts an example of a telemedicine cart configured for use by a patient or a healthcare provider to enable the patient to obtain remote healthcare services from a healthcare professional.

[0070] The telemedicine cart **300** of FIG. **3** is suitable for use as the patient device **112** of FIG. **1**. The telemedicine cart **300** of FIG. **3** may be considered to be a modified version of the telemedicine bag **200** presented with respect to FIG. **2**. The telemedicine cart **300** may be operated by a healthcare provider who is co-located with the patient or may be operated by the patient.

[0071] The telemedicine cart **300** of FIG. **3** is similar to the telemedicine bag **200** of FIG. **2** in certain ways (e.g., in terms of the types of devices included and the manner in which those devices operate), but is different from the telemedicine bag **200** of FIG. **2** in certain ways (e.g., in terms of the arrangement of the devices).

[0072] The telemedicine cart **300** includes a base portion **301**, a stand portion **302**, and a medical examination portion **303**.

[0073] The base portion **301** provides a base for the stand portion **302** and, thus, for the medical examination portion **303**. The base portion **301** includes four wheels, which enable the telemedicine cart **300** to be moved relatively easily (e.g., between rooms, between buildings, or the like). The base portion **301** may be configured to have a relatively wide base (e.g., relative to the height and weight of the stand portion **302** and the medical examination portion **303**) so as to eliminate or reduce the potential for the telemedicine cart **300** to fall over. It will be appreciated that the base portion **301** may be arranged in other ways, may include other elements or support other features or functions, or the like.

[0074] The stand portion **302** connects the medical examination portion **303** to the base portion **301**. The stand portion **302** may be any height conducive to use of the medical examination portion **303** by a patient or a healthcare professional. The stand portion **302** may be configured to support adjustability of the height of the medical examination portion **303** to facilitate use of the medical examination portion **303** by a patient or a healthcare professional. It will be appreciated that the stand portion **302** may be arranged in other ways, may include other elements or support other features or functions, or the like.

[0075] The medical examination portion **303**, as illustrated in FIG. **3**, may include the same or substantially the same elements as the telemedicine bag **200** of FIG. **2**; however, as illustrated in FIG. **3**, the arrangement of the elements is different than the telemedicine bag **200** of FIG. **2**. It also will be appreciated that the set of elements of medical examination portion **303** may be different than the set of elements of the telemedicine bag **200** of FIG. **2**.

[0076] The medical examination portion **303** of the telemedicine cart **300** includes a computing device **310**, a set of medical instrument support elements **320**, and a set of medical instruments **330**.

[0077] The computing device **310** includes a display portion **311** and a control portion **312**. The display portion **311** may be a tablet or other computing device, a television or other display device, or the like. The control portion **312** may be a mouse, a mouse and a keyboard, or the like. The computing device **310** also may include a pan-tilt-zoom (PTZ) camera **313**. The computing device **310** may be configured to operate in a manner similar to the computing device **210** of the telemedicine bag **200** of FIG. **2**. It will be appreciated that, although omitted from FIG. **3** for purposes of clarity, the computing device **310** may be a computing device in which the display portion **311** and the control portion **312** are at least partially integrated (e.g., a laptop computer, a tablet computer, or the like).

[0078] The set of medical instrument support elements **320** includes a shelf **321** and a drawer **322**. The shelf **321** supports placement of medical instruments **330** before, during, and after use of the medical instruments **330**. The drawer **322** supports storage of medical instruments **330** when the medical instruments **330** are not being used. It will be appreciated that the medical instrument support elements **320** may include fewer or more shelves, fewer or more drawers, one or more other types of medical instrument support elements, or the like, as well as various combinations thereof.

[0079] The medical instruments **330** include wired medical instruments (illustratively, medical instruments **330-1**-**330-4**) that are communicatively connected to computing device **310** via wired interfaces (e.g., using Universal Serial Bus (USB) connections or other suitable wired connections). For example, the wired medical instruments **330**-*x* include a digital stethoscope **330-1**, an examination camera **330-2**, a digital otoscope **330-3**, and a digital iriscope **330-4**. The wired medical instruments **330**-*x* may be housed within a particular compartment(s) of the drawer **322** (e.g., based on their wired connectivity to the computing device **310**).

[0080] The medical instruments **330** include wireless medical instruments (illustratively, medical instruments **330-5**-**330-9**) that are communicatively connected to computing device **310** via wireless interfaces (e.g., using Bluetooth connections or other suitable wireless connections). For example, the wireless medical instruments **330**-*y* include a blood pressure monitor **330-5**, a pulse oximeter **330-6**, a glucometer **330-7**, a spirometer **330-8**, and a thermometer **330-9**.

[0081] It will be appreciated that fewer or more wireless medical instruments may be integrated within the telemedicine cart **300**.

[0082] FIG. **4** depicts an example of a telemedicine server configured to support a telemedicine platform configured to enable patients to obtain remote healthcare services from healthcare professionals.

[0083] The telemedicine server **400** of FIG. **4** is suitable for use as the telemedicine server **140** of FIG. **1**.

[0084] The telemedicine server **400** may be configured to support a telemedicine platform configured to support integration of the applications (e.g., the patient application and the healthcare professional application) and telemedicine devices in order to support various remote healthcare scenarios.

[0085] The telemedicine server **400** includes a processor **410**, a memory **420**, and an input-output (I/O) element **430**.

[0086] The processor **410** is communicatively connected to the memory **420** and the I/O element **430**. The processor **410** may be configured to perform processing in order to provide various functions of the telemedicine server **400** (e.g., retrieving instructions from the memory **420** and executing the instructions, retrieving information from memory **420** and processing the information, storing information in memory **420**, controlling communications with various other devices (e.g., patient devices, healthcare professional devices, telemedicine devices, or the like, as well as various combinations thereof), or the like, as well as various combinations thereof).

[0087] The memory **420** may be configured to store various instructions and information which may be used by processor **410** to provide various functions of the telemedicine server **400**. For example, the memory **420** may store patient-related instructions and information.

[0088] For example, the memory **420** may store patient application instructions **421** related to support of the patient application used by patients (e.g., the patient application presented with respect to FIGS. **5**A-**5**F). For example, the memory **420** may store patient information **422** for patients (e.g., personal information, medical history, medical consultation information, or the like, as well as various combinations thereof), which may be obtained from various sources (e.g., via the patient application, via the healthcare professional application, or the like, as well as various combinations thereof). It will be appreciated that, although presented as being stored in memory **420**, the patient information **422** for patients may be stored in other devices (e.g., other storage devices, databases such as telemedicine database **141** of FIG. **1**, or the like, as well as various combinations thereof). The memory **420** may store various other patient-related instructions and information.

[0089] For example, the memory **420** may store healthcare professional related instructions and information. For example, the memory **420** may store healthcare processional application instructions **423** related to support of the patient application used by patients (e.g., the healthcare professional application presented with respect to FIGS. **6**A-**6**D). For example, the memory **420** may store healthcare professional information **424** for healthcare professionals (e.g., personal information, medical credentials, consultation availability, or the like, as well as various combinations thereof), which may be obtained from various sources (e.g., via the healthcare processional application, via the patient application, or the like, as well as various combinations thereof). It will be appreciated that, although presented as being stored in memory **420**, the healthcare professional information **424** for patients may be stored in other devices (e.g., other storage devices, databases such as telemedicine database **141** of FIG. **1**, or the like, as well as various

combinations thereof). The memory **420** may store various other healthcare professional related instructions and information.

[0090] For example, the memory **420** may store interaction instructions **425**, which may include one or more of instructions related to interaction between the patient application and the healthcare professional application (e.g., for scheduling consultations, conducting consultations, or the like), instructions related to interaction between applications (e.g., the patient application and/or the healthcare professional application) and telemedicine devices (e.g., for guiding medical exams, for collecting information obtained during medical exams, for distributing information collected during medical exams, or the like), or the like, as well as various combinations thereof.

[0091] The memory **420** may store various other types of instructions and information related to performing various functions presented herein.

[0092] The I/O element **430** may be configured to support communications of the telemedicine server **400**. The communications may include various messages, requests, commands, information, or the like, as well as various combinations thereof. The communications of the telemedicine server **400** may include communications related to use of patient applications by patients, communications related to use of healthcare provider applications, communications related to collection and distribution of medical information based on use of telemedicine devices, or the like, as well as various combinations thereof.

[0093] The telemedicine server **400** may include various other elements configured to support various functions of the telemedicine server **400**.

[0094] FIGS. **5**A-**5**F depict examples of graphical user interfaces of a patient application configured for use by a patient to obtain remote healthcare services from a healthcare professional.

[0095] The patient application supporting the GUIs of FIGS. **5**A-**5**F may be running on the patient device **112** of FIG. **1**.

[0096] The patient application supporting the GUIs of FIGS. **5**A-**5**F is a user-friendly application configured to enable patients to manage their healthcare (e.g., managing their health records, consulting doctors remotely, or the like, as well as various combinations thereof). For example, the patient application supporting the GUIs of FIGS. **5**A-**5**F may be configured to enable a patient to securely store health records and history, find a doctor and schedule a video appointment, pay the doctor using a credit card or other form of payment, consult the doctor via a secure video call, and so forth. The various functions supported by the patient application may be further understood by considering the GUIs of FIGS. **5**A-**5**F.

[0097] The GUIs of the patient application become accessible to the user when the user accesses the patient application.

[0098] The GUIs of the patient application include a PATIENT GUI **510** (presented in FIG. **5**A), a CONSULTATIONS GUI **520** (presented in FIG. **5**B), a DOCTORS GUI **530** (presented in FIG. **5**C), a PAST MEDICAL HISTORY GUI **540** (presented in FIG. **5**D), a VITALS AND DIAGNOSTICS GUI **550** (presented in FIG. **5**E), and a NEW CONSULTATION REQUEST GUI **560** (presented in FIG. **5**F).

[0099] The GUIs of the patient application each include a menu portion **509** by which the user of the patient application may navigate between GUIs of the patient application. The menu portion **509** includes a PATIENT button **501** for navigation to the PATIENT GUI **510**, a CONSULTATIONS button **502** for navigation to the CONSULTATIONS GUI **520**, a DOCTORS button **503** for navigation to the DOCTORS GUI **530**, a PAST MEDICAL HISTORY button **504** for navigation to the PAST MEDICAL HISTORY GUI **540**, and a VITALS AND DIAGNOSTICS button **505** for navigation to the VITALS AND DIAGNOSTICS GUI **550**. It is noted that the user may navigate to the NEW CONSULTATION REQUEST GUI **560** from the DOCTORS GUI **530** (e.g., after selection of a doctor so that the patient may request a consultation with the selected doctor). The menu portion **509** also includes a SIGN OUT button **506**, by which the user may sign out of the patient application. It will be appreciated that the menu portion **509** may be arranged in other ways (e.g., a different ordering of the buttons), the menu portion **509** may include fewer or more buttons (as well as different buttons), or the like, as well as various combinations thereof.

[0100] The PATIENT GUI **510** may be configured to support entry and presentation of personal information of the patient. The PATIENT GUI **510** includes a profile picture **511**. The PATIENT GUI **510** includes various patient information fields **512** in which personal information of the patient may be presented and in which personal information of the patient may be added or modified. For example, the PATIENT GUI **510** may include various patient information fields **512** storing patient information such as patient username and password information for the patient application, patient name, patient date of birth, patient gender, patient address, patient contact information (e.g., phone number(s), email, or the like), preferred pharmacy, insurance information, or the like, as well as various combinations thereof. The PATIENT GUI **510** includes a button **513** configured to enable the patient to save information entered into the patient information fields **512**. The PATIENT GUI **510** includes a button **514** configured to enable the patient to add family members to his or her patient account. It will be appreciated that the PATIENT GUI **510** may be arranged in other ways, may include various other types of information or controls, or the like, as well as various combinations thereof.

[0101] The CONSULTATIONS GUI **520** may be configured to support consultations by the patient with doctors, enabling the patient to request new consultations and review previous consultations. The CONSULTATIONS GUI **520** presents each previous consultation of the patient, individually, using consultation icons **521**. The consultation icon **521** for a previous consultation includes a photo of the doctor consulted during that consultation, the name of the doctor consulted during that consultation, a consultation status indicator (e.g., COMPLETED to indicate that the consultation was completed or OPEN to indicate that the consultation has not yet been completed), and a date that the consultation was started. It will be appreciated that the consultation icons **521** may present less or more information (including different information). The consultation icons **521** are selectable to access a CONSULTATION DETAILS GUI (omitted for purposes of clarity). The CONSULTATION DETAILS GUI may include information such as the date and time of the consultation, doctor details of the doctor

consulted, symptoms identified and discussed during the consultation, report orders, prescriptions, doctor's notes, or the like, as well as various combinations thereof. The CONSULTATION DETAILS GUI also may include various control elements, such as control elements by which the patient may purchase a new consultation with the doctor, initiate an audio or video call with the doctor, or the like, as well as various combinations thereof. The CONSULTATIONS GUI **520** includes sort controls **522** by which the patient may sort the previous consultations and, thus, control the manner in which the consultation icons **521** are presented to the patient (e.g., sorting by date in ascending or descending order, sorting by doctor name in ascending or descending order, or the like). The CONSULTATIONS GUI **520** includes a new consultation request button **523** by which the patient may request a consultation with a doctor. The selection of the new consultation request button **523** results in display of the DOCTORS GUI **530**. It will be appreciated that the CONSULTATIONS GUI **520** may be arranged in other ways, may include various other types of information or controls, or the like, as well as various combinations thereof.

[0102] The DOCTORS GUI **530** may be configured to support consultations by the patient with doctors, enabling the patient to request new consultations. The DOCTORS GUI **530** may initially present preferred doctors of the patient (as illustrated in FIG. **5**C) or may not initially present any doctors until the patient request a list of potential doctors (omitted for purposes of clarity). The DOCTORS GUI **530** includes a set of doctor filter controls **531** by which the patient may specify parameters to be considered in determining a list of potential doctors for consultation by the patient. The doctor filter controls **531** may include various drop down menu, radio buttons, or the like. The doctor filter controls **531** may enable the patient to request potential doctors based on criteria such as area of specialty (e.g., options may include all specialties, family medicine, internal medicine, cardiology, oncology, and so forth), location (e.g., based on country, state, county, city, zip code, or the like), availability (e.g., whether or not the doctor is accepting new patients, whether or not the doctor is currently accepting consultation requests, or the like), including or excluding doctors from other locations (e.g., other cities, other states, other countries, or the like), or the like, as well as various combinations thereof. The DOCTORS GUI **530**, responsive to a request from the patient and based on the settings in the doctor filter controls **531**, presents each potential doctor which may be selected by the patient for consultation. The DOCTORS GUI **530** presents each potential doctor, individually, using doctor icons **532**. The doctor icon **521** for a potential doctor includes a photo of the doctor, an office address of the doctor, a hospital affiliation of the doctor, a specialty area of the doctor, or the like, as well as various combinations thereof. It will be appreciated that the doctor icons **532** may present less or more information (including different information). The doctor icons **532** are selectable to access a DOCTOR DETAILS GUI (omitted for purposes of clarity). The DOCTOR DETAILS GUI may include information such as the consultation fee charged by the doctor, a background description of the doctor, associated healthcare facilities of the doctor, educational background and certifications of the doctor, medical licensure information of the doctor, or the like, as well as various combinations thereof. The DOCTOR DETAILS GUI also may include various control elements, such as control elements by which the patient may save the doctor profile for later use, purchase a new consultation with the doctor, or the like, as well as various combinations thereof. The DOCTOR DETAILS GUI may include a CONSULT control element which, when selected, results in display of the NEW CONSULTATION REQUEST GUI of FIG. **5**F (discussed further below). It will be appreciated that the DOCTORS GUI **530** may be arranged in other ways, may include various other types of information or controls, or the like, as well as various combinations thereof.

[0103] The PAST MEDICAL HISTORY GUI **540** may be configured to support entry and presentation of past medical history of the patient. The PAST MEDICAL HISTORY GUI **540** includes various past medical history sections **541** in which past medical history information of the patient may be presented and in which past medical history information of the patient may be added or modified. For example, the PAST MEDICAL HISTORY GUI **540** includes a medications section **541-1** in which medications of the patient may be entered and presented. The medications section **541-1** may include a control element configured to support addition of medications to the medications section **541-1** (e.g., selection of the control element, such as a button or other control element, results in presentation of a window or GUI via which the patient may enter medication information for the medication, such as name, strength, directions, prescriber, date started, date ended, or the like, as well as various combinations thereof). The medications section **541-1** may include respective medication elements for the respective medications added to the medications section **541-1**, each of which may include information associated with prescription of the respective mediation to the patient (e.g., name, strength, directions, prescriber, date started, date ended, or the like, as well as various combinations thereof) and each of which may have a control element which, when selected, enables updates to or deletion of the respective medication elements. For example, the PAST MEDICAL HISTORY GUI **540** includes an allergies section **541-2** in which allergies of the patient may be entered and presented. The allergies section **541-2** may include a control element configured to support addition of allergies to the allergies section **541-2** (e.g., selection of the control element, such as a button or other control element, results in presentation of a window or GUI via which the patient may enter allergy information for the allergy, such as allergy type, reaction that results, date that allergy first started, or the like, as well as various combinations thereof). The allergies section **541-2** may include respective allergy elements for the respective allergies added to the allergies section **541-2**, each of which may include information associated with the patient allergy (e.g., allergy type, reaction that results, date that allergy first started, or the like, as well as various combinations thereof) and each of which may have a control element which, when selected, enables updates to or deletion of the respective allergies. For example, the PAST MEDICAL HISTORY GUI **540** includes a medical conditions section **541-3** in which medical conditions of the patient may be entered and presented. The medical conditions section **541-3** may include a control element configured to support addition of medical conditions to the medical conditions section **541-3** (e.g., selection of the control element, such as a button or other control element, results in presentation of a window or GUI via which the patient may enter medical condition

information for the medical condition, such as condition name, date that condition was first diagnosed, details regarding the condition, or the like, as well as various combinations thereof). The medical conditions section **541-3** may include respective medical condition elements for the respective medical conditions added to the medical conditions section **541-3**, each of which may include information associated with the medical condition of the patient (e.g., condition name, date that condition was first diagnosed, details regarding the condition, or the like, as well as various combinations thereof) and each of which may have a control element which, when selected, enables updates to or deletion of the respective medical conditions. For example, the PAST MEDICAL HISTORY GUI **540** includes a surgeries section **541-4** in which surgeries undergone by the patient may be entered and presented. The surgeries section **541-4** may include a control element configured to support addition of surgeries to the surgeries section **541-4** (e.g., selection of the control element, such as a button or other control element, results in presentation of a window or GUI via which the patient may enter surgery information for the surgery, such as surgery type, date, location, doctor comments, or the like, as well as various combinations thereof). The surgeries section **541-4** may include respective surgery elements for the respective surgeries added to the surgeries section **541-4**, each of which may include information associated with the surgery undergone by the patient (e.g., surgery type, date, location, doctor comments, or the like, as well as various combinations thereof) and each of which may have a control element which, when selected, enables updates to or deletion of the respective surgery. For example, the PAST MEDICAL HISTORY GUI **540** includes a family history section **541-5** in which family history of the patient may be entered and presented. The family history section **541-5** may include a control element configured to support addition of family history information to the family history section **541-5** (e.g., selection of the control element, such as a button or other control element, results in presentation of a window or GUI via which the patient may enter family history information for a family member, such as name, relationship to the patient, details regarding medical history relevant to the patient, or the like, as well as various combinations thereof). The family history section **541-5** may include respective family history elements for respective family members added to the family history section **541-5**, each of which may include information associated with the family member (e.g., name, relationship to the patient, details regarding medical history relevant to the patient, or the like, as well as various combinations thereof) and each of which may have a control element which, when selected, enables updates to or deletion of the respective family member and associated family history information for the respective family member. The social history section **541-6** may include a set of questions adapted to collect social history information of the patient. The social history section **541-6** may include respective social history question elements for respective questions which may be asked to obtain social history information from the patient, each of which may include an indication of the question and a set of answers selectable by the patient to answer the respective question (e.g., questions pertaining to smoking, alcohol consumption, drug use, eating habits, exercise habits, or the like, as well as various combinations thereof). It will be appreciated that the PAST MEDICAL HISTORY GUI **540** may be arranged in other ways, may include various other types of information or controls, or the like, as well as various combinations thereof.

[0104] The VITALS AND DIAGNOSTICS GUI **550** may be configured to support collection and presentation of various types of medical information of the patient. The VITALS AND DIAGNOSTICS GUI **550** includes a button **551** configured to enable the patient to initiate collection of medical information of the patient. The collection of the medical information of the patient may be in the form of entry of the information by the user or collection of the information from a medical instrument (e.g., a medical instrument of a patient device **112**, such as a medical instrument **230** of the telemedicine bag **200** of FIG. **2**, a medical instrument of **330** of the telemedicine cart **300** of FIG. **3**, or the like). The selection of the button **551** may result in display of a mechanism (e.g., a popup window, a separate GUI, or the like) by which the user may select the type of medical information (e.g., diagnostic type to be entered (e.g., height, weight, temperature, blood pressure, or the like, as well as various combinations thereof) or collected (e.g., a reading from a digital stethoscope, a picture or video from an examination camera, a reading from a digital otoscope, a reading from a digital iriscope, a reading from a blood pressure monitor, a reading from a pulse oximeter, a reading from a glucometer, a reading from a spirometer, a reading from a thermometer, a magnetic resonance image (MRI), a computed tomography (CT) scan, an electroencephalogram (EEG), an electrocardiogram (EKG), or the like, as well as various combinations thereof). The selection by the user of the type of medical information to be collected may then result in initiation of an action, which may vary based on whether the medical information is to be entered by the user or collected. For example, where the medical information is to be entered by the user, the selection by the user of the type of medical information to be collected may result in presentation of a mechanism (e.g., a popup window, a separate GUI, or the like) by which the user may enter the information. For example, where the medical information is to be collected from a medical instrument, the selection by the user of the type of medical information to be collected may result in initiation of a request or a command to a user (e.g., to the patient or another user of a patient device that has the corresponding medical instrument associated therewith) or to the patient device that has the corresponding medical instrument associated therewith. It will be appreciated that collection of medical information may include a combination of entry of medical information by a user and collection of medical information from one or more medical instruments. The VITALS AND

[0105] DIAGNOSTICS GUI **550** presents each previous medical information collection event, individually, using medical information icons **552**. The medical information icon **552** for a previous medical information collection event includes a title or description of the medical information collection event (e.g., vital signs, spirometry, x-ray, CBC report, and so forth) and the details of the medical information collection event which, it will be appreciated, may vary for different types of medical information collection events. For example, for a vital signs collection event, the medical information may include the date and time at which the vital signs were taken, the height and weight of the patient, the temperature and blood pressure of the patient, and the pule-ox, heart rate, and respiratory rate of the patient. For example, for a spirometry collection event, the medical

information may include the date and time at which the measurements were taken and the various spirometry measures taken (e.g., PEF, FEV1, FEV6, FEV1/FEV6, FEF, or the like). It will be understood that other medical information may be collected for other types of medical information collection events. It will be appreciated that the medical information icon **552** may present less or more information (including different information) for given medical information collection event types. The medical information icon **552** for a previous medical information collection event may be selectable in order to access a MEDICAL INFORMATION DETAILS GUI (omitted for purposes of clarity). The MEDICAL INFORMATION DETAILS GUI may include additional information for the associated medical information collection event. It will be appreciated that the VITALS AND DIAGNOSTICS GUI **550** may be arranged in other ways, may include various other types of information or controls, or the like, as well as various combinations thereof.

[0106] The NEW CONSULTATION REQUEST GUI **560** may be configured to support generation and submission of a new consultation request by the patient. The NEW CONSULTATION REQUEST GUI **560** includes various new consultation request sections **561** which form part of the new consultation request by the patient for a consultation with a doctor selected by the patient. For example, the NEW CONSULTATION REQUEST GUI **560** includes a doctor information section **561-1** in which information about the doctor is displayed (e.g., the profile picture, location, practice area, or the like). For example, the NEW CONSULTATION REQUEST GUI **560** includes an appointment information section **561-2** which provides an indication of the fee charged by the doctor for a remote consultation, an indication of the type of consultation (e.g., a secure video call with 3 days of messaging), and a capability by which the patient may select a date and time for the consultation (e.g., a SELECT DATE button which, when selected, opens a calendar window in which the patient may select the date and time for the consultation). For example, the NEW CONSULTATION REQUEST GUI **560** includes a symptoms section **561-3** in which symptoms of the patient may be entered and presented. The symptoms section **561-3** may include a control element configured to support addition of symptoms to the symptoms section **561-3** (e.g., selection of the control element, such as a button or other control element, results in presentation of a window or GUI via which the patient may enter symptom information for the symptom, such as symptom name, symptom severity, the date and time that the symptom started, the date and time that the symptom stopped, additional symptom description information, or the like, as well as various combinations thereof). The symptoms section **561-3** may include respective symptom elements for the respective symptoms added to the symptoms section **561-3**, each of which may include information associated with that symptom of the patient (e.g., symptom name, symptom severity, the date and time that the symptom started, the date and time that the symptom stopped, additional symptom description information, or the like, as well as various combinations thereof) and each of which may have a control element which, when selected, enables updates to or deletion of the respective symptom. For example, the NEW CONSULTATION REQUEST GUI **560** includes a past medical history section **561-4** in which past medical history information of the patient may be entered and presented. The past medical history information that is presented in the past medical history section **561-4**, where it already exists, may be pulled in automatically for the patient based on previous entry of the past medical history information via the PAST MEDICAL HISTORY GUI **540**. The past medical history information that is presented in the past medical history section **561-4**, where it does not already exist, may be entered by the patient in a manner similar to that described with respect entry of past medical history information via the PAST MEDICAL HISTORY GUI **540**. The past medical history information that is presented in the past medical history section **561-4**, where it already exists, may be modified or deleted by the patient. For example, the NEW CONSULTATION REQUEST GUI **560** includes a message section **561-5** in which the patient may enter a message for the doctor. The message section **561-5** may be provided in the form of a dialog box or other suitable graphical element. The patient may use message section **561-5** to enter any other information that the patient would like to provide to the doctor in advance of the consultation. For example, the NEW CONSULTATION REQUEST GUI **560** includes a payment section **561-6** in which the patient may enter payment information in order to pay the doctor for the consultation being scheduled (e.g., credit card information, debit card information, health saving account information, or the like, as well as various combinations thereof). The payment section **561-5** may be configured to enable the patient to enter payment information or select previously entered payment information. For example, the NEW CONSULTATION REQUEST GUI **560** includes a purchase section **561-7** by which the patient may complete the purchase of the remote consultation. The purchase section **561-7** may include an indication of a service fee charged for facilitating the scheduling and execution of the consultation, a mechanism for entering promo codes, an indication of the total amount to be charged to the patient (i.e., the doctor fee and service fee less any applied promo code), one or more controls enabling the patient to agree to various terms and conditions, and a SUBMIT button which enables the patient to submit the consultation request. It will be appreciated that the NEW CONSULTATION REQUEST GUI **560** may be arranged in other ways, may include various other types of information or controls, or the like, as well as various combinations thereof.

[0107] It will be appreciated that the various graphical user interfaces of FIGS. **5A-5F** provide improved user interfaces for electronic devices, improving the efficiency of use of electronic devices by users (e.g., patients, local healthcare professionals or others on behalf of patients, or the like) to perform various telemedicine-related functions (e.g., browsing doctors or other healthcare professionals, scheduling consultations with doctors or other healthcare professionals, paying for consultations with doctors or other healthcare professionals, conducting remote consultations with doctors or other healthcare professionals, consulting additional doctors or other healthcare professionals during consultations, managing and accessing health records, or the like, as well as various combinations thereof). The improved efficiency of use of electronic devices by users to perform these and other telemedicine-related functions may be provided based on use of various features of graphical user interfaces, such as menus, icons, buttons, or the like, as well as various combinations thereof.

[0108] It will be appreciated that, although primarily presented as being provided within the context of a patient

application, the graphical user interfaces of FIGS. **5**A-**5**F may be provided via a patient webpage (e.g., accessible via a web interface in which patients and healthcare professionals may access respective webpages).

[0109] It will be appreciated that the various types of information described in conjunction with the graphical user interfaces of FIGS. **5**A-**5**F may be stored in a patient account of the patient. The patient account of the patient may be maintained by the telemedicine server **140** (e.g., on the telemedicine server **140** or a database associated with the telemedicine server **140**, such as telemedicine database **141**). The patient account of the patient may be encrypted or secured in other ways. The patient information in the patient account is accessible to the patient via the patient application. The patient information in the patient account, or at least a portion thereof, may be accessible to a healthcare professional (e.g., via a healthcare professional application, such as the healthcare professional application presented with respect to FIGS. **6**A-**6**D). It is noted that a portion of the patient information in the patient account may be provided by a healthcare professional (e.g., via a healthcare professional application, such as the healthcare professional application presented with respect to FIGS. **6**A-**6**D). The telemedicine server **140** may be configured to control and facilitate access by healthcare professionals to the patient information in the patient account (e.g., patient contact information for scheduling consultations, patient medical history information for preparing for and conducting consultations, patient medical examination information for preparing for and conducting consultations, patient payment information for obtaining payment for services, or the like, as well as various combinations thereof).

[0110] FIGS. **6**A-**6**D depict examples of graphical user interfaces of a healthcare professional application configured for use by a healthcare professional to provide remote healthcare services to a patient.

[0111] The healthcare professional application supporting the GUIs of FIGS. **6**A-**6**D is a user-friendly application configured to enable healthcare professionals to offer remote medical consultations for their patients. For example, the healthcare professional application supporting the GUIs of FIGS. **6**A-**6**D may be configured to enable a healthcare professional to maintain a public profile so that patients can locate the healthcare professional, receive consultation requests from patients, review patient records and consult with patients via secure video calls, write electronic prescriptions and doctor's notes for patients, accept payment from patients electronically, and so forth. The various functions supported by the healthcare professional application may be further understood by considering the GUIs of FIGS. **6**A-**6**D.

[0112] The healthcare professional application supporting the GUIs of FIGS. **6**A-**6**D may be running on the healthcare professional device **122** of FIG. **1**.

[0113] The GUIs of the healthcare professional application become accessible to the healthcare professional when the healthcare professional accesses the healthcare professional application.

[0114] The GUIs of the healthcare professional application include a DOCTOR GUI **610** (presented in FIG. **6**A), a CONSULTATIONS GUI **620** (presented in FIG. **6**B), a PATIENTS GUI **630** (presented in FIG. **6**C), and a CALENDAR GUI **640** (presented in FIG. **6**D).

[0115] The GUIs of the healthcare professional application each include a menu portion **609** by which the healthcare professional using the healthcare professional application may navigate between GUIs of the healthcare professional application. The menu portion **609** includes a DOCTOR button **601** for navigating to the DOCTOR GUI **610**, a CONSULTATIONS button **602** for navigation to the CONSULTATIONS GUI **620**, a PATIENTS button **501** for navigation to the PATIENTS GUI **630**, and a CALENDAR button **604** for navigating to the CALENDAR GUI **640**. The menu portion **609** also includes a SIGN OUT button **605**, by which the healthcare professional may sign out of the healthcare professional application. It will be appreciated that the menu portion **609** may be arranged in other ways (e.g., a different ordering of the buttons), the menu portion **609** may include fewer or more buttons (as well as different buttons), or the like, as well as various combinations thereof.

[0116] The DOCTOR GUI **610** may be configured to support entry and presentation of personal information of the healthcare professional. The DOCTOR GUI **610** may be configured to enable the healthcare professional to enter and save a profile which will be presented to patients when searching for doctors for consultation. The DOCTOR GUI **610** includes various healthcare professional information sections **611** in which information of the healthcare professional may be presented and in which information of the healthcare professional may be added or modified. For example, the DOCTOR GUI **610** includes a basic information section **611-1**. The basic information section **611-1** may include a profile picture. The basic information section **611-1** includes healthcare professional information fields specifying information such as name, address, specialties, consultation fee, associated healthcare facilities, or the like. The DOCTOR GUI **610** includes a SAVE button configured to enable the healthcare professional to save information entered into the healthcare professional information fields of the basic information section **611-1** as well as information entered into other information sections **611** as discussed below. For example, the DOCTOR GUI **610** includes an education section **611-2** in which education information of the healthcare professional may be entered and presented. The education section **611-2** may include a control element configured to support addition of education information of the healthcare professional to the education section **611-2** (e.g., selection of the control element, such as a button or other control element, results in presentation of a window or GUI via which the healthcare professional may enter education information, such as schools, degrees, certifications, or the like, as well as various combinations thereof). The education section **611-2** may include respective education elements for the respective education achievements added to the education section **611-2**, each of which may include information associated with the education achievement (e.g., achievement type (e.g., degree, certification, or the like), name of the associated educational institution, dates attended, date achieved, or the like, as well as various combinations thereof) and each of which may have a control element which, when selected, enables updates to or deletion of the respective education elements. For example, the DOCTOR GUI **610** includes a medical licensure section **611-3** in which medical licensure information of the healthcare professional may be entered and presented. The medical licensure section **611-3** may include a control element configured to support addition of medical licensure infor-

mation of the healthcare professional to the medical licensure section **611-3** (e.g., selection of the control element, such as a button or other control element, results in presentation of a window or GUI via which the healthcare professional may enter medical licensure information, such as licenses held, dates awarded, or the like, as well as various combinations thereof). The medical licensure section **611-3** may include respective medical licensure elements for the respective licenses added to the medical licensure section **611-3**, each of which may include information associated with the respective license (e.g., license type, name of the associated educational institution, date awarded, or the like, as well as various combinations thereof) and each of which may have a control element which, when selected, enables updates to or deletion of the respective medical licensure elements. For example, the DOCTOR GUI **610** includes a professional information section **611-4** in which professional information of the healthcare professional (e.g., experience, affiliations, honors, or the like) may be entered and presented. The professional information section **611-4** may include a pair of control elements configured to support addition of professional information of the healthcare professional to the professional information section **611-4** (e.g., selection of a control element, such as a button or other control element, results in presentation of a window or GUI via which the healthcare professional may enter professional information, such as professional experiences, professional affiliations or honors, or the like, as well as various combinations thereof). The professional information section **611-4** may include respective professional information elements for the respective information added to the professional information section **611-4**, each of which may include professional information associated with the healthcare professional (e.g., professional experiences, professional affiliations or honors, or the like, as well as various combinations thereof) and each of which may have a control element which, when selected, enables updates to or deletion of the respective professional information elements. For example, the DOCTOR GUI **610** includes an additional information section **611-5** in which additional information of the healthcare professional (e.g., publications, presentations, or the like) may be entered and presented. The additional information section **611-5** may include a control element configured to support addition of additional information of the healthcare professional to the additional information section **611-5** (e.g., selection of a control element, such as a button or other control element, results in presentation of a window or GUI via which the healthcare professional may enter additional information, such as publications, presentations, or the like, as well as various combinations thereof). The additional information section **611-5** may include respective additional information elements for the respective information added to the additional information section **611-5**, each of which may include additional information associated with the healthcare professional (e.g., publications, presentations, or the like, as well as various combinations thereof) and each of which may have a control element which, when selected, enables updates to or deletion of the respective additional information elements. It will be appreciated that the DOCTOR GUI **610** may be arranged in other ways, may include various other types of information or controls, or the like, as well as various combinations thereof.

[0117] The CONSULTATIONS GUI **620** may be configured to support consultations by the healthcare professional with patients, enabling the healthcare professional to review scheduled consultations, review previous consultations, or the like, as well as various combinations thereof. The CONSULTATIONS GUI **620** presents each previous consultation of the healthcare professional, individually, using consultation icons **621**. The consultation icon **621** for a previous consultation includes a photo of the patient consulted during that consultation, the name of the patient consulted during that consultation, a consultation status indicator (e.g., COMPLETED to indicate that the consultation was completed or OPEN to indicate that the consultation has not yet been completed), and a date that the consultation was started. It will be appreciated that the consultation icons **621** may present less or more information (including different information). The consultation icons **621** are selectable to access a CONSULTATION DETAILS GUI (omitted for purposes of clarity). The CONSULTATION DETAILS GUI may include information such as the date and time of the consultation, patient details of the doctor consulted, symptoms identified and discussed during the consultation, report orders, prescriptions, doctor's notes, or the like, as well as various combinations thereof. The CONSULTATION DETAILS GUI also may include various control elements, such as control elements by which the healthcare professional may follow-up regarding a consultation with the patient, initiate an audio or video call with the patient, or the like, as well as various combinations thereof. The CONSULTATIONS GUI **620** includes sort controls **622** by which the healthcare professional may sort the previous consultations and, thus, control the manner in which the consultation icons **621** are presented to the healthcare professional (e.g., sorting by date in ascending or descending order, sorting by patient name in ascending or descending order, or the like). The CONSULTATIONS GUI **620** includes a show past consultations control element by which the healthcare professional may request that completed consultations be hidden or displayed. It will be appreciated that the CONSULTATIONS GUI **620** may be arranged in other ways, may include various other types of information or controls, or the like, as well as various combinations thereof.

[0118] The PATIENTS GUI **630** may be configured to provide the healthcare professional with access to information about patients of the healthcare professional. The PATIENTS GUI **630** presents each patient, individually, using patient icons **631**. The patient icon **631** a patient includes a photo of the patient, the date of birth of the patient, an address of the patient, or the like, as well as various combinations thereof. It will be appreciated that the patient icons **631** may present less or more information (including different information). The patient icons **631** are selectable to access a PATIENT DETAILS GUI (omitted for purposes of clarity). The PATIENT DETAILS GUI may include information such scheduled consultations, past consultations, medical history (e.g., medications, allergies, medical conditions, surgeries, social history, or the like), or the like, as well as various combinations thereof. It will be appreciated that the PATIENTS GUI **630** may be arranged in other ways, may include various other types of information or controls, or the like, as well as various combinations thereof.

[0119] The CALENDAR GUI **640** may be configured to enable the healthcare professional to review and manage his or her calendar (e.g., enter availability for consultations such

that patients may schedule consultations, review scheduled consultations, or the like, as well as various combinations thereof). The CALENDAR GUI **640** may support various views, such as a day view, a week view, a month view, or the like. It will be appreciated that the CALENDAR GUI **640** may be arranged in other ways, may include various other types of information or controls, or the like, as well as various combinations thereof.

[0120] It will be appreciated that the various graphical user interfaces of FIGS. **6**A-**6**D provide improved user interfaces for electronic devices, improving the efficiency of use of electronic devices by users (e.g., healthcare professionals or the like) to perform various telemedicine-related functions (e.g., reviewing requests for consultations from patients, scheduling consultations with patients, conducting remote consultations with patients, consulting additional doctors or other healthcare professionals during consultation, accessing patient health records, making notes and writing prescriptions, or the like, as well as various combinations thereof). The improved efficiency of use of electronic devices by users to perform these and other telemedicine-related functions may be provided based on use of various features of graphical user interfaces, such as menus, icons, buttons, or the like, as well as various combinations thereof.

[0121] It will be appreciated that, although primarily presented as being provided within the context of a healthcare professional application, the graphical user interfaces of FIGS. **6**A-**6**D may be provided via a healthcare professional webpage (e.g., accessible via a web interface in which healthcare professionals and patients may access respective webpages).

[0122] It will be appreciated that the various types of information described in conjunction with the graphical user interfaces of FIGS. **6**A-**6**D may be stored in a healthcare professional account of the healthcare professional. The healthcare professional account of the healthcare professional may be maintained by the telemedicine server **140** (e.g., on the telemedicine server **140** or a database associated with the telemedicine server **140**, such as telemedicine database **141**). The healthcare professional account of the healthcare professional may be encrypted or secured in other ways. The healthcare professional information in the healthcare professional account is accessible to the healthcare professional via the healthcare professional application. The healthcare professional information in the healthcare professional account, or at least a portion thereof, may be accessible to patients or potential patients (e.g., via a patient application, such as the patient application presented with respect to FIGS. **5**A-**5**F). It is noted that a portion of the healthcare professional information in the healthcare professional account may be provided by patients (e.g., via a patient application, such as the patient application presented with respect to FIGS. **5**A-**5**F). The telemedicine server **140** may be configured to control and facilitate access by patients to the healthcare professional information in the healthcare professional account (e.g., healthcare professional contact information for scheduling consultations, healthcare professional billing information for submitting payment for services, or the like, as well as various combinations thereof).

[0123] As discussed herein, the various devices, applications, and GUIs presented herein may be configured to support various processes associated with scheduling and execution of remote medical consultations of patients by healthcare professionals.

[0124] The remote healthcare capability may be configured to provide an integrated telemedicine platform that is configured to create various unique remote healthcare consultation capabilities. The integrated telemedicine platform, for a given patient to be able to obtain a remote medical consultation with a healthcare professional, may be composed of (1) the telemedicine server supporting the patient application for the patient and the healthcare professional application for the healthcare professional, including support for interaction between patient using the patient application and the healthcare professional using the healthcare professional application and (2) a telemedicine device (e.g., a telemedicine bag, a telemedicine cart, or the like) that is accessible to the patient.

[0125] The integrated telemedicine platform may be configured to support various functions which may be provided within various contexts (e.g., patient/healthcare professional interaction scenarios discussed herein or in other suitable situations). For example, functions supported by the integrated telemedicine platform may include any of the functions presented herein, such as functions for remotely connecting patients and healthcare professionals in a manner enabling remote consultations by the patients with the healthcare professionals without requiring the healthcare professionals to be in any particular location (e.g., healthcare professional call centers are not required) and without requiring patients to be in any particular location (e.g., patients can be at home, in community healthcare centers, or any other locations having telemedicine devices and being remote from the healthcare professionals), healthcare professional location functions for enabling patients to find and connect to healthcare professionals remotely, patient location functions for enabling healthcare professionals to find and connected to patients remotely, secure video calling capabilities, recording diagnostic device measurements automatically without manual data entry, remote upload of patient medical information (e.g., x-rays, MRIs, CT scans, EEGs, EKGs, blood reports, or the like) in order to provide a more detailed picture to the healthcare professional, real-time review of patient information (e.g., patient medical history, medical examination information, symptoms, or the like) while the video call is ongoing (thereby enabling the real feeling of an "in-person" type consultation), support for basic electronic medical record features (e.g., patient records, digital prescriptions, diagnostics, past medical history, doctor's notes, or the like), support for e-prescriptions (e.g., sending prescriptions electronically to the preferred pharmacy of the patient), support for follow-up consultations by the patient (e.g., with the doctor(s) of the patient, with the doctor(s) from a partner company, or the like), support for the healthcare professionals to consult specialists, support for applications that allow follow-up video visits by patients with doctors, mechanisms for patients to securely store their medical records for retrieval any time later, secure messaging between healthcare professionals and patients, mechanisms to offer continuing medical education to healthcare professionals and patients, or the like, as well as various combinations thereof.

[0126] In at least some embodiments, the integrated telemedicine platform may support remote consultation of a healthcare professional (e.g., doctor) by a patient when the

patient is unable to visit any health center (e.g., at home or in another location). The patient has a telemedicine device available. The telemedicine device or a user device of the user is running the patient application to enable interaction by the patient with a healthcare professional who is using the healthcare professional application. The patients selects a healthcare professional to consult from a list of available healthcare professional or identifies a consultation previously scheduled by the patient with the healthcare professional. The healthcare professional starts a video call with the patient or the patient starts a video call with the healthcare professional. The patient uses the telemedicine device to perform a physical exam under direction from the healthcare professional. The healthcare professional examines the patient remotely, viewing the patient's body (e.g., the patient's skin, throat, nose, eyes, or the like) via video (e.g., in 1080p HD), listening to the patient's body (e.g., the patient's heart and lung sounds), and so forth. The healthcare professional gets additional patient information (e.g., pressure, SpO2, blood glucose, temperature, spirometry, or the like) as needed. The healthcare professional makes an informed judgment based on the various types of patient information and informs the patient. The healthcare professional may then write digital prescriptions, doctor's notes, or the like, as needed.

[0127] In at least some embodiments, the integrated telemedicine platform may support remote consultation of a healthcare professional (e.g., doctor) by a patient when the patient visits a community health center (CHC). The patient visits the CHC. A medical assistant (MA) at the CHC selects the healthcare professional to consult from a list of available healthcare professionals. The healthcare professional starts a video call with MA, and sees and talks to the patient. The MA uses the telemedicine device at the CHC to perform a physical exam under direction from the healthcare professional. The healthcare professional examines the patient remotely, viewing the patient's body (e.g., the patient's skin, throat, nose, eyes, or the like) via video (e.g., in 1080p HD), listening to the patient's body (e.g., the patient's heart and lung sounds), and so forth. The healthcare professional gets additional patient information (e.g., pressure, SpO2, blood glucose, temperature, spirometry, or the like) as needed. The healthcare professional makes an informed judgment based on the various types of patient information and informs the patient. The healthcare professional may then write digital prescriptions, doctor's notes, or the like, as needed.

[0128] The integrated telemedicine platform may be configured to support various other interaction types (e.g. between various other people, based on use of various other devices or applications, or the like, as well as various combinations thereof).

[0129] FIG. **7** depicts an example embodiment of a method for use by an integrated telemedicine platform for supporting providing of remote healthcare services to a patient. It will be appreciated that, although primarily presented herein as being performed serially, at least a portion of the functions of method **700** may be performed contemporaneously or in a different order than as presented in FIG. **7**.

[0130] At block **710**, receive, from a patient application running on a patient user device, a request to schedule a video appointment with a healthcare professional.

[0131] At block **720**, send, toward a healthcare professional application running on a healthcare professional user device of the healthcare professional, an indication of the request to schedule the video appointment with the healthcare professional.

[0132] At block **730**, receive, from the healthcare professional application, an indication of an acceptance of the request to schedule the video appointment with the healthcare professional.

[0133] At block **740**, facilitate a video call between the healthcare professional user device and the patient user device.

[0134] At block **750**, receive, from a telemedicine device, medical examination information associated with the patient.

[0135] At block **760**, send, toward the healthcare professional application, the medical examination information associated with the patient.

[0136] At block **770**, send, toward the healthcare professional application, additional medical information associated with the patient.

[0137] At block **780**, receive, from the healthcare professional application, information related to diagnosis of the patient by the healthcare professional.

[0138] At block **799**, method **700** ends.

[0139] FIG. **8** depicts an example embodiment of a method for interaction by a user device with a patient care unit for supporting providing of remote healthcare services to a patient. It will be appreciated that, although primarily presented herein as being performed serially, at least a portion of the functions of method **800** may be performed contemporaneously or in a different order than as presented in FIG. **8**.

[0140] At block **801**, method **800** begins.

[0141] At block **810**, send, by a user device based on an application running on the user device toward a patient care unit associated with a patient, a request for collection of medical information of the patient.

[0142] At block **820**, receive, by the user device based on the application running on the user device from the patient care unit associated with the patient, medical examination information of the patient determined by the patient care unit for the patient.

[0143] At block **899**, method **800** ends.

[0144] FIG. **9** depicts an example embodiment of a method for interactions by a patient care unit for supporting providing of remote healthcare services to a patient. It will be appreciated that, although primarily presented herein as being performed serially, at least a portion of the functions of method **900** may be performed contemporaneously or in a different order than as presented in FIG. **9**.

[0145] At block **901**, method **900** begins.

[0146] At block **910**, receive, by a patient care unit from a user device based on an application running on the user device, a request for collection of medical information of the patient, wherein the request for collection of medical information of the patient specifies one or more types of medical examination information to be collected from the patient using the patient care unit.

[0147] At block **920**, control, by the patient care unit based on a medical examination information collection guidance control function of the patient care unit, collection of medical examination information of the patient.

[0148] At block **930**, send, by the patient care unit toward at least one of the user device or a server, the medical examination information of the patient.

[0149] At block **999**, method **900** ends.

[0150] FIG. **10** depicts an example of method configured for use by a patient application at a user device of a patient. It will be appreciated that, although primarily presented herein as being performed serially, at least a portion of the functions of method **1000** may be performed contemporaneously or in a different order than as presented in FIG. **10**.

[0151] At block **1001**, method **1000** begins.

[0152] At block **1010**, obtain, via an application running on a user device based on search criteria entered via the application running on the user device, a healthcare professional.

[0153] At block **1020**, schedule, via the application running on the user device and based on an indication that the healthcare professional is available, a video appointment with the healthcare professional.

[0154] At block **1030**, initiate, via the application running on the user device, payment of a fee to the healthcare professional for the video appointment scheduled with the healthcare professional.

[0155] At block **1040**, facilitate, via the application running on the user device, a secure video call with the healthcare professional.

[0156] At block **1099**, method **1000** ends.

[0157] FIG. **11** depicts an example of method configured for use by a healthcare professional application at a user device of a healthcare professional. It will be appreciated that, although primarily presented herein as being performed serially, at least a portion of the functions of method **1100** may be performed contemporaneously or in a different order than as presented in FIG. **11**.

[0158] At block **1101**, method **1100** begins.

[0159] At block **1110**, receive, via an application running on a user device of a healthcare professional, a consultation request from a patient for a video appointment with the healthcare professional.

[0160] At block **1120**, receive, via the application running on the user device of the healthcare professional, health history information of the patient and patient symptom information of the patient.

[0161] At block **1130**, receive, via the application running on the user device of the healthcare professional, an indication of a payment of a fee to the healthcare professional for the video appointment with the healthcare professional.

[0162] At block **1140**, facilitate, via the application running on the user device of the healthcare professional, a secure video call with the patient.

[0163] At block **1199**, method **1100** ends.

[0164] FIG. **12** depicts a high-level block diagram of a computer suitable for use in performing various functions described herein.

[0165] The computer **1200** includes a processor **1202** (e.g., a central processing unit (CPU), a processor having a set of one or more processor cores, or the like) and a memory **1204** (e.g., a random access memory (RAM), a read only memory (ROM), or the like). The processor **1202** and the memory **1204** are communicatively connected.

[0166] The computer **1200** also may include a cooperating element **1205**. The cooperating element **1205** may be a hardware device. The cooperating element **1205** may be a process that can be loaded into the memory **1204** and executed by the processor **1202** to implement functions as discussed herein (in which case, for example, the cooperating element **1205** (including associated data structures) can be stored on a non-transitory computer-readable storage medium, such as a storage device or other storage element (e.g., a magnetic drive, an optical drive, or the like)).

[0167] The computer **1200** also may include one or more input/output devices **1206**. The input/output devices **1206** may include one or more of a user input device (e.g., a keyboard, a keypad, a mouse, a microphone, a camera, or the like), a user output device (e.g., a display, a speaker, or the like), one or more network communication devices or elements (e.g., an input port, an output port, a receiver, a transmitter, a transceiver, or the like), one or more storage devices or elements (e.g., a tape drive, a floppy drive, a hard disk drive, a compact disk drive, or the like), or the like, as well as various combinations thereof. It will be appreciated that computer **1200** of FIG. **12** may represent a general architecture and functionality suitable for implementing functional elements described herein, portions of functional elements described herein, or the like, as well as various combinations thereof. For example, computer **1200** may provide a general architecture and functionality that is suitable for implementing one or more devices or elements presented herein, portions of one or more element presented herein, combinations of devices or elements presented herein, or the like, as well as various combinations thereof.

[0168] It will be appreciated that at least some of the functions presented herein may be implemented in software (e.g., via implementation of software on one or more processors, for executing on a general purpose computer (e.g., via execution by one or more processors) so as to provide a special purpose computer, and the like) and/or may be implemented in hardware (e.g., using a general purpose computer, one or more application specific integrated circuits (ASIC), and/or any other hardware equivalents).

[0169] It will be appreciated that at least some of the functions presented herein may be implemented within hardware, for example, as circuitry that cooperates with the processor to perform various functions. Portions of the functions/elements described herein may be implemented as a computer program product wherein computer instructions, when processed by a computer, adapt the operation of the computer such that the methods and/or techniques described herein are invoked or otherwise provided. Instructions for invoking the various methods may be stored in fixed or removable media (e.g., non-transitory computer-readable media), transmitted via a data stream in a broadcast or other signal bearing medium, and/or stored within a memory within a computing device operating according to the instructions.

[0170] It will be appreciated that the term "or" as used herein refers to a non-exclusive "or" unless otherwise indicated (e.g., use of "or else" or "or in the alternative").

[0171] It will be appreciated that, although various embodiments which incorporate the teachings presented herein have been shown and described in detail herein, those skilled in the art can readily devise many other varied embodiments that still incorporate these teachings.

What is claimed is:

1. An apparatus, the apparatus comprising:

at least one processor; and

at least one memory including computer program code;

wherein the at least one memory and the computer program code are configured to, with the at least one processor, cause the apparatus to at least:

receive, from a patient application running on a patient user device, a request to schedule a video appointment with a healthcare professional;

send, toward a healthcare professional application running on a healthcare professional user device of the healthcare professional, an indication of the request to schedule the video appointment with the healthcare professional;

receive, from the healthcare professional application, an indication of an acceptance of the request to schedule the video appointment with the healthcare professional;

facilitate a video call between the healthcare professional user device and the patient user device;

receive, from a telemedicine device, medical examination information associated with the patient;

send, toward the healthcare professional application, the medical examination information associated with the patient;

send, toward the healthcare professional application, additional medical information associated with the patient; and

receive, from the healthcare professional application, information related to diagnosis of the patient by the healthcare professional.

2. The apparatus of claim **1**, wherein the at least one memory and the computer program code are configured to, with the at least one processor, cause the apparatus to at least:

receive, from the patient application, healthcare professional filtering information;

determine, based on the healthcare professional filtering information, a list of available healthcare professionals; and

send, toward the patient application, the list of available healthcare professionals.

3. The apparatus of claim **1**, wherein the indication of the request to schedule the video appointment with the healthcare professional includes symptom information of the patient and payment information of the patient.

4. The apparatus of claim **1**, wherein the at least one memory and the computer program code are configured to, with the at least one processor, cause the apparatus to at least:

receive, from the healthcare professional application prior to the video call, a request for patient information associated with the patient; and

determine whether the healthcare professional is authorized to access the patient information associated with the patient; and

send, toward the healthcare professional application based on a determination that the healthcare professional is authorized to access the patient information associated with the patient, the patient information associated with the patient.

5. The apparatus of claim **4**, wherein the patient information includes at least one of medical history information of the patient, symptom information of the patient, or past medical examination information of the patient.

6. The apparatus of claim **1**, wherein the at least one memory and the computer program code are configured to, with the at least one processor, cause the apparatus to at least:

receive, from the healthcare professional application, a request for the medical examination information associated with the patient; and

send, toward the telemedicine device, a message indicative of the request for the medical examination information associated with the patient.

7. The apparatus of claim **6**, wherein the message indicative of the request for the medical examination information associated with the patient is configured to cause the telemedicine device to prompt an operator of the telemedicine device to initiate collection of the medical examination information associated with the patient.

8. The apparatus of claim **6**, wherein the message indicative of the request for the medical examination information associated with the patient is configured to cause the telemedicine device to initiate a series of medical examination information collection actions configured to collect respective types of medical examination information.

9. The apparatus of claim **1**, wherein the medical examination information includes at least one of video of a portion of a body of the patient, audio of a portion of the body of the patient, a temperature of the patient, a blood pressure reading of the patient, a pulse-ox reading of the patient, a blood glucose reading of the patient, or a spirometry reading of the patient.

10. The apparatus of claim **1**, wherein the at least one memory and the computer program code are configured to, with the at least one processor, cause the apparatus to at least:

receive, from the healthcare professional application, a request for the additional medical information; and

send the additional medical information toward the healthcare professional application based on the request for the additional medical information.

11. The apparatus of claim **1**, wherein the additional medical information includes at least one of an x-ray, a magnetic resonance image (MRI), a computed tomography (CT) scan, an electrocardiogram (EKG), or a blood report.

12. The apparatus of claim **1**, wherein the information related to diagnosis of the patient by the healthcare professional includes at least one of a diagnosis description to be associated with an account of the patient, a prescription, or a note.

13. The apparatus of claim **1**, wherein the information related to diagnosis of the patient by the healthcare professional includes a prescription, wherein the at least one memory and the computer program code are configured to, with the at least one processor, cause the apparatus to at least:

determine a preferred pharmacy of the patient; and

send the prescription toward a device of the preferred pharmacy of the patient.

14. A method, comprising:

receiving, from a patient application running on a patient user device, a request to schedule a video appointment with a healthcare professional;

sending, toward a healthcare professional application running on a healthcare professional user device of the healthcare professional, an indication of the request to schedule the video appointment with the healthcare professional;

receiving, from the healthcare professional application, an indication of an acceptance of the request to schedule the video appointment with the healthcare professional;

facilitating a video call between the healthcare professional user device and the patient user device;

receiving, from a telemedicine device, medical examination information associated with the patient;

sending, toward the healthcare professional application, the medical examination information associated with the patient;

sending, toward the healthcare professional application, additional medical information associated with the patient; and

receiving, from the healthcare professional application, information related to diagnosis of the patient by the healthcare professional.

15. A non-transitory computer readable medium comprising program instructions for causing an apparatus to at least:

receive, from a patient application running on a patient user device, a request to schedule a video appointment with a healthcare professional;

send, toward a healthcare professional application running on a healthcare professional user device of the healthcare professional, an indication of the request to schedule the video appointment with the healthcare professional;

receive, from the healthcare professional application, an indication of an acceptance of the request to schedule the video appointment with the healthcare professional;

facilitate a video call between the healthcare professional user device and the patient user device;

receive, from a telemedicine device, medical examination information associated with the patient;

send, toward the healthcare professional application, the medical examination information associated with the patient;

send, toward the healthcare professional application, additional medical information associated with the patient; and

receive, from the healthcare professional application, information related to diagnosis of the patient by the healthcare professional.

16. A patient care unit, comprising:

a portable housing including:

a first portion, the first portion including a computing device having a touch-sensitive display, a microphone, a speaker, and a set of communication interfaces;

a second portion configured to provide a base for the portable housing, the second portion including a set of receptacles configured to house a set of medical instruments, the set of medical instruments including a set of wired medical instruments and a set of wireless medical instruments;

a hinge pivotally connecting the first portion to the second portion to permit the first portion to pivot with respect to the second portion between a closed position and an open position; and

a wired medical instrument interface control element communicatively connected to the computing device;

the wired medical instrument interface control element configured to control interfacing between the wired medical instruments and the computing device;

the set of communication interfaces including a local wireless communication interface configured to support interfacing between the wireless medical instruments and the computing device.

17. The patient care unit of claim **16**, wherein the set of wired medical instruments includes at least one of a digital stethoscope, an examination camera, a digital otoscope, or a digital iriscope.

18. The patient care unit of claim **16**, wherein the wired medical instrument interface control element includes a set of communication interfaces configured to support wired connection of the respective wired medical instruments.

19. The patient care unit of claim **16**, wherein the wired medical instrument interface control element includes a communication interface configured to support a wired connection of the wired medical instrument interface control element to the computing device.

20. The patient care unit of claim **16**, wherein the wired medical instrument interface control element includes a set of buttons associated with the respective wired medical instruments.

21. The patient care unit of claim **16**, wherein the wired medical instrument interface control element includes a button associated with one of the wired medical instruments, wherein the wired medical instrument interface control element is configured to, responsive to detection of an actuation of the button, perform a control action associated with the one of the wired medical instruments.

22. The patient care unit of claim **21**, wherein the control action associated with the one of the medical instruments includes at least one of:

initializing the one of the medical instruments to enter a state in which the one of the medical instruments is configured to take a reading; or

initializing the computing device to enter a state in which the computing is configured to receive a reading from the one of the medical instruments.

23. The patient care unit of claim **16**, wherein the set of wireless medical instruments includes at least one of a blood pressure monitor, a pulse oximeter, a glucometer, a spirometer, or a thermometer.

24. The patient care unit of claim **16**, wherein the computing device includes a set of communication interfaces configured to support wireless connection of the respective wireless medical instruments to the computing device.

25. The patient care unit of claim **16**, wherein the computing device is configured to support display of a wireless medical instrument interface control element including a set of graphical objects associated with the respective wireless medical instruments.

* * * * *

专利名称(译)	远程医疗系统		
公开(公告)号	US20190320900A1	公开(公告)日	2019-10-24
申请号	US15/956199	申请日	2018-04-18
发明人	MAJMUDAR, MUKUL		
IPC分类号	A61B5/00 G16H40/67		
CPC分类号	G16H50/20 G16H10/60 G16H40/67 A61B5/0022 A61B5/01 A61B5/021 A61B5/055 A61B5/087 A61B5/14532 A61B5/14551 G16H20/30 G16H80/00		
外部链接	Espacenet USPTO		

摘要(译)

各种示例实施例通常涉及用于由医疗保健专业人员支持患者的远程医疗保健服务的远程医疗保健能力。可以在医疗保健服务系统的上下文中提供远程医疗保健能力。但是，远程医疗保健功能可以使远离医疗保健专业人员的患者（例如，在家中，疗养院中，紧急医疗设施中，农村地区等）能够从医疗保健专业人员处接收医疗保健服务。远程医疗保健功能可以包括远程医疗平台，该平台配置为支持远程医疗应用程序（例如，患者的患者应用程序和医疗保健专业人员的医疗保健专业应用程序）和远程医疗设备（例如，集成的患者护理套件，例如袋子，推车等），以支持各种远程保健方案，其中远离保健专业人员的患者能够从保健专业人员接收保健服务。