US010335614B2

(12) **United States Patent**
**Messerly et al.**

(10) **Patent No.: US 10,335,614 B2**
(45) **Date of Patent: *Jul. 2, 2019**

(54) **DEVICES AND TECHNIQUES FOR CUTTING AND COAGULATING TISSUE**

(71) Applicant: **Ethicon LLC**, Guaynabo, PR (US)

(72) Inventors: **Jeffrey D. Messerly**, Cincinnati, OH (US); **Eitan T. Wiener**, Cincinnati, OH (US); **Brian T. Noyes**, Montclair, NJ (US); **Jeffrey L. Aldridge**, Lebanon, OH (US); **James R. Giordano**, Milford, OH (US); **Robert J. Beetel, III**, Sunnyvale, CA (US); **Daniel J. Abbott**, Maple Valley, WA (US); **Matthew C. Miller**, Cincinnati, OH (US); **Jeffrey P. Wiley**, Milford, OH (US); **Nathan J. Price**, Albuquerque, NM (US); **Daniel W. Price**, Loveland, OH (US); **Robert L. Koch, Jr.**, Cincinnati, OH (US)

(73) Assignee: **Ethicon LLC**, Guaynabo, PR (US)

( * ) Notice: Subject to any disclaimer, the term of this patent is extended or adjusted under 35 U.S.C. 154(b) by 2 days.

This patent is subject to a terminal disclaimer.

(21) Appl. No.: **15/290,570**

(22) Filed: **Oct. 11, 2016**

(65) **Prior Publication Data**

US 2017/0095267 A1 Apr. 6, 2017

**Related U.S. Application Data**

(60) Continuation of application No. 14/664,233, filed on Mar. 20, 2015, now Pat. No. 9,504,855, which is a (Continued)

(51) **Int. Cl.**
***H01L 41/09*** (2006.01)
***A61N 7/00*** (2006.01)
(Continued)

(52) **U.S. Cl.**
CPC ..... ***A61N 7/00*** (2013.01); ***A61B 17/320092*** (2013.01); ***A61B 18/14*** (2013.01);
(Continued)

(58) **Field of Classification Search**
CPC .... A61N 7/02; A61B 17/320092; A61B 18/14
(Continued)

(56) **References Cited**

U.S. PATENT DOCUMENTS

969,528 A 9/1910 Disbrow
1,570,025 A 1/1926 Young
(Continued)

FOREIGN PATENT DOCUMENTS

AU 2003241752 A1 9/2003
CA 2535467 A1 4/1993
(Continued)

OTHER PUBLICATIONS

http://www.dotmed.com/listing/electrosurical-unit/ethicon/ultracision-g110-/1466724.
(Continued)

*Primary Examiner* — Thomas M Dougherty

(57) **ABSTRACT**

Various embodiments are directed to a method of driving an end effector coupled to an ultrasonic drive system of a surgical instrument. The method comprises generating at least one electrical signal. The at least one electrical signal is monitored against a first set of logic conditions. A first response is triggered when the first set of logic conditions is met. A parameter is determined from the at least one electrical signal.

**18 Claims, 41 Drawing Sheets**

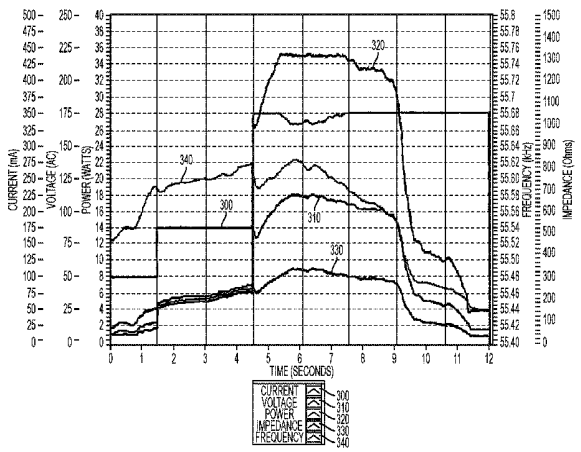

**Related U.S. Application Data**

division of application No. 12/896,351, filed on Oct. 1, 2010, now Pat. No. 9,089,360, which is a continuation-in-part of application No. 12/503,775, filed on Jul. 15, 2009, now Pat. No. 8,058,771.

(60) Provisional application No. 61/250,217, filed on Oct. 9, 2009, provisional application No. 61/188,790, filed on Aug. 13, 2008, provisional application No. 61/086,619, filed on Aug. 6, 2008.

(51) **Int. Cl.**

| | |
|---|---|
| ***A61B 17/32*** | (2006.01) |
| ***B06B 1/02*** | (2006.01) |
| ***G05B 15/02*** | (2006.01) |
| ***A61B 18/14*** | (2006.01) |
| ***A61N 7/02*** | (2006.01) |
| *A61B 5/053* | (2006.01) |
| *A61B 5/00* | (2006.01) |
| *A61B 17/00* | (2006.01) |
| *A61B 18/00* | (2006.01) |

(52) **U.S. Cl.**

CPC ..... ***A61N 7/02*** (2013.01); ***B06B 1/0284*** (2013.01); ***G05B 15/02*** (2013.01); *A61B 5/053* (2013.01); *A61B 5/4836* (2013.01); *A61B 2017/00026* (2013.01); *A61B 2017/00084* (2013.01); *A61B 2017/00176* (2013.01); *A61B 2017/00203* (2013.01); *A61B 2017/00973* (2013.01); *A61B 2018/00005* (2013.01); *A61B 2018/0063* (2013.01); *A61B 2018/00303* (2013.01); *A61B 2018/00589* (2013.01); *A61B 2018/00601* (2013.01); *A61B 2018/00666* (2013.01); *A61B 2018/00791* (2013.01); *A61B 2018/00845* (2013.01); *A61B 2018/00875* (2013.01); *A61B 2018/00994* (2013.01); *B06B 2201/76* (2013.01)

(58) **Field of Classification Search**

USPC ..... 310/316.01, 317–319

See application file for complete search history.

(56) **References Cited**

U.S. PATENT DOCUMENTS


| | | | |
|---|---|---|---|
| 1,813,902 | A | 7/1931 | Bovie |
| 2,188,497 | A | 1/1940 | Calva |
| 2,366,274 | A | 1/1945 | Luth et al. |
| 2,425,245 | A | 8/1947 | Johnson |
| 2,442,966 | A | 6/1948 | Wallace |
| 2,458,152 | A | 1/1949 | Eakins |
| 2,510,693 | A | 6/1950 | Green |
| 2,597,564 | A | 5/1952 | Bugg |
| 2,704,333 | A | 3/1955 | Calosi et al. |
| 2,736,960 | A | 3/1956 | Armstrong |
| 2,748,967 | A | 6/1956 | Roach |
| 2,845,072 | A | 7/1958 | Shafer |
| 2,849,788 | A | 9/1958 | Creek |
| 2,867,039 | A | 1/1959 | Zach |
| 2,874,470 | A | 2/1959 | Richards |
| 2,990,616 | A | 7/1961 | Balamuth et al. |
| RE25,033 | E | 8/1961 | Balamuth et al. |
| 3,015,961 | A | 1/1962 | Roney |
| 3,033,407 | A | 5/1962 | Alfons |
| 3,053,124 | A | 9/1962 | Balamuth et al. |
| 3,082,805 | A | 3/1963 | Royce |
| 3,166,971 | A | 1/1965 | Stoecker |
| 3,322,403 | A | 5/1967 | Murphy |
| 3,432,691 | A | 3/1969 | Shoh |
| 3,433,226 | A | 3/1969 | Boyd |
| 3,489,930 | A | 1/1970 | Shoh |
| 3,513,848 | A | 5/1970 | Winston et al. |
| 3,514,856 | A | 6/1970 | Camp et al. |
| 3,525,912 | A | 8/1970 | Wallin |
| 3,526,219 | A | 9/1970 | Balamuth |
| 3,554,198 | A | 1/1971 | Tatoian et al. |
| 3,580,841 | A | 5/1971 | Cadotte et al. |
| 3,606,682 | A | 9/1971 | Camp et al. |
| 3,614,484 | A | 10/1971 | Shoh |
| 3,616,375 | A | 10/1971 | Inoue |
| 3,629,726 | A | 12/1971 | Popescu |
| 3,636,943 | A | 1/1972 | Balamuth |
| 3,668,486 | A | 6/1972 | Silver |
| 3,702,948 | A | 11/1972 | Balamuth |
| 3,703,651 | A | 11/1972 | Blowers |
| 3,776,238 | A | 12/1973 | Peyman et al. |
| 3,777,760 | A | 12/1973 | Essner |
| 3,805,787 | A | 4/1974 | Banko |
| 3,809,977 | A | 5/1974 | Balamuth et al. |
| 3,830,098 | A | 8/1974 | Antonevich |
| 3,854,737 | A | 12/1974 | Gilliam, Sr. |
| 3,862,630 | A | 1/1975 | Balamuth |
| 3,875,945 | A | 4/1975 | Friedman |
| 3,885,438 | A | 5/1975 | Harris, Sr. et al. |
| 3,900,823 | A | 8/1975 | Sokal et al. |
| 3,918,442 | A | 11/1975 | Nikolaev et al. |
| 3,924,335 | A | 12/1975 | Balamuth et al. |
| 3,946,738 | A | 3/1976 | Newton et al. |
| 3,955,859 | A | 5/1976 | Stella et al. |
| 3,956,826 | A | 5/1976 | Perdreaux, Jr. |
| 4,005,714 | A | 2/1977 | Hiltebrandt |
| 4,012,647 | A | 3/1977 | Balamuth et al. |
| 4,034,762 | A | 7/1977 | Cosens et al. |
| 4,058,126 | A | 11/1977 | Leveen |
| 4,074,719 | A | 2/1978 | Semm |
| 4,156,187 | A | 5/1979 | Murry et al. |
| 4,167,944 | A | 9/1979 | Banko |
| 4,188,927 | A | 2/1980 | Harris |
| 4,200,106 | A | 4/1980 | Douvas et al. |
| 4,203,430 | A | 5/1980 | Takahashi |
| 4,203,444 | A | 5/1980 | Bonnell et al. |
| 4,220,154 | A | 9/1980 | Semm |
| 4,237,441 | A | 12/1980 | van Konynenburg et al. |
| 4,281,785 | A | 8/1981 | Brooks |
| 4,300,083 | A | 11/1981 | Heiges |
| 4,302,728 | A | 11/1981 | Nakamura |
| 4,304,987 | A | 12/1981 | van Konynenburg |
| 4,306,570 | A | 12/1981 | Matthews |
| 4,314,559 | A | 2/1982 | Allen |
| 4,445,063 | A | 4/1984 | Smith |
| 4,463,759 | A | 8/1984 | Garito et al. |
| 4,491,132 | A | 1/1985 | Aikins |
| 4,492,231 | A | 1/1985 | Auth |
| 4,494,759 | A | 1/1985 | Kieffer |
| 4,504,264 | A | 3/1985 | Kelman |
| 4,512,344 | A | 4/1985 | Barber |
| 4,526,571 | A | 7/1985 | Wuchinich |
| 4,535,773 | A | 8/1985 | Yoon |
| 4,541,638 | A | 9/1985 | Ogawa et al. |
| 4,545,374 | A | 10/1985 | Jacobson |
| 4,545,926 | A | 10/1985 | Fouts, Jr. et al. |
| 4,549,147 | A | 10/1985 | Kondo |
| 4,550,870 | A | 11/1985 | Krumme et al. |
| 4,553,544 | A | 11/1985 | Nomoto et al. |
| 4,562,838 | A | 1/1986 | Walker |
| 4,574,615 | A | 3/1986 | Bower et al. |
| 4,582,236 | A | 4/1986 | Hirose |
| 4,617,927 | A | 10/1986 | Manes |
| 4,633,119 | A | 12/1986 | Thompson |
| 4,634,420 | A | 1/1987 | Spinosa et al. |
| 4,640,279 | A | 2/1987 | Beard |
| 4,641,053 | A | 2/1987 | Takeda |
| 4,646,738 | A | 3/1987 | Trott |
| 4,646,756 | A | 3/1987 | Watmough et al. |
| 4,649,919 | A | 3/1987 | Thimsen et al. |
| 4,662,068 | A | 5/1987 | Polonsky |
| 4,674,502 | A | 6/1987 | Imonti |
| 4,694,835 | A | 9/1987 | Strand |
| 4,708,127 | A | 11/1987 | Abdelghani |
| 4,712,722 | A | 12/1987 | Hood et al. |

(56) **References Cited**

U.S. PATENT DOCUMENTS

4,735,603 A 4/1988 Goodson et al.
4,761,871 A 8/1988 O'Connor et al.
4,808,154 A 2/1989 Freeman
4,819,635 A 4/1989 Shapiro
4,827,911 A 5/1989 Broadwin et al.
4,830,462 A 5/1989 Karny et al.
4,832,683 A 5/1989 Idemoto et al.
4,836,186 A 6/1989 Scholz
4,838,853 A 6/1989 Parisi
4,844,064 A 7/1989 Thimsen et al.
4,849,133 A 7/1989 Yoshida et al.
4,850,354 A 7/1989 McGurk-Burleson et al.
4,852,578 A 8/1989 Companion et al.
4,860,745 A 8/1989 Farin et al.
4,862,890 A 9/1989 Stasz et al.
4,865,159 A 9/1989 Jamison
4,867,157 A 9/1989 McGurk-Burleson et al.
4,878,493 A 11/1989 Pasternak et al.
4,880,015 A 11/1989 Nierman
4,881,550 A 11/1989 Kothe
4,896,009 A 1/1990 Pawlowski
4,903,696 A 2/1990 Stasz et al.
4,910,389 A 3/1990 Sherman et al.
4,915,643 A 4/1990 Samejima et al.
4,920,978 A 5/1990 Colvin
4,922,902 A 5/1990 Wuchinich et al.
4,936,842 A 6/1990 D'Amelio et al.
4,954,960 A 9/1990 Lo et al.
4,965,532 A 10/1990 Sakurai
4,979,952 A 12/1990 Kubota et al.
4,981,756 A 1/1991 Rhandhawa
5,001,649 A 3/1991 Lo et al.
5,013,956 A 5/1991 Kurozumi et al.
5,015,227 A 5/1991 Broadwin et al.
5,020,514 A 6/1991 Heckele
5,026,370 A 6/1991 Lottick
5,026,387 A 6/1991 Thomas
5,035,695 A 7/1991 Weber, Jr. et al.
5,042,707 A 8/1991 Taheri
5,061,269 A 10/1991 Muller
5,084,052 A 1/1992 Jacobs
5,099,840 A 3/1992 Goble et al.
5,104,025 A 4/1992 Main et al.
5,105,117 A 4/1992 Yamaguchi
5,106,538 A 4/1992 Barma et al.
5,108,383 A 4/1992 White
5,109,819 A 5/1992 Custer et al.
5,112,300 A 5/1992 Ureche
5,113,139 A 5/1992 Furukawa
5,123,903 A 6/1992 Quaid et al.
5,126,618 A 6/1992 Takahashi et al.
D327,872 S 7/1992 McMills et al.
5,152,762 A 10/1992 McElhenney
5,156,633 A 10/1992 Smith
5,160,334 A 11/1992 Billings et al.
5,162,044 A 11/1992 Gahn et al.
5,163,421 A 11/1992 Bernstein et al.
5,163,537 A 11/1992 Radev
5,163,945 A 11/1992 Ortiz et al.
5,167,619 A 12/1992 Wuchinich
5,167,725 A 12/1992 Clark et al.
5,172,344 A 12/1992 Ehrlich
5,174,276 A 12/1992 Crockard
D332,660 S 1/1993 Rawson et al.
5,176,677 A 1/1993 Wuchinich
5,176,695 A 1/1993 Dulebohn
5,184,605 A 2/1993 Grzeszykowski
5,188,102 A 2/1993 Idemoto et al.
D334,173 S 3/1993 Liu et al.
5,190,517 A 3/1993 Zieve et al.
5,190,541 A 3/1993 Abele et al.
5,196,007 A 3/1993 Ellman et al.
5,205,459 A 4/1993 Brinkerhoff et al.
5,209,719 A 5/1993 Baruch et al.
5,213,569 A 5/1993 Davis
5,214,339 A 5/1993 Naito
5,217,460 A 6/1993 Knoepfler
5,218,529 A 6/1993 Meyer et al.
5,221,282 A 6/1993 Wuchinich
5,222,937 A 6/1993 Kagawa
5,226,909 A 7/1993 Evans et al.
5,226,910 A 7/1993 Kajiyama et al.
5,231,989 A 8/1993 Middleman et al.
5,234,428 A 8/1993 Kaufman
5,241,236 A 8/1993 Sasaki et al.
5,241,968 A 9/1993 Slater
5,242,339 A 9/1993 Thornton
5,242,460 A 9/1993 Klein et al.
5,246,003 A 9/1993 DeLonzor
5,254,129 A 10/1993 Alexander
5,257,988 A 11/1993 L'Esperance, Jr.
5,258,006 A 11/1993 Rydell et al.
5,261,922 A 11/1993 Hood
5,263,957 A 11/1993 Davison
5,264,925 A 11/1993 Shipp et al.
5,275,166 A 1/1994 Vaitekunas et al.
5,275,607 A 1/1994 Lo et al.
5,275,609 A 1/1994 Pingleton et al.
5,282,800 A 2/1994 Foshee et al.
5,282,817 A 2/1994 Hoogeboom et al.
5,285,795 A 2/1994 Ryan et al.
5,285,945 A 2/1994 Brinkerhoff et al.
5,290,286 A 3/1994 Parins
5,300,068 A 4/1994 Rosar et al.
5,304,115 A 4/1994 Pflueger et al.
D347,474 S 5/1994 Olson
5,307,976 A 5/1994 Olson et al.
5,309,927 A 5/1994 Welch
5,312,023 A 5/1994 Green et al.
5,312,425 A 5/1994 Evans et al.
5,318,563 A 6/1994 Malis et al.
5,318,564 A 6/1994 Eggers
5,318,589 A 6/1994 Lichtman
5,322,055 A 6/1994 Davison et al.
5,324,299 A 6/1994 Davison et al.
5,326,013 A 7/1994 Green et al.
5,326,342 A 7/1994 Pflueger et al.
5,330,471 A 7/1994 Eggers
5,330,502 A 7/1994 Hassler et al.
5,339,723 A 8/1994 Huitema
5,342,356 A 8/1994 Ellman et al.
5,342,359 A 8/1994 Rydell
5,344,420 A 9/1994 Hilal et al.
5,345,937 A 9/1994 Middleman et al.
5,346,502 A 9/1994 Estabrook et al.
5,353,474 A 10/1994 Good et al.
5,357,164 A 10/1994 Imabayashi et al.
5,357,423 A 10/1994 Weaver et al.
5,359,994 A 11/1994 Krauter et al.
5,361,583 A 11/1994 Huitema
5,366,466 A 11/1994 Christian et al.
5,368,557 A 11/1994 Nita et al.
5,370,645 A 12/1994 Klicek et al.
5,371,429 A 12/1994 Manna
5,374,813 A 12/1994 Shipp
D354,564 S 1/1995 Medema
5,381,067 A 1/1995 Greenstein et al.
5,383,874 A 1/1995 Jackson et al.
5,387,207 A 2/1995 Dyer et al.
5,387,215 A 2/1995 Fisher
5,389,098 A 2/1995 Tsuruta et al.
5,394,187 A 2/1995 Shipp
5,395,312 A 3/1995 Desai
5,395,363 A 3/1995 Billings et al.
5,395,364 A 3/1995 Anderhub et al.
5,396,266 A 3/1995 Brimhall
5,396,900 A 3/1995 Slater et al.
5,400,267 A 3/1995 Denen et al.
5,403,312 A 4/1995 Yates et al.
5,403,334 A 4/1995 Evans et al.
5,408,268 A 4/1995 Shipp
D358,887 S 5/1995 Feinberg
5,411,481 A 5/1995 Allen et al.
5,417,709 A 5/1995 Slater

(56) **References Cited**

U.S. PATENT DOCUMENTS

5,419,761 A 5/1995 Narayanan et al.
5,421,829 A 6/1995 Olichney et al.
5,423,844 A 6/1995 Miller
5,428,504 A 6/1995 Bhatla
5,429,131 A 7/1995 Scheinman et al.
5,438,997 A 8/1995 Sieben et al.
5,441,499 A 8/1995 Fritzsch
5,443,463 A 8/1995 Stern et al.
5,445,638 A 8/1995 Rydell et al.
5,445,639 A 8/1995 Kuslich et al.
5,449,370 A 9/1995 Vaitekunas
5,451,053 A 9/1995 Garrido
5,451,220 A 9/1995 Ciervo
5,451,227 A 9/1995 Michaelson
5,456,684 A 10/1995 Schmidt et al.
5,458,598 A 10/1995 Feinberg et al.
5,465,895 A 11/1995 Knodel et al.
5,471,988 A 12/1995 Fujio et al.
5,472,443 A 12/1995 Cordis et al.
5,476,479 A 12/1995 Green et al.
5,478,003 A 12/1995 Green et al.
5,480,409 A 1/1996 Riza
5,483,501 A 1/1996 Park et al.
5,484,436 A 1/1996 Eggers et al.
5,486,162 A 1/1996 Brumbach
5,486,189 A 1/1996 Mudry et al.
5,490,860 A 2/1996 Middle et al.
5,496,317 A 3/1996 Goble et al.
5,500,216 A 3/1996 Julian et al.
5,501,654 A 3/1996 Failla et al.
5,504,650 A 4/1996 Katsui et al.
5,505,693 A 4/1996 Mackool
5,507,297 A 4/1996 Slater et al.
5,507,738 A 4/1996 Ciervo
5,509,922 A 4/1996 Aranyi et al.
5,511,556 A 4/1996 DeSantis
5,520,704 A 5/1996 Castro et al.
5,522,839 A 6/1996 Pilling
5,527,331 A 6/1996 Kresch et al.
5,531,744 A 7/1996 Nardella et al.
5,540,681 A 7/1996 Strul et al.
5,540,693 A 7/1996 Fisher
5,542,916 A 8/1996 Hirsch et al.
5,548,286 A 8/1996 Craven
5,549,637 A 8/1996 Crainich
5,553,675 A 9/1996 Pitzen et al.
5,558,671 A * 9/1996 Yates ..... A61B 17/07207 606/34
5,562,609 A 10/1996 Brumbach
5,562,610 A 10/1996 Brumbach
5,562,659 A 10/1996 Morris
5,563,179 A 10/1996 Stone et al.
5,569,164 A 10/1996 Lurz
5,571,121 A 11/1996 Heifetz
5,573,424 A 11/1996 Poppe
5,573,534 A 11/1996 Stone
5,577,654 A 11/1996 Bishop
5,584,830 A 12/1996 Ladd et al.
5,591,187 A 1/1997 Dekel
5,593,414 A 1/1997 Shipp et al.
5,599,350 A 2/1997 Schulze et al.
5,600,526 A 2/1997 Russell et al.
5,601,601 A 2/1997 Tal et al.
5,603,773 A 2/1997 Campbell
5,607,436 A 3/1997 Pratt et al.
5,607,450 A 3/1997 Zvenyatsky et al.
5,609,573 A 3/1997 Sandock
5,611,813 A 3/1997 Lichtman
5,618,304 A 4/1997 Hart et al.
5,618,307 A 4/1997 Donlon et al.
5,618,492 A 4/1997 Auten et al.
5,620,447 A 4/1997 Smith et al.
5,624,452 A 4/1997 Yates
5,626,587 A 5/1997 Bishop et al.
5,626,595 A 5/1997 Sklar et al.
5,628,760 A 5/1997 Knoepfler
5,630,420 A 5/1997 Vaitekunas
5,632,432 A 5/1997 Schulze et al.
5,632,717 A 5/1997 Yoon
5,640,741 A 6/1997 Yano
D381,077 S 7/1997 Hunt
5,647,871 A 7/1997 Levine et al.
5,649,937 A 7/1997 Bito et al.
5,651,780 A 7/1997 Jackson et al.
5,653,713 A 8/1997 Michelson
5,655,100 A 8/1997 Ebrahim et al.
5,658,281 A 8/1997 Heard
5,662,662 A 9/1997 Bishop et al.
5,662,667 A 9/1997 Knodel
5,665,085 A 9/1997 Nardella
5,665,100 A 9/1997 Yoon
5,669,922 A 9/1997 Hood
5,674,219 A 10/1997 Monson et al.
5,674,220 A 10/1997 Fox et al.
5,674,235 A 10/1997 Parisi
5,678,568 A 10/1997 Uchikubo et al.
5,688,270 A 11/1997 Yates et al.
5,690,269 A 11/1997 Bolanos et al.
5,693,051 A 12/1997 Schulze et al.
5,694,936 A 12/1997 Fujimoto et al.
5,695,510 A 12/1997 Hood
5,700,261 A 12/1997 Brinkerhoff
5,704,534 A 1/1998 Huitema et al.
5,707,369 A * 1/1998 Vaitekunas ..... A61B 18/1442 606/27
5,709,680 A 1/1998 Yates et al.
5,711,472 A 1/1998 Bryan
5,713,896 A 2/1998 Nardella
5,715,817 A 2/1998 Stevens-Wright et al.
5,716,366 A 2/1998 Yates
5,717,306 A 2/1998 Shipp
5,720,742 A 2/1998 Zacharias
5,720,744 A 2/1998 Eggleston et al.
5,723,970 A 3/1998 Bell
5,728,130 A 3/1998 Ishikawa et al.
5,730,752 A 3/1998 Alden et al.
5,733,074 A 3/1998 Stock et al.
5,735,848 A 4/1998 Yates et al.
5,741,226 A 4/1998 Strukel et al.
5,743,906 A 4/1998 Parins et al.
5,752,973 A 5/1998 Kieturakis
5,755,717 A 5/1998 Yates et al.
5,762,255 A 6/1998 Chrisman et al.
5,766,164 A 6/1998 Mueller et al.
5,772,659 A 6/1998 Becker et al.
5,776,155 A 7/1998 Beaupre et al.
5,779,701 A 7/1998 McBrayer et al.
5,782,834 A 7/1998 Lucey et al.
5,792,135 A 8/1998 Madhani et al.
5,792,138 A 8/1998 Shipp
5,792,165 A 8/1998 Klieman et al.
5,796,188 A 8/1998 Bays
5,797,941 A 8/1998 Schulze et al.
5,797,958 A 8/1998 Yoon
5,797,959 A 8/1998 Castro et al.
5,800,432 A 9/1998 Swanson
5,800,449 A 9/1998 Wales
5,805,140 A 9/1998 Rosenberg et al.
5,807,393 A 9/1998 Williamson, IV et al.
5,808,396 A 9/1998 Boukhny
5,810,811 A 9/1998 Yates et al.
5,810,859 A 9/1998 DiMatteo et al.
5,817,033 A 10/1998 DeSantis et al.
5,817,084 A 10/1998 Jensen
5,817,093 A 10/1998 Williamson, IV et al.
5,817,119 A 10/1998 Klieman et al.
5,823,197 A 10/1998 Edwards
5,827,271 A 10/1998 Buysse et al.
5,827,323 A 10/1998 Klieman et al.
5,828,160 A 10/1998 Sugishita
5,833,696 A 11/1998 Whitfield et al.
5,836,897 A 11/1998 Sakurai et al.
5,836,909 A 11/1998 Cosmescu
5,836,943 A 11/1998 Miller, III

(56) **References Cited**

U.S. PATENT DOCUMENTS

5,836,957 A 11/1998 Schulz et al.
5,836,990 A 11/1998 Li
5,843,109 A 12/1998 Mehta et al.
5,851,212 A 12/1998 Zirps et al.
5,853,412 A 12/1998 Mayenberger
5,858,018 A 1/1999 Shipp et al.
5,865,361 A 2/1999 Milliman et al.
5,873,873 A 2/1999 Smith et al.
5,873,882 A 2/1999 Straub et al.
5,876,401 A 3/1999 Schulze et al.
5,878,193 A 3/1999 Wang et al.
5,879,364 A 3/1999 Bromfield et al.
5,880,668 A 3/1999 Hall
5,883,615 A 3/1999 Fago et al.
5,891,142 A 4/1999 Eggers et al.
5,893,835 A 4/1999 Witt et al.
5,897,523 A 4/1999 Wright et al.
5,897,569 A 4/1999 Kellogg et al.
5,903,607 A 5/1999 Tailliet
5,904,681 A 5/1999 West, Jr.
5,906,625 A 5/1999 Bito et al.
5,906,627 A 5/1999 Spaulding
5,906,628 A 5/1999 Miyawaki et al.
5,910,129 A 6/1999 Koblish et al.
5,911,699 A 6/1999 Anis et al.
5,913,823 A 6/1999 Hedberg et al.
5,916,229 A 6/1999 Evans
5,921,956 A 7/1999 Grinberg et al.
5,929,846 A 7/1999 Rosenberg et al.
5,935,143 A 8/1999 Hood
5,935,144 A 8/1999 Estabrook
5,938,633 A 8/1999 Beaupre
5,944,718 A 8/1999 Austin et al.
5,944,737 A 8/1999 Tsonton et al.
5,947,984 A 9/1999 Whipple
5,954,717 A 9/1999 Behl et al.
5,954,736 A 9/1999 Bishop et al.
5,954,746 A 9/1999 Holthaus et al.
5,957,882 A 9/1999 Nita et al.
5,957,943 A 9/1999 Vaitekunas
5,968,007 A 10/1999 Simon et al.
5,968,060 A 10/1999 Kellogg
5,974,342 A 10/1999 Petrofsky
D416,089 S 11/1999 Barton et al.
5,980,510 A 11/1999 Tsonton et al.
5,980,546 A 11/1999 Hood
5,984,938 A 11/1999 Yoon
5,989,274 A 11/1999 Davison et al.
5,989,275 A 11/1999 Estabrook et al.
5,993,465 A 11/1999 Shipp et al.
5,993,972 A 11/1999 Reich et al.
5,994,855 A 11/1999 Lundell et al.
6,003,517 A 12/1999 Sheffield et al.
6,013,052 A 1/2000 Durman et al.
6,024,741 A 2/2000 Williamson, IV et al.
6,024,744 A 2/2000 Kese et al.
6,024,750 A 2/2000 Mastri et al.
6,027,515 A 2/2000 Cimino
6,031,526 A 2/2000 Shipp
6,033,375 A 3/2000 Brumbach
6,033,399 A 3/2000 Gines
6,036,667 A 3/2000 Manna et al.
6,036,707 A 3/2000 Spaulding
6,039,734 A 3/2000 Goble
6,048,224 A 4/2000 Kay
6,050,943 A 4/2000 Slayton et al.
6,050,996 A 4/2000 Schmaltz et al.
6,051,010 A 4/2000 DiMatteo et al.
6,056,735 A 5/2000 Okada et al.
6,063,098 A 5/2000 Houser et al.
6,066,132 A 5/2000 Chen et al.
6,066,151 A 5/2000 Miyawaki et al.
6,068,627 A 5/2000 Orszulak et al.
6,068,629 A 5/2000 Haissaguerre et al.
6,068,647 A 5/2000 Witt et al.
6,074,389 A 6/2000 Levine et al.
6,077,285 A 6/2000 Boukhny
6,080,149 A 6/2000 Huang et al.
6,083,191 A 7/2000 Rose
6,086,584 A 7/2000 Miller
6,090,120 A 7/2000 Wright et al.
6,091,995 A 7/2000 Ingle et al.
6,096,033 A 8/2000 Tu et al.
6,099,483 A 8/2000 Palmer et al.
6,099,542 A 8/2000 Cohn et al.
6,099,550 A 8/2000 Yoon
6,109,500 A 8/2000 Alli et al.
6,110,127 A 8/2000 Suzuki
6,113,594 A 9/2000 Savage
6,117,152 A 9/2000 Huitema
H001904 H 10/2000 Yates et al.
6,126,629 A 10/2000 Perkins
6,126,658 A 10/2000 Baker
6,129,735 A 10/2000 Okada et al.
6,129,740 A 10/2000 Michelson
6,132,368 A 10/2000 Cooper
6,132,427 A 10/2000 Jones et al.
6,132,429 A 10/2000 Baker
6,132,448 A 10/2000 Perez et al.
6,139,320 A 10/2000 Hahn
6,139,561 A 10/2000 Shibata et al.
6,142,615 A 11/2000 Qiu et al.
6,142,994 A 11/2000 Swanson et al.
6,144,402 A 11/2000 Norsworthy et al.
6,147,560 A 11/2000 Erhage et al.
6,152,902 A 11/2000 Christian et al.
6,152,923 A 11/2000 Ryan
6,154,198 A 11/2000 Rosenberg
6,159,160 A 12/2000 Hsei et al.
6,159,175 A 12/2000 Strukel et al.
6,162,194 A 12/2000 Shipp
6,162,208 A 12/2000 Hipps
6,165,150 A 12/2000 Banko
6,174,309 B1 1/2001 Wrublewski et al.
6,174,310 B1 1/2001 Kirwan, Jr.
6,176,857 B1 1/2001 Ashley
6,179,853 B1 1/2001 Sachse et al.
6,183,426 B1 2/2001 Akisada et al.
6,187,003 B1 2/2001 Buysse et al.
6,190,386 B1 2/2001 Rydell
6,193,709 B1 2/2001 Miyawaki et al.
6,204,592 B1 3/2001 Hur
6,205,855 B1 3/2001 Pfeiffer
6,206,844 B1 3/2001 Reichel et al.
6,206,876 B1 3/2001 Levine et al.
6,210,337 B1 4/2001 Dunham et al.
6,210,402 B1 4/2001 Olsen et al.
6,210,403 B1 4/2001 Klicek
6,214,023 B1 4/2001 Whipple et al.
6,228,080 B1 5/2001 Gines
6,231,565 B1 5/2001 Tovey et al.
6,233,476 B1 5/2001 Strommer et al.
6,238,366 B1 5/2001 Savage et al.
6,245,065 B1 6/2001 Panescu et al.
6,251,110 B1 6/2001 Wampler
6,252,110 B1 6/2001 Uemura et al.
D444,365 S 7/2001 Bass et al.
D445,092 S 7/2001 Lee
D445,764 S 7/2001 Lee
6,254,623 B1 7/2001 Haibel, Jr. et al.
6,257,241 B1 7/2001 Wampler
6,258,034 B1 7/2001 Hanafy
6,259,230 B1 7/2001 Chou
6,267,761 B1 7/2001 Ryan
6,270,831 B2 8/2001 Kumar et al.
6,273,852 B1 8/2001 Lehe et al.
6,274,963 B1 8/2001 Estabrook et al.
6,277,115 B1 8/2001 Saadat
6,277,117 B1 8/2001 Tetzlaff et al.
6,278,218 B1 8/2001 Madan et al.
6,280,407 B1 8/2001 Manna et al.
6,283,981 B1 9/2001 Beaupre
6,287,344 B1 9/2001 Wampler et al.
6,290,575 B1 9/2001 Shipp

(56) **References Cited**

U.S. PATENT DOCUMENTS

6,292,700 B1 9/2001 Morrison et al.
6,299,591 B1 10/2001 Banko
6,306,131 B1 10/2001 Hareyama et al.
6,306,157 B1 10/2001 Shchervinsky
6,309,400 B2 10/2001 Beaupre
6,311,783 B1 11/2001 Harpell
6,319,221 B1 11/2001 Savage et al.
6,325,795 B1 12/2001 Lindemann et al.
6,325,799 B1 12/2001 Goble
6,325,811 B1 12/2001 Messerly
6,328,751 B1 12/2001 Beaupre
6,332,891 B1 12/2001 Himes
6,338,657 B1 1/2002 Harper et al.
6,340,352 B1 1/2002 Okada et al.
6,340,878 B1 1/2002 Oglesbee
6,350,269 B1 2/2002 Shipp et al.
6,352,532 B1 3/2002 Kramer et al.
6,356,224 B1 3/2002 Wohlfarth
6,358,246 B1 3/2002 Behl et al.
6,358,264 B2 3/2002 Banko
6,364,888 B1 4/2002 Niemeyer et al.
6,379,320 B1 4/2002 Lafon et al.
D457,958 S 5/2002 Dycus et al.
6,383,194 B1 5/2002 Pothula
6,384,690 B1 5/2002 Wilhelmsson et al.
6,387,109 B1 5/2002 Davison et al.
6,388,657 B1 5/2002 Natoli
6,390,973 B1 5/2002 Ouchi
6,391,026 B1 5/2002 Hung et al.
6,391,042 B1 5/2002 Cimino
6,398,779 B1 6/2002 Buysse et al.
6,402,743 B1 6/2002 Orszulak et al.
6,402,748 B1 6/2002 Schoenman et al.
6,405,733 B1 6/2002 Fogarty et al.
6,409,722 B1 6/2002 Hoey et al.
H002037 H 7/2002 Yates et al.
6,416,486 B1 7/2002 Wampler
6,419,675 B1 7/2002 Gallo, Sr.
6,423,073 B2 7/2002 Bowman
6,423,082 B1 7/2002 Houser et al.
6,425,906 B1 7/2002 Young et al.
6,428,538 B1 8/2002 Blewett et al.
6,428,539 B1 8/2002 Baxter et al.
6,430,446 B1 8/2002 Knowlton
6,432,118 B1 8/2002 Messerly
6,436,114 B1 8/2002 Novak et al.
6,436,115 B1 8/2002 Beaupre
6,440,062 B1 8/2002 Ouchi
6,443,968 B1 9/2002 Holthaus et al.
6,443,969 B1 9/2002 Novak et al.
6,449,006 B1 9/2002 Shipp
6,454,781 B1 9/2002 Witt et al.
6,454,782 B1 9/2002 Schwemberger
6,458,128 B1 10/2002 Schulze
6,458,142 B1 10/2002 Faller et al.
6,464,689 B1 10/2002 Qin et al.
6,464,702 B2 10/2002 Schulze et al.
6,468,270 B1 10/2002 Hovda et al.
6,475,215 B1 11/2002 Tanrisever
6,480,796 B2 11/2002 Wiener
6,485,490 B2 11/2002 Wampler et al.
6,491,690 B1 12/2002 Goble et al.
6,491,701 B2 12/2002 Tierney et al.
6,491,708 B2 12/2002 Madan et al.
6,497,715 B2 12/2002 Satou
6,500,112 B1 12/2002 Khouri
6,500,176 B1 12/2002 Truckai et al.
6,500,188 B2 12/2002 Harper et al.
6,500,312 B2 12/2002 Wedekamp
6,503,248 B1 1/2003 Levine
6,506,208 B2 1/2003 Hunt et al.
6,511,478 B1 1/2003 Burnside et al.
6,511,480 B1 1/2003 Tetzlaff et al.
6,511,493 B1 1/2003 Moutafis et al.
6,514,252 B2 2/2003 Nezhat et al.
6,514,267 B2 2/2003 Jewett
6,517,565 B1 2/2003 Whitman et al.
6,524,251 B2 2/2003 Rabiner et al.
6,524,316 B1 2/2003 Nicholson et al.
6,527,736 B1 3/2003 Attinger et al.
6,531,846 B1 3/2003 Smith
6,533,784 B2 3/2003 Truckai et al.
6,537,272 B2 3/2003 Christopherson et al.
6,537,291 B2 3/2003 Friedman et al.
6,543,452 B1 4/2003 Lavigne
6,543,456 B1 4/2003 Freeman
6,544,260 B1 4/2003 Markel et al.
6,551,309 B1 4/2003 LePivert
6,554,829 B2 4/2003 Schulze et al.
6,558,376 B2 5/2003 Bishop
6,561,983 B2 5/2003 Cronin et al.
6,562,035 B1 5/2003 Levin
6,562,037 B2 5/2003 Paton et al.
6,565,558 B1 5/2003 Lindenmeier et al.
6,572,563 B2 6/2003 Ouchi
6,572,632 B2 6/2003 Zisterer et al.
6,572,639 B1 6/2003 Ingle et al.
6,575,969 B1 6/2003 Rittman, III et al.
6,582,427 B1 6/2003 Goble et al.
6,582,451 B1 6/2003 Marucci et al.
6,584,360 B2 6/2003 Francischelli et al.
D477,408 S 7/2003 Bromley
6,585,735 B1 7/2003 Frazier et al.
6,588,277 B2 7/2003 Giordano et al.
6,589,200 B1 7/2003 Schwemberger et al.
6,589,239 B2 7/2003 Khandkar et al.
6,590,733 B1 7/2003 Wilson et al.
6,599,288 B2 7/2003 Maguire et al.
6,602,252 B2 8/2003 Mollenauer
6,607,540 B1 8/2003 Shipp
6,610,059 B1 8/2003 West, Jr.
6,610,060 B2 8/2003 Mulier et al.
6,611,793 B1 8/2003 Burnside et al.
6,616,450 B2 9/2003 Mossle et al.
6,619,529 B2 9/2003 Green et al.
6,620,161 B2 9/2003 Schulze et al.
6,622,731 B2 9/2003 Daniel et al.
6,623,482 B2 9/2003 Pendekanti et al.
6,623,500 B1 9/2003 Cook et al.
6,623,501 B2 9/2003 Heller et al.
6,626,848 B2 9/2003 Neuenfeldt
6,626,926 B2 9/2003 Friedman et al.
6,629,974 B2 10/2003 Penny et al.
6,633,234 B2 10/2003 Wiener et al.
6,635,057 B2 10/2003 Harano et al.
6,644,532 B2 11/2003 Green et al.
6,651,669 B1 11/2003 Burnside
6,652,513 B2 11/2003 Panescu et al.
6,652,539 B2 11/2003 Shipp et al.
6,652,545 B2 11/2003 Shipp et al.
6,656,132 B1 12/2003 Ouchi
6,656,177 B2 12/2003 Truckai et al.
6,656,198 B2 12/2003 Tsonton et al.
6,660,017 B2 12/2003 Beaupre
6,662,127 B2 12/2003 Wiener et al.
6,663,941 B2 12/2003 Brown et al.
6,666,860 B1 12/2003 Takahashi
6,666,875 B1 12/2003 Sakurai et al.
6,669,690 B1 12/2003 Okada et al.
6,669,710 B2 12/2003 Moutafis et al.
6,673,248 B2 1/2004 Chowdhury
6,676,660 B2 1/2004 Wampler et al.
6,678,621 B2 1/2004 Wiener et al.
6,679,875 B2 1/2004 Honda et al.
6,679,882 B1 1/2004 Kornerup
6,679,899 B2 1/2004 Wiener et al.
6,682,501 B1 1/2004 Nelson et al.
6,682,544 B2 1/2004 Mastri et al.
6,685,700 B2 2/2004 Behl et al.
6,685,701 B2 2/2004 Orszulak et al.
6,685,703 B2 2/2004 Pearson et al.
6,689,145 B2 2/2004 Lee et al.
6,689,146 B1 2/2004 Himes
6,690,960 B2 2/2004 Chen et al.

(56) **References Cited**

U.S. PATENT DOCUMENTS

6,695,840 B2 2/2004 Schulze
6,702,821 B2 3/2004 Bonutti
6,716,215 B1 4/2004 David et al.
6,719,692 B2 4/2004 Kleffner et al.
6,719,765 B2 4/2004 Bonutti
6,719,776 B2 4/2004 Baxter et al.
6,722,552 B2 4/2004 Fenton, Jr.
6,723,091 B2 4/2004 Goble et al.
D490,059 S 5/2004 Conway et al.
6,731,047 B2 5/2004 Kauf et al.
6,733,498 B2 5/2004 Paton et al.
6,733,506 B1 5/2004 McDevitt et al.
6,736,813 B2 5/2004 Yamauchi et al.
6,739,872 B1 5/2004 Turri
6,740,079 B1 5/2004 Eggers et al.
D491,666 S 6/2004 Kimmell et al.
6,743,245 B2 6/2004 Lobdell
6,746,284 B1 6/2004 Spink, Jr.
6,746,443 B1 6/2004 Morley et al.
6,752,815 B2 6/2004 Beaupre
6,755,825 B2 6/2004 Shoenman et al.
6,761,698 B2 7/2004 Shibata et al.
6,762,535 B2 7/2004 Take et al.
6,766,202 B2 7/2004 Underwood et al.
6,770,072 B1 8/2004 Truckai et al.
6,773,409 B2 8/2004 Truckai et al.
6,773,435 B2 8/2004 Schulze et al.
6,773,443 B2 8/2004 Truwit et al.
6,773,444 B2 8/2004 Messerly
6,775,575 B2 8/2004 Bommannan et al.
6,778,023 B2 8/2004 Christensen
6,783,524 B2 8/2004 Anderson et al.
6,786,382 B1 9/2004 Hoffman
6,786,383 B2 9/2004 Stegelmann
6,789,939 B2 9/2004 Schrodinger et al.
6,790,173 B2 9/2004 Saadat et al.
6,790,216 B1 9/2004 Ishikawa
6,794,027 B1 9/2004 Araki et al.
6,796,981 B2 9/2004 Wham et al.
D496,997 S 10/2004 Dycus et al.
6,800,085 B2 10/2004 Selmon et al.
6,802,843 B2 10/2004 Truckai et al.
6,808,525 B2 10/2004 Latterell et al.
6,809,508 B2 10/2004 Donofrio
6,810,281 B2 10/2004 Brock et al.
6,811,842 B1 11/2004 Ehrnsperger et al.
6,814,731 B2 11/2004 Swanson
6,819,027 B2 11/2004 Saraf
6,821,273 B2 11/2004 Mollenauer
6,827,712 B2 12/2004 Tovey et al.
6,828,712 B2 12/2004 Battaglin et al.
6,835,082 B2 12/2004 Gonnering
6,835,199 B2 12/2004 McGuckin, Jr. et al.
6,840,938 B1 1/2005 Morley et al.
6,843,789 B2 1/2005 Goble
6,849,073 B2 2/2005 Hoey et al.
6,860,878 B2 3/2005 Brock
6,860,880 B2 3/2005 Treat et al.
6,863,676 B2 3/2005 Lee et al.
6,866,671 B2 3/2005 Tierney et al.
6,869,439 B2 3/2005 White et al.
6,875,220 B2 4/2005 Du et al.
6,877,647 B2 4/2005 Green et al.
6,882,439 B2 4/2005 Ishijima
6,887,209 B2 5/2005 Kadziauskas et al.
6,887,252 B1 5/2005 Okada et al.
6,893,435 B2 5/2005 Goble
6,898,536 B2 5/2005 Wiener et al.
6,899,685 B2 5/2005 Kermode et al.
6,905,497 B2 6/2005 Truckai et al.
6,908,463 B2 6/2005 Treat et al.
6,908,472 B2 6/2005 Wiener et al.
6,913,579 B2 7/2005 Truckai et al.
6,915,623 B2 7/2005 Dey et al.
6,923,804 B2 8/2005 Eggers et al.
6,923,806 B2 8/2005 Hooven et al.
6,926,712 B2 8/2005 Phan
6,926,716 B2 8/2005 Baker et al.
6,926,717 B1 8/2005 Garito et al.
6,929,602 B2 8/2005 Hirakui et al.
6,929,622 B2 8/2005 Chian
6,929,632 B2 8/2005 Nita et al.
6,929,644 B2 8/2005 Truckai et al.
6,933,656 B2 8/2005 Matsushita et al.
D509,589 S 9/2005 Wells
6,942,660 B2 9/2005 Pantera et al.
6,942,677 B2 9/2005 Nita et al.
6,945,981 B2 9/2005 Donofrio et al.
6,946,779 B2 9/2005 Birgel
6,948,503 B2 9/2005 Refior et al.
6,953,461 B2 10/2005 McClurken et al.
D511,145 S 11/2005 Donofrio et al.
6,974,450 B2 12/2005 Weber et al.
6,976,844 B2 12/2005 Hickok et al.
6,976,969 B2 12/2005 Messerly
6,977,495 B2 12/2005 Donofrio
6,979,332 B2 12/2005 Adams
6,981,628 B2 1/2006 Wales
6,984,220 B2 1/2006 Wuchinich
6,988,295 B2 1/2006 Tillim
6,994,708 B2 2/2006 Manzo
6,994,709 B2 2/2006 Iida
7,000,818 B2 2/2006 Shelton, IV et al.
7,001,335 B2 2/2006 Adachi et al.
7,001,379 B2 2/2006 Behl et al.
7,001,382 B2 2/2006 Gallo, Sr.
7,011,657 B2 3/2006 Truckai et al.
7,014,638 B2 3/2006 Michelson
7,025,732 B2 4/2006 Thompson et al.
7,033,357 B2 4/2006 Baxter et al.
7,037,306 B2 5/2006 Podany et al.
7,041,083 B2 5/2006 Chu et al.
7,041,088 B2 5/2006 Nawrocki et al.
7,041,102 B2 5/2006 Truckai et al.
7,044,949 B2 5/2006 Orszulak et al.
7,052,496 B2 5/2006 Yamauchi
7,055,731 B2 6/2006 Shelton, IV et al.
7,063,699 B2 6/2006 Hess et al.
7,066,893 B2 6/2006 Hibner et al.
7,066,895 B2 6/2006 Podany
7,066,936 B2 6/2006 Ryan
7,070,597 B2 7/2006 Truckai et al.
7,074,218 B2 7/2006 Washington et al.
7,074,219 B2 7/2006 Levine et al.
7,077,039 B2 7/2006 Gass et al.
7,077,845 B2 7/2006 Hacker et al.
7,077,853 B2 7/2006 Kramer et al.
7,083,618 B2 8/2006 Couture et al.
7,083,619 B2 8/2006 Truckai et al.
7,087,054 B2 8/2006 Truckai et al.
7,090,672 B2 8/2006 Underwood et al.
7,094,235 B2 8/2006 Francischelli
7,101,371 B2 9/2006 Dycus et al.
7,101,372 B2 9/2006 Dycus et al.
7,101,373 B2 9/2006 Dycus et al.
7,101,378 B2 9/2006 Salameh et al.
7,104,834 B2 9/2006 Robinson et al.
7,108,695 B2 9/2006 Witt et al.
7,111,769 B2 9/2006 Wales et al.
7,112,201 B2 9/2006 Truckai et al.
D531,311 S 10/2006 Guerra et al.
7,117,034 B2 10/2006 Kronberg
7,118,564 B2 10/2006 Ritchie et al.
7,118,570 B2 10/2006 Tetzlaff et al.
7,124,932 B2 10/2006 Isaacson et al.
7,125,409 B2 10/2006 Truckai et al.
7,128,720 B2 10/2006 Podany
7,131,860 B2 11/2006 Sartor et al.
7,131,970 B2 11/2006 Moses et al.
7,135,018 B2 11/2006 Ryan et al.
7,135,030 B2 11/2006 Schwemberger et al.
7,137,980 B2 11/2006 Buysse et al.
7,143,925 B2 12/2006 Shelton, IV et al.
7,144,403 B2 12/2006 Booth

(56) **References Cited**

U.S. PATENT DOCUMENTS

7,147,138 B2 12/2006 Shelton, IV
7,153,315 B2 12/2006 Miller
D536,093 S 1/2007 Nakajima et al.
7,156,189 B1 1/2007 Bar-Cohen et al.
7,156,846 B2 1/2007 Dycus et al.
7,156,853 B2 1/2007 Muratsu
7,157,058 B2 1/2007 Marhasin et al.
7,159,750 B2 1/2007 Racenet et al.
7,160,296 B2 1/2007 Pearson et al.
7,160,298 B2 1/2007 Lawes et al.
7,160,299 B2 1/2007 Baily
7,163,548 B2 1/2007 Stulen et al.
7,169,144 B2 1/2007 Hoey et al.
7,169,146 B2 1/2007 Truckai et al.
7,169,156 B2 1/2007 Hart
7,179,254 B2 2/2007 Pendekanti et al.
7,179,271 B2 2/2007 Friedman et al.
7,186,253 B2 3/2007 Truckai et al.
7,189,233 B2 3/2007 Truckai et al.
7,195,631 B2 3/2007 Dumbauld
D541,418 S 4/2007 Schechter et al.
7,198,635 B2 4/2007 Danek et al.
7,204,820 B2 4/2007 Akahoshi
7,207,471 B2 4/2007 Heinrich et al.
7,207,997 B2 4/2007 Shipp et al.
7,210,881 B2 5/2007 Greenberg
7,211,079 B2 5/2007 Treat
7,217,128 B2 5/2007 Atkin et al.
7,217,269 B2 5/2007 El-Galley et al.
7,220,951 B2 5/2007 Truckai et al.
7,223,229 B2 5/2007 Inman et al.
7,225,964 B2 6/2007 Mastri et al.
7,226,448 B2 6/2007 Bertolero et al.
7,229,455 B2 6/2007 Sakurai et al.
7,232,440 B2 6/2007 Dumbauld et al.
7,235,071 B2 6/2007 Gonnering
7,235,073 B2 6/2007 Levine et al.
7,241,294 B2 7/2007 Reschke
7,244,262 B2 7/2007 Wiener et al.
7,251,531 B2 7/2007 Mosher et al.
7,252,641 B2 8/2007 Thompson et al.
7,252,667 B2 8/2007 Moses et al.
7,258,688 B1 8/2007 Shah et al.
7,267,677 B2 9/2007 Johnson et al.
7,267,685 B2 9/2007 Butaric et al.
7,269,873 B2 9/2007 Brewer et al.
7,273,483 B2 9/2007 Wiener et al.
D552,241 S 10/2007 Bromley et al.
7,282,048 B2 10/2007 Goble et al.
7,285,895 B2 10/2007 Beaupre
7,287,682 B1 10/2007 Ezzat et al.
7,297,149 B2 11/2007 Vitali et al.
7,300,431 B2 11/2007 Dubrovsky
7,300,435 B2 11/2007 Wham et al.
7,300,446 B2 11/2007 Beaupre
7,300,450 B2 11/2007 Vleugels et al.
7,303,531 B2 12/2007 Lee et al.
7,303,557 B2 12/2007 Wham et al.
7,306,597 B2 12/2007 Manzo
7,307,313 B2 12/2007 Ohyanagi et al.
7,309,849 B2 12/2007 Truckai et al.
7,311,706 B2 12/2007 Schoenman et al.
7,311,709 B2 12/2007 Truckai et al.
7,317,955 B2 1/2008 McGreevy
7,318,831 B2 1/2008 Alvarez et al.
7,326,236 B2 2/2008 Andreas et al.
7,329,257 B2 2/2008 Kanehira et al.
7,331,410 B2 2/2008 Yong et al.
7,335,165 B2 2/2008 Truwit et al.
7,335,997 B2 2/2008 Wiener
7,337,010 B2 2/2008 Howard et al.
7,353,068 B2 4/2008 Tanaka et al.
7,354,440 B2 4/2008 Truckal et al.
7,357,287 B2 4/2008 Shelton, IV et al.
7,357,802 B2 4/2008 Palanker et al.
7,361,172 B2 4/2008 Cimino
7,364,577 B2 4/2008 Wham et al.
7,367,976 B2 5/2008 Lawes et al.
7,371,227 B2 5/2008 Zeiner
RE40,388 E 6/2008 Gines
7,380,695 B2 6/2008 Doll et al.
7,380,696 B2 6/2008 Shelton, IV et al.
7,381,209 B2 6/2008 Truckai et al.
7,384,420 B2 6/2008 Dycus et al.
7,390,317 B2 6/2008 Taylor et al.
7,396,356 B2 7/2008 Mollenauer
7,403,224 B2 7/2008 Fuller et al.
7,404,508 B2 7/2008 Smith et al.
7,407,077 B2 8/2008 Ortiz et al.
7,408,288 B2 8/2008 Hara
7,412,008 B2 8/2008 Lliev
7,416,101 B2 8/2008 Shelton, IV et al.
7,416,437 B2 8/2008 Sartor et al.
D576,725 S 9/2008 Shumer et al.
7,419,490 B2 9/2008 Falkenstein et al.
7,422,139 B2 9/2008 Shelton, IV et al.
7,422,463 B2 9/2008 Kuo
7,422,582 B2 9/2008 Malackowski et al.
D578,643 S 10/2008 Shumer et al.
D578,644 S 10/2008 Shumer et al.
D578,645 S 10/2008 Shumer et al.
7,431,704 B2 10/2008 Babaev
7,431,720 B2 10/2008 Pendekanti et al.
7,435,582 B2 10/2008 Zimmermann et al.
7,441,684 B2 10/2008 Shelton, IV et al.
7,442,193 B2 10/2008 Shields et al.
7,445,621 B2 11/2008 Dumbauld et al.
7,455,208 B2 11/2008 Wales et al.
7,462,181 B2 12/2008 Kraft et al.
7,464,846 B2 12/2008 Shelton, IV et al.
7,472,815 B2 1/2009 Shelton, IV et al.
7,473,145 B2 1/2009 Ehr et al.
7,473,253 B2 1/2009 Dycus et al.
7,473,263 B2 1/2009 Johnston et al.
7,479,148 B2 1/2009 Beaupre
7,479,160 B2 1/2009 Branch et al.
7,481,775 B2 1/2009 Weikel, Jr. et al.
7,488,285 B2 2/2009 Honda et al.
7,488,319 B2 2/2009 Yates
7,491,201 B2 2/2009 Shields et al.
7,494,468 B2 2/2009 Rabiner et al.
7,494,501 B2 2/2009 Ahlberg et al.
7,498,080 B2 3/2009 Tung et al.
7,502,234 B2 3/2009 Goliszek et al.
7,503,893 B2 3/2009 Kucklick
7,503,895 B2 3/2009 Rabiner et al.
7,506,790 B2 3/2009 Shelton, IV
7,506,791 B2 3/2009 Omaits et al.
7,510,107 B2 3/2009 Timm et al.
7,513,025 B2 4/2009 Fischer
7,517,349 B2 4/2009 Truckai et al.
7,524,320 B2 4/2009 Tierney et al.
7,530,986 B2 5/2009 Beaupre et al.
7,534,243 B1 5/2009 Chin et al.
7,535,233 B2 5/2009 Kojovic et al.
D594,983 S 6/2009 Price et al.
7,540,871 B2 6/2009 Gonnering
7,540,872 B2 6/2009 Schechter et al.
7,543,730 B1 6/2009 Marczyk
7,544,200 B2 6/2009 Houser
7,549,564 B2 6/2009 Boudreaux
7,550,216 B2 6/2009 Ofer et al.
7,553,309 B2 6/2009 Buysse et al.
7,559,450 B2 7/2009 Wales et al.
7,559,452 B2 7/2009 Wales et al.
7,566,318 B2 7/2009 Haefner
7,567,012 B2 7/2009 Namikawa
7,568,603 B2 8/2009 Shelton, IV et al.
7,569,057 B2 8/2009 Liu et al.
7,572,266 B2 8/2009 Young et al.
7,572,268 B2 8/2009 Babaev
7,578,820 B2 8/2009 Moore et al.
7,582,084 B2 9/2009 Swanson et al.
7,582,086 B2 9/2009 Privitera et al.

(56) **References Cited**

U.S. PATENT DOCUMENTS

7,582,087 B2 9/2009 Tetzlaff et al.
7,582,095 B2 9/2009 Shipp et al.
7,585,181 B2 9/2009 Olsen
7,586,289 B2 9/2009 Andruk et al.
7,587,536 B2 9/2009 McLeod
7,588,176 B2 9/2009 Timm et al.
7,594,925 B2 9/2009 Danek et al.
7,597,693 B2 10/2009 Garrison
7,601,119 B2 10/2009 Shahinian
7,601,136 B2 10/2009 Akahoshi
7,604,150 B2 10/2009 Boudreaux
7,607,557 B2 10/2009 Shelton, IV et al.
7,621,930 B2 11/2009 Houser
7,628,791 B2 12/2009 Garrison et al.
7,628,792 B2 12/2009 Guerra
7,632,267 B2 12/2009 Dahla
7,632,269 B2 12/2009 Truckai et al.
7,641,653 B2 1/2010 Dalla Betta et al.
7,641,671 B2 1/2010 Crainich
7,644,848 B2 1/2010 Swayze et al.
7,645,240 B2 1/2010 Thompson et al.
7,645,277 B2 1/2010 McClurken et al.
7,645,278 B2 1/2010 Ichihashi et al.
7,648,499 B2 1/2010 Orszulak et al.
7,654,431 B2 2/2010 Hueil et al.
7,655,003 B2 2/2010 Lorang et al.
7,658,311 B2 2/2010 Boudreaux
7,659,833 B2 2/2010 Warner et al.
7,662,151 B2 2/2010 Crompton, Jr. et al.
7,665,647 B2 2/2010 Shelton, IV et al.
7,666,206 B2 2/2010 Taniguchi et al.
7,667,592 B2 2/2010 Ohyama et al.
7,670,334 B2 3/2010 Hueil et al.
7,670,338 B2 3/2010 Albrecht et al.
7,674,263 B2 3/2010 Ryan
7,678,069 B1 3/2010 Baker et al.
7,678,125 B2 3/2010 Shipp
7,682,366 B2 3/2010 Sakurai et al.
7,686,770 B2 3/2010 Cohen
7,686,826 B2 3/2010 Lee et al.
7,688,028 B2 3/2010 Phillips et al.
7,691,095 B2 4/2010 Bednarek et al.
7,691,098 B2 4/2010 Wallace et al.
7,699,846 B2 4/2010 Ryan
7,703,459 B2 4/2010 Saadat et al.
7,703,653 B2 4/2010 Shah et al.
7,708,735 B2 5/2010 Chapman et al.
7,708,751 B2 5/2010 Hughes et al.
7,708,768 B2 5/2010 Danek et al.
7,713,202 B2 5/2010 Boukhny et al.
7,714,481 B2 5/2010 Sakai
7,717,312 B2 5/2010 Beetel
7,717,915 B2 5/2010 Miyazawa
7,721,935 B2 5/2010 Racenet et al.
7,722,527 B2 5/2010 Bouchier et al.
7,722,607 B2 5/2010 Dumbauld et al.
D618,797 S 6/2010 Price et al.
7,726,537 B2 6/2010 Olson et al.
7,727,177 B2 6/2010 Bayat
7,738,969 B2 6/2010 Bleich
7,740,594 B2 6/2010 Hibner
7,751,115 B2 7/2010 Song
7,753,904 B2 7/2010 Shelton, IV et al.
7,753,908 B2 7/2010 Swanson
7,762,445 B2 7/2010 Heinrich et al.
D621,503 S 8/2010 Otten et al.
7,766,210 B2 8/2010 Shelton, IV et al.
7,766,693 B2 8/2010 Sartor et al.
7,766,910 B2 8/2010 Hixson et al.
7,768,510 B2 8/2010 Tsai et al.
7,770,774 B2 8/2010 Mastri et al.
7,770,775 B2 8/2010 Shelton, IV et al.
7,771,425 B2 8/2010 Dycus et al.
7,771,444 B2 8/2010 Patel et al.
7,775,972 B2 8/2010 Brock et al.
7,776,036 B2 8/2010 Schechter et al.
7,776,037 B2 8/2010 Odom
7,778,733 B2 8/2010 Nowlin et al.
7,780,054 B2 8/2010 Wales
7,780,593 B2 8/2010 Ueno et al.
7,780,651 B2 8/2010 Madhani et al.
7,780,659 B2 8/2010 Okada et al.
7,780,663 B2 8/2010 Yates et al.
7,784,662 B2 8/2010 Wales et al.
7,784,663 B2 8/2010 Shelton, IV
7,789,883 B2 9/2010 Takashino et al.
7,793,814 B2 9/2010 Racenet et al.
7,796,969 B2 9/2010 Kelly et al.
7,798,386 B2 9/2010 Schall et al.
7,799,020 B2 9/2010 Shores et al.
7,799,045 B2 9/2010 Masuda
7,803,152 B2 9/2010 Honda et al.
7,803,156 B2 9/2010 Eder et al.
7,806,891 B2 10/2010 Nowlin et al.
7,810,693 B2 10/2010 Broehl et al.
7,811,283 B2 10/2010 Moses et al.
7,815,641 B2 10/2010 Dodde et al.
7,819,298 B2 10/2010 Hall et al.
7,819,299 B2 10/2010 Shelton, IV et al.
7,819,819 B2 10/2010 Quick et al.
7,819,872 B2 10/2010 Johnson et al.
7,821,143 B2 10/2010 Wiener
D627,066 S 11/2010 Romero
7,824,401 B2 11/2010 Manzo et al.
7,832,408 B2 11/2010 Shelton, IV et al.
7,832,611 B2 11/2010 Boyden et al.
7,832,612 B2 11/2010 Baxter, III et al.
7,834,484 B2 11/2010 Sartor
7,837,699 B2 11/2010 Yamada et al.
7,845,537 B2 12/2010 Shelton, IV et al.
7,846,155 B2 12/2010 Houser et al.
7,846,159 B2 12/2010 Morrison et al.
7,846,160 B2 12/2010 Payne et al.
7,846,161 B2 12/2010 Dumbauld et al.
7,854,735 B2 12/2010 Houser et al.
D631,155 S 1/2011 Peine et al.
7,861,906 B2 1/2011 Doll et al.
7,862,560 B2 1/2011 Marion
7,871,392 B2 1/2011 Sartor
7,876,030 B2 1/2011 Taki et al.
D631,965 S 2/2011 Price et al.
7,878,991 B2 2/2011 Babaev
7,879,033 B2 2/2011 Sartor et al.
7,879,035 B2 2/2011 Garrison et al.
7,879,070 B2 2/2011 Ortiz et al.
7,892,606 B2 2/2011 Thies et al.
7,896,875 B2 3/2011 Heim et al.
7,897,792 B2 3/2011 Iikura et al.
7,901,400 B2 3/2011 Wham et al.
7,901,423 B2 3/2011 Stulen et al.
7,905,881 B2 3/2011 Masuda et al.
7,909,220 B2 3/2011 Viola
7,909,820 B2 3/2011 Lipson et al.
7,909,824 B2 3/2011 Masuda et al.
7,918,848 B2 4/2011 Lau et al.
7,919,184 B2 4/2011 Mohapatra et al.
7,922,061 B2 4/2011 Shelton, IV et al.
7,922,651 B2 4/2011 Yamada et al.
7,931,649 B2 4/2011 Couture et al.
D637,288 S 5/2011 Houghton
D638,540 S 5/2011 Ijiri et al.
7,935,114 B2 5/2011 Takashino et al.
7,936,203 B2 5/2011 Zimlich
7,951,095 B2 5/2011 Makin et al.
7,951,165 B2 5/2011 Golden et al.
7,955,331 B2 6/2011 Truckai et al.
7,956,620 B2 6/2011 Gilbert
7,959,050 B2 6/2011 Smith et al.
7,959,626 B2 6/2011 Hong et al.
7,963,963 B2 6/2011 Francischelli et al.
7,967,602 B2 6/2011 Lindquist
7,972,329 B2 7/2011 Refior et al.
7,976,544 B2 7/2011 McClurken et al.
7,980,443 B2 7/2011 Scheib et al.

(56) **References Cited**

U.S. PATENT DOCUMENTS

7,981,050 B2 7/2011 Ritchart et al.
7,981,113 B2 7/2011 Truckai et al.
7,997,278 B2 8/2011 Utley et al.
7,998,157 B2 8/2011 Culp et al.
8,020,743 B2 9/2011 Shelton, IV
8,028,885 B2 10/2011 Smith et al.
8,033,173 B2 10/2011 Ehlert et al.
8,038,693 B2 10/2011 Allen
8,048,070 B2 11/2011 O'Brien et al.
8,052,672 B2 11/2011 Laufer et al.
8,056,720 B2 11/2011 Hawkes
8,056,787 B2 11/2011 Boudreaux et al.
8,057,468 B2 11/2011 Konesky
8,057,498 B2 11/2011 Robertson
8,058,771 B2 11/2011 Giordano et al.
8,061,014 B2 11/2011 Smith et al.
8,066,167 B2 11/2011 Measamer et al.
8,070,036 B1 12/2011 Knodel
8,070,711 B2 12/2011 Bassinger et al.
8,070,762 B2 12/2011 Escudero et al.
8,075,555 B2 12/2011 Truckai et al.
8,075,558 B2 12/2011 Truckai et al.
8,089,197 B2 1/2012 Rinner et al.
8,092,475 B2 1/2012 Cotter et al.
8,096,459 B2 1/2012 Ortiz et al.
8,097,012 B2 1/2012 Kagarise
8,100,894 B2 1/2012 Mucko et al.
8,105,323 B2 1/2012 Buysse et al.
8,114,104 B2 2/2012 Young et al.
8,118,276 B2 2/2012 Sanders et al.
8,128,624 B2 3/2012 Couture et al.
8,133,218 B2 3/2012 Daw et al.
8,136,712 B2 3/2012 Zingman
8,141,762 B2 3/2012 Bedi et al.
8,142,421 B2 3/2012 Cooper et al.
8,142,461 B2 3/2012 Houser et al.
8,147,508 B2 4/2012 Madan et al.
8,152,801 B2 4/2012 Goldberg et al.
8,152,825 B2 4/2012 Madan et al.
8,157,145 B2 4/2012 Shelton, IV et al.
8,161,977 B2 4/2012 Shelton, IV et al.
8,162,966 B2 4/2012 Connor et al.
8,172,846 B2 5/2012 Brunnett et al.
8,172,870 B2 5/2012 Shipp
8,177,800 B2 5/2012 Spitz et al.
8,182,502 B2 5/2012 Stulen et al.
8,186,560 B2 5/2012 Hess et al.
8,186,877 B2 5/2012 Klimovitch et al.
8,187,267 B2 5/2012 Pappone et al.
D661,801 S 6/2012 Price et al.
D661,802 S 6/2012 Price et al.
D661,803 S 6/2012 Price et al.
D661,804 S 6/2012 Price et al.
8,197,472 B2 6/2012 Lau et al.
8,197,479 B2 6/2012 Olson et al.
8,197,502 B2 6/2012 Smith et al.
8,207,651 B2 6/2012 Gilbert
8,210,411 B2 7/2012 Yates et al.
8,221,415 B2 7/2012 Francischelli
8,226,580 B2 7/2012 Govari et al.
8,226,675 B2 7/2012 Houser et al.
8,231,607 B2 7/2012 Takuma
8,235,917 B2 8/2012 Joseph et al.
8,236,018 B2 8/2012 Yoshimine et al.
8,236,019 B2 8/2012 Houser
8,236,020 B2 8/2012 Smith et al.
8,241,235 B2 8/2012 Kahler et al.
8,241,271 B2 8/2012 Millman et al.
8,241,282 B2 8/2012 Unger et al.
8,241,283 B2 8/2012 Guerra et al.
8,241,284 B2 8/2012 Dycus et al.
8,241,312 B2 8/2012 Messerly
8,246,575 B2 8/2012 Viola
8,246,615 B2 8/2012 Behnke
8,246,616 B2 8/2012 Amoah et al.
8,246,618 B2 8/2012 Bucciaglia et al.
8,251,994 B2 8/2012 McKenna et al.
8,252,012 B2 8/2012 Stulen
8,253,303 B2 8/2012 Giordano et al.
8,257,377 B2 9/2012 Wiener et al.
8,257,387 B2 9/2012 Cunningham
8,262,563 B2 9/2012 Bakos et al.
8,267,300 B2 9/2012 Boudreaux
8,273,087 B2 9/2012 Kimura et al.
D669,992 S 10/2012 Schafer et al.
D669,993 S 10/2012 Merchant et al.
8,277,446 B2 10/2012 Heard
8,277,447 B2 10/2012 Garrison et al.
8,277,471 B2 10/2012 Wiener et al.
8,282,669 B2 10/2012 Gerber et al.
8,286,846 B2 10/2012 Smith et al.
8,287,485 B2 10/2012 Kimura et al.
8,287,528 B2 10/2012 Wham et al.
8,287,532 B2 10/2012 Carroll et al.
8,292,886 B2 10/2012 Kerr et al.
8,292,888 B2 10/2012 Whitman
8,292,905 B2 10/2012 Taylor et al.
8,298,223 B2 10/2012 Wham et al.
8,298,225 B2 10/2012 Gilbert
8,298,232 B2 10/2012 Unger
8,298,233 B2 10/2012 Mueller
8,303,576 B2 11/2012 Brock
8,303,579 B2 11/2012 Shibata
8,303,580 B2 11/2012 Wham et al.
8,303,583 B2 11/2012 Hosier et al.
8,303,613 B2 11/2012 Crandall et al.
8,306,629 B2 11/2012 Mioduski et al.
8,308,040 B2 11/2012 Huang et al.
8,319,400 B2 11/2012 Houser et al.
8,323,302 B2 12/2012 Robertson et al.
8,323,310 B2 12/2012 Kingsley
8,328,761 B2 12/2012 Widenhouse et al.
8,328,802 B2 12/2012 Deville et al.
8,328,833 B2 12/2012 Cuny
8,328,834 B2 12/2012 Isaacs et al.
8,333,778 B2 12/2012 Smith et al.
8,333,779 B2 12/2012 Smith et al.
8,334,468 B2 12/2012 Palmer et al.
8,334,635 B2 12/2012 Voegele et al.
8,337,407 B2 12/2012 Quistgaard et al.
8,338,726 B2 12/2012 Palmer et al.
8,344,596 B2 1/2013 Nield et al.
8,348,880 B2 1/2013 Messerly et al.
8,348,947 B2 1/2013 Takashino et al.
8,348,967 B2 1/2013 Stulen
8,357,103 B2 1/2013 Mark et al.
8,357,149 B2 1/2013 Govari et al.
8,357,158 B2 1/2013 McKenna et al.
8,361,066 B2 1/2013 Long et al.
8,361,072 B2 1/2013 Dumbauld et al.
8,361,569 B2 1/2013 Saito et al.
8,366,727 B2 2/2013 Witt et al.
8,372,064 B2 2/2013 Douglass et al.
8,372,099 B2 2/2013 Deville et al.
8,372,101 B2 2/2013 Smith et al.
8,372,102 B2 2/2013 Stulen et al.
8,374,670 B2 2/2013 Selkee
8,377,044 B2 2/2013 Coe et al.
8,377,059 B2 2/2013 Deville et al.
8,377,085 B2 2/2013 Smith et al.
8,382,748 B2 2/2013 Geisel
8,382,775 B1 2/2013 Bender et al.
8,382,782 B2 2/2013 Robertson et al.
8,382,792 B2 2/2013 Chojin
8,397,971 B2 3/2013 Yates et al.
8,403,945 B2 3/2013 Whitfield et al.
8,403,948 B2 3/2013 Deville et al.
8,403,949 B2 3/2013 Palmer et al.
8,403,950 B2 3/2013 Palmer et al.
8,409,234 B2 4/2013 Stahler et al.
8,414,577 B2 4/2013 Boudreaux et al.
8,418,073 B2 4/2013 Mohr et al.
8,418,349 B2 4/2013 Smith et al.
8,419,757 B2 4/2013 Smith et al.

(56) **References Cited**

U.S. PATENT DOCUMENTS

8,419,758 B2 4/2013 Smith et al.
8,419,759 B2 4/2013 Dietz
8,423,182 B2 4/2013 Robinson et al.
8,425,410 B2 4/2013 Murray et al.
8,425,545 B2 4/2013 Smith et al.
8,430,811 B2 4/2013 Hess et al.
8,430,876 B2 4/2013 Kappus et al.
8,430,897 B2 4/2013 Novak et al.
8,430,898 B2 4/2013 Wiener et al.
8,435,257 B2 5/2013 Smith et al.
8,439,912 B2 5/2013 Cunningham et al.
8,439,939 B2 5/2013 Deville et al.
8,444,637 B2 5/2013 Podmore et al.
8,444,662 B2 5/2013 Palmer et al.
8,444,664 B2 5/2013 Balanev et al.
8,453,906 B2 6/2013 Huang et al.
8,454,639 B2 6/2013 Du et al.
8,459,525 B2 6/2013 Yates et al.
8,460,288 B2 6/2013 Tamai et al.
8,460,292 B2 6/2013 Truckai et al.
8,461,744 B2 6/2013 Wiener et al.
8,469,981 B2 6/2013 Robertson et al.
8,479,969 B2 7/2013 Shelton, IV
8,480,703 B2 7/2013 Nicholas et al.
8,484,833 B2 7/2013 Cunningham et al.
8,485,413 B2 7/2013 Scheib et al.
8,485,970 B2 7/2013 Widenhouse et al.
8,486,057 B2 7/2013 Behnke, II
8,486,096 B2 7/2013 Robertson et al.
8,491,578 B2 7/2013 Manwaring et al.
8,491,625 B2 7/2013 Horner
8,496,682 B2 7/2013 Guerra et al.
D687,549 S 8/2013 Johnson et al.
8,506,555 B2 8/2013 Ruiz Morales
8,509,318 B2 8/2013 Tailliet
8,512,336 B2 8/2013 Couture
8,512,359 B2 8/2013 Whitman et al.
8,512,364 B2 8/2013 Kowalski et al.
8,512,365 B2 8/2013 Wiener et al.
8,518,067 B2 8/2013 Masuda et al.
8,521,331 B2 8/2013 Itkowitz
8,523,882 B2 9/2013 Huitema et al.
8,523,889 B2 9/2013 Stulen et al.
8,528,563 B2 9/2013 Gruber
8,529,437 B2 9/2013 Taylor et al.
8,529,565 B2 9/2013 Masuda et al.
8,531,064 B2 9/2013 Robertson et al.
8,535,311 B2 9/2013 Schall
8,535,340 B2 9/2013 Allen
8,535,341 B2 9/2013 Allen
8,540,128 B2 9/2013 Shelton, IV et al.
8,546,996 B2 10/2013 Messerly et al.
8,546,999 B2 10/2013 Houser et al.
8,551,077 B2 10/2013 Main et al.
8,551,086 B2 10/2013 Kimura et al.
8,562,592 B2 10/2013 Conlon et al.
8,562,598 B2 10/2013 Falkenstein et al.
8,562,600 B2 10/2013 Kirkpatrick et al.
8,562,604 B2 10/2013 Nishimura
8,568,390 B2 10/2013 Mueller
8,568,400 B2 10/2013 Gilbert
8,568,412 B2 10/2013 Brandt et al.
8,569,997 B2 10/2013 Lee
8,573,461 B2 11/2013 Shelton, IV et al.
8,573,465 B2 11/2013 Shelton, IV
8,574,231 B2 11/2013 Boudreaux et al.
8,574,253 B2 11/2013 Gruber et al.
8,579,176 B2 11/2013 Smith et al.
8,579,897 B2 11/2013 Vakharia et al.
8,579,928 B2 11/2013 Robertson et al.
8,585,727 B2 11/2013 Polo
8,588,371 B2 11/2013 Ogawa et al.
8,591,459 B2 11/2013 Clymer et al.
8,591,506 B2 11/2013 Wham et al.
8,591,536 B2 11/2013 Robertson
D695,407 S 12/2013 Price et al.
D696,631 S 12/2013 Price et al.
8,597,193 B2 12/2013 Grunwald et al.
8,602,031 B2 12/2013 Reis et al.
8,602,288 B2 12/2013 Shelton, IV et al.
8,603,089 B2 12/2013 Viola
8,608,044 B2 12/2013 Hueil et al.
8,608,745 B2 12/2013 Guzman et al.
8,613,383 B2 12/2013 Beckman et al.
8,616,431 B2 12/2013 Timm et al.
8,622,274 B2 1/2014 Yates et al.
8,623,011 B2 1/2014 Spivey
8,623,016 B2 1/2014 Fischer
8,623,027 B2 1/2014 Price et al.
8,623,044 B2 1/2014 Timm et al.
8,628,529 B2 1/2014 Aldridge et al.
8,632,461 B2 1/2014 Glossop
8,638,428 B2 1/2014 Brown
8,640,788 B2 2/2014 Dachs, II et al.
8,647,350 B2 2/2014 Mohan et al.
8,650,728 B2 2/2014 Wan et al.
8,652,120 B2 2/2014 Giordano et al.
8,652,132 B2 2/2014 Tsuchiya et al.
8,652,155 B2 2/2014 Houser et al.
8,657,489 B2 2/2014 Ladurner et al.
8,659,208 B1 2/2014 Rose et al.
8,663,220 B2 3/2014 Wiener et al.
8,663,222 B2 3/2014 Anderson et al.
8,663,223 B2 3/2014 Masuda et al.
8,663,262 B2 3/2014 Smith et al.
8,668,691 B2 3/2014 Heard
8,668,710 B2 3/2014 Slipszenko et al.
8,684,253 B2 4/2014 Giordano et al.
8,685,016 B2 4/2014 Wham et al.
8,685,020 B2 4/2014 Weizman et al.
8,690,582 B2 4/2014 Rohrbach et al.
8,696,366 B2 4/2014 Chen et al.
8,696,665 B2 4/2014 Hunt et al.
8,696,666 B2 4/2014 Sanai et al.
8,702,609 B2 4/2014 Hadjicostis
8,702,704 B2 4/2014 Shelton, IV et al.
8,704,425 B2 4/2014 Giordano et al.
8,708,213 B2 4/2014 Shelton, IV et al.
8,709,031 B2 4/2014 Stulen
8,709,035 B2 4/2014 Johnson et al.
8,715,270 B2 5/2014 Weitzner et al.
8,715,277 B2 5/2014 Weizman
8,721,640 B2 5/2014 Taylor et al.
8,721,657 B2 5/2014 Kondoh et al.
8,734,443 B2 5/2014 Hixson et al.
8,747,238 B2 6/2014 Shelton, IV et al.
8,747,351 B2 6/2014 Schultz
8,747,404 B2 6/2014 Boudreaux et al.
8,749,116 B2 6/2014 Messerly et al.
8,752,264 B2 6/2014 Ackley et al.
8,752,749 B2 6/2014 Moore et al.
8,753,338 B2 6/2014 Widenhouse et al.
8,754,570 B2 6/2014 Voegele et al.
8,758,342 B2 6/2014 Bales et al.
8,758,352 B2 6/2014 Cooper et al.
8,764,735 B2 7/2014 Coe et al.
8,764,747 B2 7/2014 Cummings et al.
8,767,970 B2 7/2014 Eppolito
8,770,459 B2 7/2014 Racenet et al.
8,771,269 B2 7/2014 Sherman et al.
8,771,270 B2 7/2014 Burbank
8,771,293 B2 7/2014 Surti et al.
8,773,001 B2 7/2014 Wiener et al.
8,777,944 B2 7/2014 Frankhouser et al.
8,779,648 B2 7/2014 Giordano et al.
8,783,541 B2 7/2014 Shelton, IV et al.
8,784,415 B2 7/2014 Malackowski et al.
8,784,418 B2 7/2014 Romero
8,790,342 B2 7/2014 Stulen et al.
8,795,276 B2 8/2014 Dietz et al.
8,795,327 B2 8/2014 Dietz et al.
8,800,838 B2 8/2014 Shelton, IV
8,801,710 B2 8/2014 Ullrich et al.
8,808,319 B2 8/2014 Houser et al.

(56) **References Cited**

U.S. PATENT DOCUMENTS

8,814,856 B2 8/2014 Elmouelhi et al.
8,814,870 B2 8/2014 Paraschiv et al.
8,820,605 B2 9/2014 Shelton, IV
8,821,388 B2 9/2014 Naito et al.
8,827,992 B2 9/2014 Koss et al.
8,834,466 B2 9/2014 Cummings et al.
8,834,518 B2 9/2014 Faller et al.
8,844,789 B2 9/2014 Shelton, IV et al.
8,845,537 B2 9/2014 Tanaka et al.
8,845,630 B2 9/2014 Mehta et al.
8,848,808 B2 9/2014 Dress
8,851,354 B2 10/2014 Swensgard et al.
8,852,184 B2 10/2014 Kucklick
8,858,547 B2 10/2014 Brogna
8,862,955 B2 10/2014 Cesari
8,864,749 B2 10/2014 Okada
8,864,757 B2 10/2014 Klimovitch et al.
8,864,761 B2 10/2014 Johnson et al.
8,870,865 B2 10/2014 Frankhouser et al.
8,876,726 B2 11/2014 Amit et al.
8,876,858 B2 11/2014 Braun
8,882,766 B2 11/2014 Couture et al.
8,882,791 B2 11/2014 Stulen
8,888,776 B2 11/2014 Dietz et al.
8,888,783 B2 11/2014 Young
8,888,809 B2 11/2014 Davison et al.
8,899,462 B2 12/2014 Kostrzewski et al.
8,900,259 B2 12/2014 Houser et al.
8,906,016 B2 12/2014 Boudreaux et al.
8,906,017 B2 12/2014 Rioux et al.
8,911,438 B2 12/2014 Swoyer et al.
8,911,460 B2 12/2014 Neurohr et al.
8,920,412 B2 12/2014 Fritz et al.
8,920,421 B2 12/2014 Rupp
8,926,607 B2 1/2015 Norvell et al.
8,926,608 B2 1/2015 Bacher et al.
8,926,620 B2 1/2015 Chasmawala et al.
8,931,682 B2 1/2015 Timm et al.
8,932,282 B2 1/2015 Gilbert
8,932,299 B2 1/2015 Bono et al.
8,936,614 B2 1/2015 Allen, IV
8,939,974 B2 1/2015 Boudreaux et al.
8,951,248 B2 2/2015 Messerly et al.
8,951,272 B2 2/2015 Robertson et al.
8,956,349 B2 2/2015 Aldridge et al.
8,960,520 B2 2/2015 McCuen
8,961,515 B2 2/2015 Twomey et al.
8,961,547 B2 2/2015 Dietz et al.
8,967,443 B2 3/2015 McCuen
8,968,283 B2 3/2015 Kharin
8,968,294 B2 3/2015 Maass et al.
8,968,355 B2 3/2015 Malkowski et al.
8,974,447 B2 3/2015 Kimball et al.
8,974,477 B2 3/2015 Yamada
8,974,479 B2 3/2015 Ross et al.
8,979,843 B2 3/2015 Timm et al.
8,979,844 B2 3/2015 White et al.
8,979,890 B2 3/2015 Boudreaux
8,986,287 B2 3/2015 Park et al.
8,986,297 B2 3/2015 Daniel et al.
8,986,302 B2 3/2015 Aldridge et al.
8,989,903 B2 3/2015 Weir et al.
8,991,678 B2 3/2015 Wellman et al.
8,992,422 B2 3/2015 Spivey et al.
9,005,199 B2 4/2015 Beckman et al.
9,011,437 B2 4/2015 Woodruff et al.
9,011,471 B2 4/2015 Timm et al.
9,017,326 B2 4/2015 DiNardo et al.
9,017,355 B2 4/2015 Smith et al.
9,023,071 B2 5/2015 Miller et al.
9,028,397 B2 5/2015 Naito
9,028,476 B2 5/2015 Bonn
9,028,478 B2 5/2015 Mueller
9,028,494 B2 5/2015 Shelton, IV et al.
9,028,519 B2 5/2015 Yates et al.
9,031,667 B2 5/2015 Williams
9,033,973 B2 5/2015 Krapohl et al.
9,035,741 B2 5/2015 Hamel et al.
9,039,690 B2 5/2015 Kersten et al.
9,039,695 B2 5/2015 Giordano et al.
9,039,731 B2 5/2015 Joseph
9,043,018 B2 5/2015 Mohr
9,044,227 B2 6/2015 Shelton, IV et al.
9,044,238 B2 6/2015 Orszulak
9,044,243 B2 6/2015 Johnson et al.
9,044,245 B2 6/2015 Condie et al.
9,044,256 B2 6/2015 Cadeddu et al.
9,044,261 B2 6/2015 Houser
9,050,093 B2 6/2015 Aldridge et al.
9,050,098 B2 6/2015 Deville et al.
9,050,123 B2 6/2015 Krause et al.
9,050,124 B2 6/2015 Houser
9,055,961 B2 6/2015 Manzo et al.
9,059,547 B2 6/2015 McLawhorn
9,060,770 B2 6/2015 Shelton, IV et al.
9,060,775 B2 6/2015 Wiener et al.
9,060,776 B2 6/2015 Yates et al.
9,066,723 B2 6/2015 Beller et al.
9,066,747 B2 6/2015 Robertson
9,072,523 B2 7/2015 Houser et al.
9,072,535 B2 7/2015 Shelton, IV et al.
9,072,536 B2 7/2015 Shelton, IV et al.
9,072,539 B2 7/2015 Messerly et al.
9,084,624 B2 7/2015 Larkin et al.
9,089,327 B2 7/2015 Worrell et al.
9,089,360 B2 7/2015 Messerly et al.
9,095,362 B2 8/2015 Dachs, II et al.
9,095,367 B2 8/2015 Olson et al.
9,101,385 B2 8/2015 Shelton, IV et al.
9,107,689 B2 8/2015 Robertson et al.
9,107,690 B2 8/2015 Bales, Jr. et al.
9,113,900 B2 8/2015 Buysse et al.
9,113,907 B2 8/2015 Allen, IV et al.
9,113,940 B2 8/2015 Twomey
9,119,657 B2 9/2015 Shelton, IV et al.
9,119,957 B2 9/2015 Gantz et al.
9,125,662 B2 9/2015 Shelton, IV
9,125,667 B2 9/2015 Stone et al.
9,144,453 B2 9/2015 Rencher et al.
9,147,965 B2 9/2015 Lee
9,149,324 B2 10/2015 Huang et al.
9,149,325 B2 10/2015 Worrell et al.
9,161,803 B2 10/2015 Yates et al.
9,165,114 B2 10/2015 Jain et al.
9,168,054 B2 10/2015 Turner et al.
9,168,085 B2 10/2015 Juzkiw et al.
9,168,089 B2 10/2015 Buysse et al.
9,179,912 B2 11/2015 Yates et al.
9,186,204 B2 11/2015 Nishimura et al.
9,186,796 B2 11/2015 Ogawa
9,192,380 B2 11/2015 Racenet et al.
9,192,421 B2 11/2015 Garrison
9,192,428 B2 11/2015 Houser et al.
9,192,431 B2 11/2015 Woodruff et al.
9,198,714 B2 12/2015 Worrell et al.
9,198,776 B2 12/2015 Young
9,204,879 B2 12/2015 Shelton, IV
9,204,891 B2 12/2015 Weitzman
9,204,918 B2 12/2015 Germain et al.
9,204,923 B2 12/2015 Manzo et al.
9,216,050 B2 12/2015 Condie et al.
9,216,051 B2 12/2015 Fischer et al.
9,216,062 B2 12/2015 Duque et al.
9,220,483 B2 12/2015 Frankhouser et al.
9,220,527 B2 12/2015 Houser et al.
9,220,559 B2 12/2015 Worrell et al.
9,226,750 B2 1/2016 Weir et al.
9,226,751 B2 1/2016 Shelton, IV et al.
9,226,766 B2 1/2016 Aldridge et al.
9,226,767 B2 1/2016 Stulen et al.
9,232,979 B2 1/2016 Parihar et al.
9,237,891 B2 1/2016 Shelton, IV
9,237,921 B2 1/2016 Messerly et al.
9,241,060 B1 1/2016 Fujisaki

(56) **References Cited**

U.S. PATENT DOCUMENTS

9,241,692 B2 1/2016 Gunday et al.
9,241,728 B2 1/2016 Price et al.
9,241,730 B2 1/2016 Babaev
9,241,731 B2 1/2016 Boudreaux et al.
9,241,768 B2 1/2016 Sandhu et al.
9,247,953 B2 2/2016 Palmer et al.
9,254,165 B2 2/2016 Aronow et al.
9,259,234 B2 2/2016 Robertson et al.
9,259,265 B2 2/2016 Harris et al.
9,265,567 B2 2/2016 Orban, III et al.
9,265,926 B2 2/2016 Strobl et al.
9,277,962 B2 3/2016 Koss et al.
9,282,974 B2 3/2016 Shelton, IV
9,283,027 B2 3/2016 Monson et al.
9,283,045 B2 3/2016 Rhee et al.
9,289,256 B2 3/2016 Shelton, IV et al.
9,295,514 B2 3/2016 Shelton, IV et al.
9,301,759 B2 4/2016 Spivey et al.
9,305,497 B2 4/2016 Seo et al.
9,307,388 B2 4/2016 Liang et al.
9,307,986 B2 4/2016 Hall et al.
9,308,009 B2 4/2016 Madan et al.
9,308,014 B2 4/2016 Fischer
9,314,261 B2 4/2016 Bales, Jr. et al.
9,314,292 B2 4/2016 Trees et al.
9,314,301 B2 4/2016 Ben-Haim et al.
9,326,754 B2 5/2016 Polster
9,326,787 B2 5/2016 Sanai et al.
9,326,788 B2 5/2016 Batross et al.
9,333,025 B2 5/2016 Monson et al.
9,333,034 B2 5/2016 Hancock
9,339,289 B2 5/2016 Robertson
9,339,323 B2 5/2016 Eder et al.
9,339,326 B2 5/2016 McCullagh et al.
9,345,534 B2 5/2016 Artale et al.
9,345,900 B2 5/2016 Wu et al.
9,351,642 B2 5/2016 Nadkarni et al.
9,351,726 B2 5/2016 Leimbach et al.
9,351,754 B2 5/2016 Vakharia et al.
9,352,173 B2 5/2016 Yamada et al.
9,358,065 B2 6/2016 Ladtkow et al.
9,364,230 B2 6/2016 Shelton, IV et al.
9,370,400 B2 6/2016 Parihar
9,370,611 B2 6/2016 Ross et al.
9,375,230 B2 6/2016 Ross et al.
9,375,232 B2 6/2016 Hunt et al.
9,375,256 B2 6/2016 Cunningham et al.
9,375,267 B2 6/2016 Kerr et al.
9,385,831 B2 7/2016 Marr et al.
9,386,983 B2 7/2016 Swensgard et al.
9,393,037 B2 7/2016 Olson et al.
9,398,911 B2 7/2016 Auld
9,402,680 B2 8/2016 Ginnebaugh et al.
9,402,682 B2 8/2016 Worrell et al.
9,408,606 B2 8/2016 Shelton, IV
9,408,622 B2 8/2016 Stulen et al.
9,408,660 B2 8/2016 Strobl et al.
9,414,853 B2 8/2016 Stulen et al.
9,414,880 B2 8/2016 Monson et al.
9,421,060 B2 8/2016 Monson et al.
9,427,249 B2 8/2016 Robertson et al.
9,439,668 B2 9/2016 Timm et al.
9,439,669 B2 9/2016 Wiener et al.
9,439,671 B2 9/2016 Akagane
9,445,832 B2 9/2016 Wiener et al.
9,451,967 B2 9/2016 Jordan et al.
9,456,863 B2 10/2016 Moua
9,456,864 B2 10/2016 Witt et al.
9,468,498 B2 10/2016 Sigmon, Jr.
9,486,236 B2 11/2016 Price et al.
9,492,146 B2 11/2016 Kostrzewski et al.
9,492,224 B2 11/2016 Boudreaux et al.
9,498,245 B2 11/2016 Voegele et al.
9,498,275 B2 11/2016 Wham et al.
9,504,483 B2 11/2016 Houser et al.
9,504,520 B2 11/2016 Worrell et al.
9,504,524 B2 11/2016 Behnke, II
9,504,855 B2 * 11/2016 Messerly ..... A61B 17/320092
9,510,850 B2 12/2016 Robertson et al.
9,510,906 B2 12/2016 Boudreaux et al.
9,522,029 B2 12/2016 Yates et al.
9,522,032 B2 12/2016 Behnke
9,526,564 B2 12/2016 Rusin
9,526,565 B2 12/2016 Strobl
9,545,253 B2 1/2017 Worrell et al.
9,554,846 B2 1/2017 Boudreaux
9,554,854 B2 1/2017 Yates et al.
9,561,038 B2 2/2017 Shelton, IV et al.
9,574,644 B2 2/2017 Parihar
9,597,143 B2 3/2017 Madan et al.
9,610,091 B2 4/2017 Johnson et al.
9,610,114 B2 4/2017 Baxter, III et al.
9,615,877 B2 4/2017 Tyrrell et al.
9,623,237 B2 4/2017 Turner et al.
9,636,135 B2 5/2017 Stulen
9,636,165 B2 5/2017 Larson et al.
9,638,770 B2 5/2017 Dietz et al.
9,642,644 B2 5/2017 Houser et al.
9,642,669 B2 5/2017 Takashino et al.
9,643,052 B2 5/2017 Tchao et al.
9,649,111 B2 5/2017 Shelton, IV et al.
9,649,126 B2 5/2017 Robertson et al.
9,655,670 B2 5/2017 Larson et al.
9,662,131 B2 5/2017 Omori et al.
9,668,806 B2 6/2017 Unger et al.
9,675,374 B2 6/2017 Stulen et al.
9,675,375 B2 6/2017 Houser et al.
9,687,290 B2 6/2017 Keller
9,700,309 B2 7/2017 Jaworek et al.
9,700,339 B2 7/2017 Nield
9,700,343 B2 7/2017 Messerly et al.
9,705,456 B2 7/2017 Gilbert
9,707,004 B2 7/2017 Houser et al.
9,707,027 B2 7/2017 Ruddenklau et al.
9,707,030 B2 7/2017 Davison et al.
9,713,507 B2 7/2017 Stulen et al.
9,717,548 B2 8/2017 Couture
9,717,552 B2 8/2017 Cosman et al.
9,724,118 B2 8/2017 Schulte et al.
9,724,152 B2 8/2017 Horlle et al.
9,737,326 B2 8/2017 Worrell et al.
9,737,355 B2 8/2017 Yates et al.
9,737,358 B2 8/2017 Beckman et al.
9,743,929 B2 8/2017 Leimbach et al.
9,743,946 B2 8/2017 Faller et al.
9,743,947 B2 8/2017 Price et al.
9,757,142 B2 9/2017 Shimizu
9,757,186 B2 9/2017 Boudreaux et al.
9,764,164 B2 9/2017 Wiener et al.
9,770,285 B2 9/2017 Zoran et al.
9,782,214 B2 10/2017 Houser et al.
9,788,851 B2 10/2017 Dannaher et al.
9,795,405 B2 10/2017 Price et al.
9,795,436 B2 10/2017 Yates et al.
9,795,808 B2 10/2017 Messerly et al.
9,801,648 B2 10/2017 Houser et al.
9,802,033 B2 10/2017 Hibner et al.
9,808,308 B2 11/2017 Faller et al.
9,814,514 B2 11/2017 Shelton, IV et al.
9,820,768 B2 11/2017 Gee et al.
9,820,771 B2 11/2017 Norton et al.
9,820,806 B2 11/2017 Lee et al.
9,839,443 B2 12/2017 Brockman et al.
9,848,901 B2 12/2017 Robertson et al.
9,848,902 B2 12/2017 Price et al.
9,848,937 B2 12/2017 Trees et al.
9,861,428 B2 1/2018 Trees et al.
9,867,651 B2 1/2018 Wham
9,867,670 B2 1/2018 Brannan et al.
9,872,725 B2 1/2018 Worrell et al.
9,872,726 B2 1/2018 Morisaki
9,877,720 B2 1/2018 Worrell et al.
9,877,776 B2 1/2018 Boudreaux
9,883,884 B2 2/2018 Neurohr et al.

(56) **References Cited**

U.S. PATENT DOCUMENTS

9,888,958 B2 2/2018 Evans et al.
9,907,563 B2 3/2018 Germain et al.
9,913,656 B2 3/2018 Stulen
9,913,680 B2 3/2018 Voegele et al.
9,925,003 B2 3/2018 Parihar et al.
9,949,785 B2 4/2018 Price et al.
9,949,788 B2 4/2018 Boudreaux
9,962,182 B2 5/2018 Dietz et al.
9,987,033 B2 6/2018 Neurohr et al.
10,004,526 B2 6/2018 Dycus et al.
10,010,339 B2 7/2018 Witt et al.
10,010,341 B2 7/2018 Houser et al.
10,022,142 B2 7/2018 Aranyi et al.
10,022,567 B2 7/2018 Messerly et al.
10,022,568 B2 7/2018 Messerly et al.
10,028,761 B2 7/2018 Leimbach et al.
10,028,786 B2 7/2018 Mucilli et al.
10,034,684 B2 7/2018 Weisenburgh, II et al.
10,034,704 B2 7/2018 Asher et al.
10,045,794 B2 8/2018 Witt et al.
10,045,810 B2 8/2018 Schall et al.
10,045,819 B2 8/2018 Jensen et al.
10,070,916 B2 9/2018 Artale
10,085,762 B2 10/2018 Timm et al.
10,085,792 B2 10/2018 Johnson et al.
10,092,310 B2 10/2018 Boudreaux et al.
10,092,344 B2 10/2018 Mohr et al.
10,092,348 B2 10/2018 Boudreaux
10,111,699 B2 10/2018 Boudreaux
10,111,703 B2 10/2018 Cosman, Jr. et al.
10,117,667 B2 11/2018 Robertson et al.
10,117,702 B2 11/2018 Danziger et al.
2001/0025173 A1 9/2001 Ritchie et al.
2001/0025183 A1 9/2001 Shahidi
2001/0025184 A1 9/2001 Messerly
2001/0031950 A1 10/2001 Ryan
2001/0039419 A1 11/2001 Francischelli et al.
2002/0002377 A1 1/2002 Cimino
2002/0002380 A1 1/2002 Bishop
2002/0019649 A1 2/2002 Sikora et al.
2002/0022836 A1 2/2002 Goble et al.
2002/0029036 A1 3/2002 Goble et al.
2002/0029055 A1 3/2002 Bonutti
2002/0049551 A1 4/2002 Friedman et al.
2002/0052617 A1 5/2002 Anis et al.
2002/0077550 A1 6/2002 Rabiner et al.
2002/0107517 A1 8/2002 Witt et al.
2002/0156466 A1 10/2002 Sakurai et al.
2002/0156493 A1 10/2002 Houser et al.
2003/0014053 A1 1/2003 Nguyen et al.
2003/0014087 A1 1/2003 Fang et al.
2003/0036705 A1 2/2003 Hare et al.
2003/0050572 A1 3/2003 Brautigam et al.
2003/0055443 A1 3/2003 Spotnitz
2003/0109875 A1 6/2003 Tetzlaff et al.
2003/0114851 A1 6/2003 Truckai et al.
2003/0130693 A1 7/2003 Levin et al.
2003/0139741 A1 7/2003 Goble et al.
2003/0144680 A1 7/2003 Kellogg et al.
2003/0158548 A1 8/2003 Phan et al.
2003/0171747 A1 9/2003 Kanehira et al.
2003/0199794 A1 10/2003 Sakurai et al.
2003/0204199 A1 10/2003 Novak et al.
2003/0212332 A1 11/2003 Fenton et al.
2003/0212363 A1 11/2003 Shipp
2003/0212392 A1 11/2003 Fenton et al.
2003/0212422 A1 11/2003 Fenton et al.
2003/0225332 A1 12/2003 Okada et al.
2003/0229344 A1 12/2003 Dycus et al.
2004/0030254 A1 2/2004 Babaev
2004/0030330 A1 2/2004 Brassell et al.
2004/0047485 A1 3/2004 Sherrit et al.
2004/0054364 A1 3/2004 Aranyi et al.
2004/0064151 A1 4/2004 Mollenauer
2004/0087943 A1 5/2004 Dycus et al.
2004/0092921 A1 5/2004 Kadziauskas et al.
2004/0092992 A1 5/2004 Adams et al.
2004/0097911 A1 5/2004 Murakami et al.
2004/0097912 A1 5/2004 Gonnering
2004/0097919 A1 5/2004 Wellman et al.
2004/0097996 A1 5/2004 Rabiner et al.
2004/0116952 A1 6/2004 Sakurai et al.
2004/0122423 A1 6/2004 Dycus et al.
2004/0132383 A1 7/2004 Langford et al.
2004/0138621 A1 7/2004 Jahns et al.
2004/0142667 A1 7/2004 Lochhead et al.
2004/0147934 A1 7/2004 Kiester
2004/0147945 A1 7/2004 Fritzsch
2004/0158237 A1 8/2004 Abboud et al.
2004/0167508 A1 8/2004 Wham et al.
2004/0176686 A1 9/2004 Hare et al.
2004/0176751 A1 9/2004 Weitzner et al.
2004/0193150 A1 9/2004 Sharkey et al.
2004/0199193 A1 10/2004 Hayashi et al.
2004/0215132 A1 10/2004 Yoon
2004/0243147 A1 12/2004 Lipow
2004/0249374 A1 12/2004 Tetzlaff et al.
2004/0260273 A1 12/2004 Wan
2004/0260300 A1 12/2004 Gorensek et al.
2005/0015125 A1 1/2005 Mioduski et al.
2005/0020967 A1 1/2005 Ono
2005/0021018 A1 1/2005 Anderson et al.
2005/0021065 A1 1/2005 Yamada et al.
2005/0021078 A1 1/2005 Vleugels et al.
2005/0033278 A1 2/2005 McClurken et al.
2005/0033337 A1 2/2005 Muir et al.
2005/0070800 A1 3/2005 Takahashi
2005/0088285 A1 4/2005 Jei
2005/0090817 A1 4/2005 Phan
2005/0096683 A1 5/2005 Ellins et al.
2005/0099824 A1 5/2005 Dowling et al.
2005/0131390 A1 6/2005 Heinrich et al.
2005/0143769 A1 6/2005 White et al.
2005/0149108 A1 7/2005 Cox
2005/0165429 A1 7/2005 Douglas et al.
2005/0171522 A1 8/2005 Christopherson
2005/0177184 A1 8/2005 Easley
2005/0182339 A1 8/2005 Lee et al.
2005/0188743 A1 9/2005 Land
2005/0192610 A1 9/2005 Houser et al.
2005/0192611 A1 9/2005 Houser
2005/0222598 A1 10/2005 Ho et al.
2005/0234484 A1 10/2005 Houser et al.
2005/0249667 A1 11/2005 Tuszynski et al.
2005/0256405 A1 11/2005 Makin et al.
2005/0261588 A1 11/2005 Makin et al.
2005/0262175 A1 11/2005 Iino et al.
2005/0267464 A1 12/2005 Truckai et al.
2005/0271807 A1 12/2005 Iljima et al.
2005/0273090 A1 12/2005 Nieman et al.
2005/0288659 A1 12/2005 Kimura et al.
2006/0025757 A1 2/2006 Heim
2006/0030797 A1 2/2006 Zhou et al.
2006/0058825 A1 3/2006 Ogura et al.
2006/0063130 A1 3/2006 Hayman et al.
2006/0064086 A1 3/2006 Odom
2006/0066181 A1 3/2006 Bromfield et al.
2006/0074442 A1 4/2006 Noriega et al.
2006/0079874 A1 4/2006 Faller et al.
2006/0079879 A1 4/2006 Faller et al.
2006/0095046 A1 5/2006 Trieu et al.
2006/0109061 A1 5/2006 Dobson et al.
2006/0159731 A1 7/2006 Shoshan
2006/0190034 A1 8/2006 Nishizawa et al.
2006/0206100 A1 9/2006 Eskridge et al.
2006/0206115 A1 9/2006 Schomer et al.
2006/0211943 A1 9/2006 Beaupre
2006/0217729 A1 9/2006 Eskridge et al.
2006/0224160 A1 10/2006 Trieu et al.
2006/0247558 A1 11/2006 Yamada
2006/0253050 A1 11/2006 Yoshimine et al.
2006/0264809 A1 11/2006 Hansmann et al.
2006/0264995 A1 11/2006 Fanton et al.
2006/0270916 A1 11/2006 Skwarek et al.

(56) **References Cited**

U.S. PATENT DOCUMENTS

2006/0271030 A1 11/2006 Francis et al.
2006/0293656 A1 12/2006 Shadduck et al.
2007/0016235 A1 1/2007 Tanaka et al.
2007/0016236 A1 1/2007 Beaupre
2007/0021738 A1 1/2007 Hasser et al.
2007/0027468 A1 2/2007 Wales et al.
2007/0035203 A1* 2/2007 Bromfield ..... B06B 1/0238 310/311
2007/0055228 A1 3/2007 Berg et al.
2007/0056596 A1 3/2007 Fanney et al.
2007/0060935 A1 3/2007 Schwardt et al.
2007/0063618 A1 3/2007 Bromfield
2007/0067123 A1 3/2007 Jungerman
2007/0073185 A1 3/2007 Nakao
2007/0073341 A1 3/2007 Smith et al.
2007/0074584 A1 4/2007 Talarico et al.
2007/0106317 A1 5/2007 Shelton et al.
2007/0118115 A1 5/2007 Artale et al.
2007/0130771 A1 6/2007 Ehlert et al.
2007/0135803 A1 6/2007 Belson
2007/0149881 A1 6/2007 Rabin
2007/0156163 A1 7/2007 Davison et al.
2007/0166663 A1 7/2007 Telles et al.
2007/0173803 A1 7/2007 Wham et al.
2007/0173804 A1* 7/2007 Wham ..... A61B 18/1206 606/34
2007/0173813 A1 7/2007 Odom
2007/0173872 A1 7/2007 Neuenfeldt
2007/0185474 A1 8/2007 Nahen
2007/0191712 A1 8/2007 Messerly et al.
2007/0191713 A1 8/2007 Eichmann et al.
2007/0203483 A1 8/2007 Kim et al.
2007/0208336 A1 9/2007 Kim et al.
2007/0208340 A1 9/2007 Ganz et al.
2007/0219481 A1 9/2007 Babaev
2007/0232926 A1 10/2007 Stulen et al.
2007/0232928 A1 10/2007 Wiener et al.
2007/0236213 A1 10/2007 Paden et al.
2007/0239101 A1 10/2007 Kellogg
2007/0249941 A1 10/2007 Salehi et al.
2007/0260242 A1 11/2007 Dycus et al.
2007/0265560 A1 11/2007 Soltani et al.
2007/0265613 A1 11/2007 Edelstein et al.
2007/0265616 A1 11/2007 Couture et al.
2007/0265620 A1 11/2007 Kraas et al.
2007/0275348 A1 11/2007 Lemon
2007/0287933 A1 12/2007 Phan et al.
2007/0288055 A1 12/2007 Lee
2008/0005213 A1 1/2008 Holtzman
2008/0013809 A1 1/2008 Zhu et al.
2008/0015575 A1 1/2008 Odom et al.
2008/0039746 A1 2/2008 Hissong et al.
2008/0051812 A1 2/2008 Schmitz et al.
2008/0058775 A1 3/2008 Darian et al.
2008/0058845 A1 3/2008 Shimizu et al.
2008/0071269 A1 3/2008 Hilario et al.
2008/0077145 A1 3/2008 Boyden et al.
2008/0082039 A1 4/2008 Babaev
2008/0082098 A1 4/2008 Tanaka et al.
2008/0097501 A1 4/2008 Blier
2008/0114355 A1 5/2008 Whayne et al.
2008/0114364 A1 5/2008 Goldin et al.
2008/0122496 A1 5/2008 Wagner
2008/0125768 A1 5/2008 Tahara et al.
2008/0147058 A1 6/2008 Horrell et al.
2008/0147062 A1 6/2008 Truckai et al.
2008/0147092 A1 6/2008 Rogge et al.
2008/0171938 A1 7/2008 Masuda et al.
2008/0177268 A1 7/2008 Daum et al.
2008/0188755 A1 8/2008 Hart
2008/0200940 A1 8/2008 Eichmann et al.
2008/0208108 A1 8/2008 Kimura
2008/0208231 A1 8/2008 Ota et al.
2008/0214967 A1 9/2008 Aranyi et al.
2008/0234709 A1 9/2008 Houser
2008/0243162 A1 10/2008 Shibata et al.
2008/0255413 A1 10/2008 Zemlok et al.
2008/0281200 A1 11/2008 Voic et al.
2008/0281315 A1 11/2008 Gines
2008/0287944 A1 11/2008 Pearson et al.
2008/0287948 A1 11/2008 Newton et al.
2008/0296346 A1 12/2008 Shelton, IV et al.
2008/0300588 A1 12/2008 Groth et al.
2009/0012516 A1 1/2009 Curtis et al.
2009/0023985 A1 1/2009 Ewers
2009/0048537 A1 2/2009 Lydon et al.
2009/0048589 A1 2/2009 Takashino et al.
2009/0054886 A1 2/2009 Yachi et al.
2009/0054889 A1 2/2009 Newton et al.
2009/0054894 A1 2/2009 Yachi
2009/0076506 A1 3/2009 Baker
2009/0082716 A1 3/2009 Akahoshi
2009/0082766 A1 3/2009 Unger et al.
2009/0088785 A1 4/2009 Masuda
2009/0090763 A1 4/2009 Zemlok et al.
2009/0112204 A1* 4/2009 Aronow ..... A61B 18/1233 606/35
2009/0118751 A1 5/2009 Wiener et al.
2009/0143799 A1 6/2009 Smith et al.
2009/0143800 A1 6/2009 Deville et al.
2009/0157075 A1* 6/2009 Wham ..... A61B 18/1206 606/40
2009/0163807 A1 6/2009 Sliwa
2009/0182322 A1 7/2009 D'Amelio et al.
2009/0182331 A1 7/2009 D'Amelio et al.
2009/0182332 A1 7/2009 Long et al.
2009/0216157 A1 8/2009 Yamada
2009/0223033 A1 9/2009 Houser
2009/0240244 A1 9/2009 Malis et al.
2009/0248021 A1 10/2009 McKenna
2009/0254077 A1 10/2009 Craig
2009/0254080 A1 10/2009 Honda
2009/0264909 A1 10/2009 Beaupre
2009/0270771 A1 10/2009 Takahashi
2009/0270812 A1 10/2009 Litscher et al.
2009/0270853 A1 10/2009 Yachi et al.
2009/0270891 A1 10/2009 Beaupre
2009/0270899 A1 10/2009 Carusillo et al.
2009/0287205 A1 11/2009 Ingle
2009/0299141 A1 12/2009 Downey et al.
2009/0327715 A1 12/2009 Smith et al.
2010/0004508 A1 1/2010 Naito et al.
2010/0022825 A1 1/2010 Yoshie
2010/0030233 A1 2/2010 Whitman et al.
2010/0036370 A1 2/2010 Mirel et al.
2010/0049180 A1 2/2010 Wells et al.
2010/0057118 A1 3/2010 Dietz et al.
2010/0063525 A1 3/2010 Beaupre et al.
2010/0063528 A1 3/2010 Beaupre
2010/0081863 A1 4/2010 Hess et al.
2010/0081864 A1 4/2010 Hess et al.
2010/0081883 A1 4/2010 Murray et al.
2010/0094323 A1 4/2010 Isaacs et al.
2010/0106173 A1 4/2010 Yoshimine
2010/0158307 A1 6/2010 Kubota et al.
2010/0168741 A1 7/2010 Sanai et al.
2010/0187283 A1 7/2010 Crainich et al.
2010/0204721 A1 8/2010 Young et al.
2010/0222714 A1 9/2010 Muir et al.
2010/0222752 A1 9/2010 Collins, Jr. et al.
2010/0228250 A1 9/2010 Brogna
2010/0234906 A1 9/2010 Koh
2010/0274160 A1 10/2010 Yachi et al.
2010/0274278 A1 10/2010 Fleenor et al.
2010/0298743 A1 11/2010 Nield et al.
2010/0331742 A1 12/2010 Masuda
2011/0004233 A1 1/2011 Muir et al.
2011/0028964 A1 2/2011 Edwards
2011/0082486 A1* 4/2011 Messerly ..... A61B 17/320092 606/169
2011/0087220 A1 4/2011 Felder et al.
2011/0125149 A1 5/2011 El-Galley et al.
2011/0125151 A1 5/2011 Strauss et al.
2011/0238010 A1 9/2011 Kirschenman et al.

(56) **References Cited**

U.S. PATENT DOCUMENTS

2011/0276049 A1 11/2011 Gerhardt
2011/0278343 A1 11/2011 Knodel et al.
2011/0284014 A1 11/2011 Cadeddu et al.
2011/0290856 A1 12/2011 Shelton, IV et al.
2011/0295295 A1 12/2011 Shelton, IV et al.
2011/0306967 A1 12/2011 Payne et al.
2011/0313415 A1 12/2011 Fernandez et al.
2012/0004655 A1 1/2012 Kim et al.
2012/0016413 A1 1/2012 Timm et al.
2012/0022519 A1 1/2012 Huang et al.
2012/0022526 A1 1/2012 Aldridge et al.
2012/0022583 A1 1/2012 Sugalski et al.
2012/0059289 A1 3/2012 Nield et al.
2012/0071863 A1 3/2012 Lee et al.
2012/0078139 A1 3/2012 Aldridge et al.
2012/0078244 A1 3/2012 Worrell et al.
2012/0080344 A1 4/2012 Shelton, IV
2012/0101495 A1 4/2012 Young et al.
2012/0109186 A1 5/2012 Parrott et al.
2012/0116265 A1 5/2012 Houser et al.
2012/0116381 A1 5/2012 Houser et al.
2012/0143211 A1 6/2012 Kishi
2012/0150049 A1 6/2012 Zielinski et al.
2012/0150169 A1 6/2012 Zielinksi et al.
2012/0172904 A1 7/2012 Muir et al.
2012/0253328 A1 10/2012 Cunningham et al.
2012/0265241 A1 10/2012 Hart et al.
2012/0296371 A1 11/2012 Kappus et al.
2013/0023925 A1 1/2013 Mueller
2013/0035685 A1 2/2013 Fischer et al.
2013/0085510 A1 4/2013 Stefanchik et al.
2013/0123776 A1 5/2013 Monson et al.
2013/0158659 A1 6/2013 Bergs et al.
2013/0158660 A1 6/2013 Bergs et al.
2013/0165929 A1 6/2013 Muir et al.
2013/0214025 A1 8/2013 Zemlok et al.
2013/0253256 A1 9/2013 Griffith et al.
2013/0296843 A1 11/2013 Boudreaux et al.
2013/0338647 A1 12/2013 Bacher et al.
2014/0001231 A1 1/2014 Shelton, IV et al.
2014/0001234 A1 1/2014 Shelton, IV et al.
2014/0005640 A1 1/2014 Shelton, IV et al.
2014/0005678 A1 1/2014 Shelton, IV et al.
2014/0005702 A1 1/2014 Timm et al.
2014/0005705 A1 1/2014 Weir et al.
2014/0005718 A1 1/2014 Shelton, IV et al.
2014/0012299 A1 1/2014 Stoddard et al.
2014/0014544 A1 1/2014 Bugnard et al.
2014/0114327 A1 4/2014 Boudreaux et al.
2014/0121569 A1 5/2014 Schafer et al.
2014/0135804 A1 5/2014 Weisenburgh, II et al.
2014/0194874 A1 7/2014 Dietz et al.
2014/0194875 A1 7/2014 Reschke et al.
2014/0246475 A1 9/2014 Hall et al.
2014/0263541 A1 9/2014 Leimbach et al.
2014/0276659 A1 9/2014 Juergens et al.
2014/0276797 A1 9/2014 Batchelor et al.
2014/0276970 A1 9/2014 Messerly et al.
2014/0330271 A1 11/2014 Dietz et al.
2015/0032100 A1 1/2015 Coulson et al.
2015/0032150 A1 1/2015 Ishida et al.
2015/0080876 A1 3/2015 Worrell et al.
2015/0080887 A1 3/2015 Sobajima et al.
2015/0080912 A1 3/2015 Sapre
2015/0088124 A1 3/2015 Wham
2015/0088178 A1 3/2015 Stulen et al.
2015/0112335 A1 4/2015 Boudreaux et al.
2015/0157356 A1 6/2015 Gee
2015/0164533 A1 6/2015 Felder et al.
2015/0164534 A1 6/2015 Felder et al.
2015/0164535 A1 6/2015 Felder et al.
2015/0164536 A1 6/2015 Czarnecki et al.
2015/0164537 A1 6/2015 Cagle et al.
2015/0164538 A1 6/2015 Aldridge et al.
2015/0182276 A1 7/2015 Wiener et al.
2015/0182277 A1 7/2015 Wiener et al.
2015/0230853 A1 8/2015 Johnson et al.
2015/0230861 A1 8/2015 Woloszko et al.
2015/0257780 A1 9/2015 Houser
2015/0272659 A1 10/2015 Boudreaux et al.
2015/0272660 A1 10/2015 Boudreaux et al.
2015/0313667 A1 11/2015 Allen, IV
2015/0320480 A1 11/2015 Cosman, Jr. et al.
2015/0320481 A1 11/2015 Cosman, Jr. et al.
2015/0340586 A1 11/2015 Wiener et al.
2016/0030076 A1 2/2016 Faller et al.
2016/0045248 A1 2/2016 Unger et al.
2016/0051316 A1 2/2016 Boudreaux
2016/0051317 A1 2/2016 Boudreaux
2016/0058492 A1 3/2016 Yates et al.
2016/0074108 A1 3/2016 Woodruff et al.
2016/0128762 A1 5/2016 Harris et al.
2016/0144204 A1 5/2016 Akagane
2016/0157927 A1 6/2016 Corbett et al.
2016/0175024 A1 6/2016 Yates et al.
2016/0175029 A1 6/2016 Witt et al.
2016/0175032 A1 6/2016 Yang
2016/0199123 A1 7/2016 Thomas et al.
2016/0199125 A1 7/2016 Jones
2016/0206342 A1 7/2016 Robertson et al.
2016/0228171 A1 8/2016 Boudreaux
2016/0262786 A1 9/2016 Madan et al.
2016/0270840 A1 9/2016 Yates et al.
2016/0270841 A1 9/2016 Strobl et al.
2016/0270842 A1 9/2016 Strobl et al.
2016/0270843 A1 9/2016 Boudreaux et al.
2016/0278848 A1 9/2016 Boudreaux et al.
2016/0287311 A1 10/2016 Friedrichs
2016/0296249 A1 10/2016 Robertson
2016/0296250 A1 10/2016 Olson et al.
2016/0296251 A1 10/2016 Olson et al.
2016/0296252 A1 10/2016 Olson et al.
2016/0296268 A1 10/2016 Gee et al.
2016/0296270 A1 10/2016 Strobl et al.
2016/0302844 A1 10/2016 Strobl et al.
2016/0317217 A1 11/2016 Batross et al.
2016/0338726 A1 11/2016 Stulen et al.
2016/0346001 A1 12/2016 Vakharia et al.
2016/0367273 A1 12/2016 Robertson et al.
2016/0367281 A1 12/2016 Gee et al.
2016/0374708 A1 12/2016 Wiener et al.
2016/0374709 A1 12/2016 Timm et al.
2016/0374712 A1 12/2016 Stulen et al.
2016/0374752 A1 12/2016 Hancock et al.
2017/0000512 A1 1/2017 Conlon et al.
2017/0000513 A1 1/2017 Conlon et al.
2017/0000516 A1 1/2017 Stulen et al.
2017/0000541 A1 1/2017 Yates et al.
2017/0000542 A1 1/2017 Yates et al.
2017/0000553 A1 1/2017 Wiener et al.
2017/0000554 A1 1/2017 Yates et al.
2017/0056056 A1 3/2017 Wiener et al.
2017/0056058 A1 3/2017 Voegele et al.
2017/0086876 A1 3/2017 Wiener et al.
2017/0086908 A1 3/2017 Wiener et al.
2017/0086909 A1 3/2017 Yates et al.
2017/0086910 A1 3/2017 Wiener et al.
2017/0086911 A1 3/2017 Wiener et al.
2017/0086912 A1 3/2017 Wiener et al.
2017/0086913 A1 3/2017 Yates et al.
2017/0086914 A1 3/2017 Wiener et al.
2017/0090507 A1 3/2017 Wiener et al.
2017/0105757 A1 4/2017 Weir et al.
2017/0105782 A1 4/2017 Scheib et al.
2017/0105786 A1 4/2017 Scheib et al.
2017/0105791 A1 4/2017 Yates et al.
2017/0143371 A1 5/2017 Witt et al.
2017/0143877 A1 5/2017 Witt et al.
2017/0189095 A1 7/2017 Danziger et al.
2017/0189096 A1 7/2017 Danziger et al.
2017/0189101 A1 7/2017 Yates et al.
2017/0196586 A1 7/2017 Witt et al.
2017/0196587 A1 7/2017 Witt et al.
2017/0202570 A1 7/2017 Shelton, IV et al.

(56) **References Cited**

U.S. PATENT DOCUMENTS

| | | | |
|---|---|---|---|
| 2017/0202571 | A1 | 7/2017 | Shelton, IV et al. |
| 2017/0202572 | A1 | 7/2017 | Shelton, IV et al. |
| 2017/0202591 | A1 | 7/2017 | Shelton, IV et al. |
| 2017/0202592 | A1 | 7/2017 | Shelton, IV et al. |
| 2017/0202593 | A1 | 7/2017 | Shelton, IV et al. |
| 2017/0202594 | A1 | 7/2017 | Shelton, IV et al. |
| 2017/0202595 | A1 | 7/2017 | Shelton, IV |
| 2017/0202596 | A1 | 7/2017 | Shelton, IV et al. |
| 2017/0202597 | A1 | 7/2017 | Shelton, IV et al. |
| 2017/0202598 | A1 | 7/2017 | Shelton, IV et al. |
| 2017/0202599 | A1 | 7/2017 | Shelton, IV et al. |
| 2017/0202605 | A1 | 7/2017 | Shelton, IV et al. |
| 2017/0202607 | A1 | 7/2017 | Shelton, IV et al. |
| 2017/0202608 | A1 | 7/2017 | Shelton, IV et al. |
| 2017/0202609 | A1 | 7/2017 | Shelton, IV et al. |
| 2017/0207467 | A1 | 7/2017 | Shelton, IV et al. |
| 2017/0209167 | A1 | 7/2017 | Nield |
| 2017/0238991 | A1 | 8/2017 | Worrell et al. |
| 2017/0245875 | A1 | 8/2017 | Timm et al. |
| 2017/0312014 | A1 | 11/2017 | Strobl et al. |
| 2017/0312015 | A1 | 11/2017 | Worrell et al. |
| 2017/0312016 | A1 | 11/2017 | Strobl et al. |
| 2017/0319228 | A1 | 11/2017 | Worrell et al. |
| 2017/0319265 | A1 | 11/2017 | Yates et al. |
| 2017/0348064 | A1 | 12/2017 | Stewart et al. |
| 2018/0014872 | A1 | 1/2018 | Dickerson |
| 2018/0028257 | A1 | 2/2018 | Yates et al. |
| 2018/0036061 | A1 | 2/2018 | Yates et al. |
| 2018/0036065 | A1 | 2/2018 | Yates et al. |
| 2018/0042658 | A1 | 2/2018 | Shelton, IV et al. |
| 2018/0064961 | A1 | 3/2018 | Wiener et al. |
| 2018/0098785 | A1 | 4/2018 | Price et al. |
| 2018/0098808 | A1 | 4/2018 | Yates et al. |
| 2018/0116706 | A9 | 5/2018 | Wiener et al. |
| 2018/0146976 | A1 | 5/2018 | Clauda et al. |
| 2018/0177545 | A1 | 6/2018 | Boudreaux et al. |
| 2018/0235691 | A1 | 8/2018 | Voegele et al. |
| 2018/0280083 | A1 | 10/2018 | Parihar et al. |

FOREIGN PATENT DOCUMENTS

| | | | |
|---|---|---|---|
| CN | 1233944 | A | 11/1999 |
| CN | 1253485 | A | 5/2000 |
| CN | 2460047 | Y | 11/2001 |
| CN | 1634601 | A | 7/2005 |
| CN | 1640365 | A | 7/2005 |
| CN | 1694649 | A | 11/2005 |
| CN | 1775323 | A | 5/2006 |
| CN | 1922563 | A | 2/2007 |
| CN | 2868227 | Y | 2/2007 |
| CN | 1951333 | A | 4/2007 |
| CN | 101035482 | A | 9/2007 |
| CN | 101040799 | A | 9/2007 |
| CN | 101396300 | A | 4/2009 |
| CN | 101467917 | A | 7/2009 |
| CN | 101474081 | A | 7/2009 |
| CN | 101674782 | A | 3/2010 |
| CN | 101883531 | A | 11/2010 |
| CN | 102160045 | A | 8/2011 |
| CN | 202027624 | U | 11/2011 |
| CN | 102834069 | A | 12/2012 |
| CN | 101313865 | B | 1/2013 |
| DE | 3904558 | A1 | 8/1990 |
| DE | 9210327 | U1 | 11/1992 |
| DE | 4300307 | A1 | 7/1994 |
| DE | 4323585 | A1 | 1/1995 |
| DE | 19608716 | C1 | 4/1997 |
| DE | 29623113 | U1 | 10/1997 |
| DE | 20004812 | U1 | 9/2000 |
| DE | 20021619 | U1 | 3/2001 |
| DE | 10042606 | A1 | 8/2001 |
| DE | 10201569 | A1 | 7/2003 |
| EP | 0171967 | A2 | 2/1986 |
| EP | 0336742 | A2 | 10/1989 |
| EP | 0136855 | B1 | 11/1989 |
| EP | 0342448 | A1 | 11/1989 |
| EP | 0443256 | A1 | 8/1991 |
| EP | 0456470 | A1 | 11/1991 |
| EP | 0238667 | B1 | 2/1993 |
| EP | 0340803 | B1 | 8/1993 |
| EP | 0598976 | A2 | 6/1994 |
| EP | 0630612 | A1 | 12/1994 |
| EP | 0424685 | B1 | 5/1995 |
| EP | 0677275 | A2 | 10/1995 |
| EP | 0482195 | B1 | 1/1996 |
| EP | 0695535 | A1 | 2/1996 |
| EP | 0705571 | A1 | 4/1996 |
| EP | 0741996 | B1 | 11/1996 |
| EP | 0612570 | B1 | 6/1997 |
| EP | 0557806 | B1 | 5/1998 |
| EP | 0640317 | B1 | 9/1999 |
| EP | 1108394 | A2 | 6/2001 |
| EP | 1138264 | A1 | 10/2001 |
| EP | 0908148 | B1 | 1/2002 |
| EP | 1229515 | A2 | 8/2002 |
| EP | 0722696 | B1 | 12/2002 |
| EP | 1285634 | A1 | 2/2003 |
| EP | 0908155 | B1 | 6/2003 |
| EP | 0705570 | B1 | 4/2004 |
| EP | 0765637 | B1 | 7/2004 |
| EP | 0870473 | B1 | 9/2005 |
| EP | 0624346 | B1 | 11/2005 |
| EP | 1594209 | A1 | 11/2005 |
| EP | 1199044 | B1 | 12/2005 |
| EP | 1609428 | A1 | 12/2005 |
| EP | 1199043 | B1 | 3/2006 |
| EP | 1293172 | B1 | 4/2006 |
| EP | 0875209 | B1 | 5/2006 |
| EP | 1433425 | B1 | 6/2006 |
| EP | 1256323 | B1 | 8/2006 |
| EP | 1698289 | A2 | 9/2006 |
| EP | 1704824 | A1 | 9/2006 |
| EP | 1749479 | A1 | 2/2007 |
| EP | 1767157 | A1 | 3/2007 |
| EP | 1254637 | B1 | 8/2007 |
| EP | 1815950 | A1 | 8/2007 |
| EP | 1839599 | A1 | 10/2007 |
| EP | 1844720 | A1 | 10/2007 |
| EP | 1862133 | A1 | 12/2007 |
| EP | 1875875 | A1 | 1/2008 |
| EP | 1878399 | A1 | 1/2008 |
| EP | 1915953 | A1 | 4/2008 |
| EP | 1532933 | B1 | 5/2008 |
| EP | 1199045 | B1 | 6/2008 |
| EP | 1707143 | B1 | 6/2008 |
| EP | 1943957 | A2 | 7/2008 |
| EP | 1964530 | A1 | 9/2008 |
| EP | 1972264 | A1 | 9/2008 |
| EP | 1974771 | A1 | 10/2008 |
| EP | 1435852 | B1 | 12/2008 |
| EP | 1498082 | B1 | 12/2008 |
| EP | 1707131 | B1 | 12/2008 |
| EP | 1477104 | B1 | 1/2009 |
| EP | 2014218 | A2 | 1/2009 |
| EP | 1849424 | B1 | 4/2009 |
| EP | 2042112 | A2 | 4/2009 |
| EP | 2042117 | A1 | 4/2009 |
| EP | 2060238 | A1 | 5/2009 |
| EP | 1832259 | B1 | 6/2009 |
| EP | 2074959 | A1 | 7/2009 |
| EP | 1810625 | B1 | 8/2009 |
| EP | 2090256 | A2 | 8/2009 |
| EP | 2092905 | A1 | 8/2009 |
| EP | 2105104 | A2 | 9/2009 |
| EP | 1747761 | B1 | 10/2009 |
| EP | 2106758 | A1 | 10/2009 |
| EP | 2111813 | A1 | 10/2009 |
| EP | 2131760 | A1 | 12/2009 |
| EP | 1769766 | B1 | 2/2010 |
| EP | 2151204 | A1 | 2/2010 |
| EP | 2153791 | A1 | 2/2010 |
| EP | 2200145 | A1 | 6/2010 |
| EP | 1214913 | B1 | 7/2010 |
| EP | 2238938 | A1 | 10/2010 |

(56) **References Cited**

FOREIGN PATENT DOCUMENTS

| | | | |
|---|---|---|---|
| EP | 2243439 | A1 | 10/2010 |
| EP | 2298154 | A2 | 3/2011 |
| EP | 2305144 | A1 | 4/2011 |
| EP | 1510178 | B1 | 6/2011 |
| EP | 1946708 | B1 | 6/2011 |
| EP | 2335630 | A1 | 6/2011 |
| EP | 1502551 | B1 | 7/2011 |
| EP | 1728475 | B1 | 8/2011 |
| EP | 2353518 | A1 | 8/2011 |
| EP | 2361562 | A1 | 8/2011 |
| EP | 2365608 | A2 | 9/2011 |
| EP | 2420197 | A2 | 2/2012 |
| EP | 2422721 | A2 | 2/2012 |
| EP | 1927321 | B1 | 4/2012 |
| EP | 2436327 | A1 | 4/2012 |
| EP | 2529681 | A1 | 12/2012 |
| EP | 1767164 | B1 | 1/2013 |
| EP | 2316359 | B1 | 3/2013 |
| EP | 2090238 | B1 | 4/2013 |
| EP | 2578172 | A2 | 4/2013 |
| EP | 1586275 | B1 | 5/2013 |
| EP | 1616529 | B1 | 9/2013 |
| EP | 1997438 | B1 | 11/2013 |
| EP | 2508143 | B1 | 2/2014 |
| EP | 2583633 | B1 | 10/2014 |
| EP | 2076195 | B1 | 12/2015 |
| EP | 2113210 | B1 | 3/2016 |
| EP | 2510891 | B1 | 6/2016 |
| EP | 2227155 | B1 | 7/2016 |
| EP | 2859858 | B1 | 12/2016 |
| ES | 2115068 | T3 | 6/1998 |
| GB | 1482943 | A | 8/1977 |
| GB | 2032221 | A | 4/1980 |
| GB | 2317566 | A | 4/1998 |
| GB | 2379878 | B | 11/2004 |
| GB | 2472216 | A | 2/2011 |
| GB | 2447767 | B | 8/2011 |
| JP | S50100891 | A | 8/1975 |
| JP | S5968513 | U | 5/1984 |
| JP | S59141938 | A | 8/1984 |
| JP | S62221343 | A | 9/1987 |
| JP | S62227343 | A | 10/1987 |
| JP | S2292154 | A | 12/1987 |
| JP | S62292153 | A | 12/1987 |
| JP | S63109386 | A | 5/1988 |
| JP | S63315049 | A | 12/1988 |
| JP | H01151452 | A | 6/1989 |
| JP | H01198540 | A | 8/1989 |
| JP | H0271510 | U | 5/1990 |
| JP | H02286149 | A | 11/1990 |
| JP | H02292193 | A | 12/1990 |
| JP | H0337061 | A | 2/1991 |
| JP | H0425707 | U | 2/1992 |
| JP | H0464351 | A | 2/1992 |
| JP | H0430508 | U | 3/1992 |
| JP | H04150847 | A | 5/1992 |
| JP | H04152942 | A | 5/1992 |
| JP | H0595955 | A | 4/1993 |
| JP | H05115490 | A | 5/1993 |
| JP | H0670938 | A | 3/1994 |
| JP | H06104503 | A | 4/1994 |
| JP | H06217988 | A | 8/1994 |
| JP | H06507081 | A | 8/1994 |
| JP | H 07500514 | A | 1/1995 |
| JP | H07508910 | A | 10/1995 |
| JP | H07308323 | A | 11/1995 |
| JP | H0824266 | A | 1/1996 |
| JP | H08229050 | A | 9/1996 |
| JP | H08275951 | A | 10/1996 |
| JP | H08299351 | A | 11/1996 |
| JP | H08336544 | A | 12/1996 |
| JP | H08336545 | A | 12/1996 |
| JP | H09503146 | A | 3/1997 |
| JP | H09135553 | A | 5/1997 |
| JP | H09140722 | A | 6/1997 |
| JP | H105237 | A | 1/1998 |
| JP | H10295700 | A | 11/1998 |
| JP | H11501543 | A | 2/1999 |
| JP | H11128238 | A | 5/1999 |
| JP | H11192235 | A | 7/1999 |
| JP | H11253451 | A | 9/1999 |
| JP | H11318918 | A | 11/1999 |
| JP | 2000041991 | A | 2/2000 |
| JP | 2000070279 | A | 3/2000 |
| JP | 2000210299 | A | 8/2000 |
| JP | 2000271145 | A | 10/2000 |
| JP | 2000287987 | A | 10/2000 |
| JP | 2001029353 | A | 2/2001 |
| JP | 2001502216 | A | 2/2001 |
| JP | 2001309925 | A | 11/2001 |
| JP | 2002059380 | A | 2/2002 |
| JP | 2002177295 | A | 6/2002 |
| JP | 2002186901 | A | 7/2002 |
| JP | 2002204808 | A | 7/2002 |
| JP | 2002238919 | A | 8/2002 |
| JP | 2002263579 | A | 9/2002 |
| JP | 2002301086 | A | 10/2002 |
| JP | 2002306504 | A | 10/2002 |
| JP | 2002330977 | A | 11/2002 |
| JP | 2002542690 | A | 12/2002 |
| JP | 2003000612 | A | 1/2003 |
| JP | 2003010201 | A | 1/2003 |
| JP | 2003510158 | A | 3/2003 |
| JP | 2003116870 | A | 4/2003 |
| JP | 2003126104 | A | 5/2003 |
| JP | 2003126110 | A | 5/2003 |
| JP | 2003153919 | A | 5/2003 |
| JP | 2003530921 | A | 10/2003 |
| JP | 2003310627 | A | 11/2003 |
| JP | 2003339730 | A | 12/2003 |
| JP | 2004129871 | A | 4/2004 |
| JP | 2004147701 | A | 5/2004 |
| JP | 2005003496 | A | 1/2005 |
| JP | 2005027026 | A | 1/2005 |
| JP | 2005040222 | A | 2/2005 |
| JP | 2005066316 | A | 3/2005 |
| JP | 2005074088 | A | 3/2005 |
| JP | 2005507679 | A | 3/2005 |
| JP | 2005534451 | A | 11/2005 |
| JP | 2005337119 | A | 12/2005 |
| JP | 2006006410 | A | 1/2006 |
| JP | 2006068396 | A | 3/2006 |
| JP | 2006075376 | A | 3/2006 |
| JP | 2006081664 | A | 3/2006 |
| JP | 2006114072 | A | 4/2006 |
| JP | 2006512149 | A | 4/2006 |
| JP | 2006116194 | A | 5/2006 |
| JP | 2006158525 | A | 6/2006 |
| JP | 2006217716 | A | 8/2006 |
| JP | 2006218296 | A | 8/2006 |
| JP | 2006288431 | A | 10/2006 |
| JP | 2007050181 | A | 3/2007 |
| JP | 2007-524459 | A | 8/2007 |
| JP | 2007229454 | A | 9/2007 |
| JP | 2007527747 | A | 10/2007 |
| JP | 2007296369 | A | 11/2007 |
| JP | 200801876 | A | 1/2008 |
| JP | 2008018226 | A | 1/2008 |
| JP | 200833644 | A | 2/2008 |
| JP | 2008036390 | A | 2/2008 |
| JP | 2008508065 | A | 3/2008 |
| JP | 2008119250 | A | 5/2008 |
| JP | 2008515562 | A | 5/2008 |
| JP | 2008521503 | A | 6/2008 |
| JP | 2008188160 | A | 8/2008 |
| JP | D1339835 | S | 8/2008 |
| JP | 2008212679 | A | 9/2008 |
| JP | 2008536562 | A | 9/2008 |
| JP | 2008284374 | A | 11/2008 |
| JP | 2009511206 | A | 3/2009 |
| JP | 2009082711 | A | 4/2009 |
| JP | 2009517181 | A | 4/2009 |
| JP | 4262923 | B2 | 5/2009 |
| JP | 2009523567 | A | 6/2009 |

(56) **References Cited**

FOREIGN PATENT DOCUMENTS

| | | | |
|---|---|---|---|
| JP | 2009148557 | A | 7/2009 |
| JP | 2009236177 | A | 10/2009 |
| JP | 2009254819 | A | 11/2009 |
| JP | 2010000336 | A | 1/2010 |
| JP | 2010009686 | A | 1/2010 |
| JP | 2010514923 | A | 5/2010 |
| JP | 2010121865 | A | 6/2010 |
| JP | 2010534522 | A | 11/2010 |
| JP | 2010540186 | A | 12/2010 |
| JP | 2011505198 | A | 2/2011 |
| JP | 2012/075899 | A | 4/2012 |
| JP | 2012071186 | A | 4/2012 |
| JP | 2012235658 | A | 11/2012 |
| JP | 5208761 | B2 | 6/2013 |
| JP | 5714508 | B2 | 5/2015 |
| JP | 2015515339 | A | 5/2015 |
| JP | 5836543 | B1 | 12/2015 |
| KR | 100789356 | B1 | 12/2007 |
| RU | 2154437 | C1 | 8/2000 |
| RU | 22035 | U1 | 3/2002 |
| RU | 2201169 | C2 | 3/2003 |
| RU | 2304934 | C2 | 8/2007 |
| RU | 2405603 | C1 | 12/2010 |
| SU | 850068 | A1 | 7/1981 |
| WO | WO-8103272 | A1 | 11/1981 |
| WO | WO-9222259 | A2 | 12/1992 |
| WO | WO-9307817 | A1 | 4/1993 |
| WO | WO-9308757 | A1 | 5/1993 |
| WO | WO-9314708 | A1 | 8/1993 |
| WO | WO-9316646 | A1 | 9/1993 |
| WO | WO-9320877 | A1 | 10/1993 |
| WO | WO-9322973 | A1 | 11/1993 |
| WO | WO-9400059 | A1 | 1/1994 |
| WO | WO-9421183 | A1 | 9/1994 |
| WO | WO-9424949 | A1 | 11/1994 |
| WO | WO-9509572 | A1 | 4/1995 |
| WO | WO-9510978 | A1 | 4/1995 |
| WO | WO-9534259 | A1 | 12/1995 |
| WO | WO-9630885 | A1 | 10/1996 |
| WO | WO-9635382 | A1 | 11/1996 |
| WO | WO-9639086 | A1 | 12/1996 |
| WO | WO-9710764 | A1 | 3/1997 |
| WO | WO-9800069 | A1 | 1/1998 |
| WO | WO-9816156 | A1 | 4/1998 |
| WO | WO-9826739 | A1 | 6/1998 |
| WO | WO-9835621 | A1 | 8/1998 |
| WO | WO-9837815 | A1 | 9/1998 |
| WO | WO-9840020 | A1 | 9/1998 |
| WO | WO-9847436 | A1 | 10/1998 |
| WO | WO-9857588 | A1 | 12/1998 |
| WO | WO-9920213 | A1 | 4/1999 |
| WO | WO-9923960 | A1 | 5/1999 |
| WO | WO-9940857 | A1 | 8/1999 |
| WO | WO-9940861 | A1 | 8/1999 |
| WO | WO-9952489 | A1 | 10/1999 |
| WO | WO-0024330 | A1 | 5/2000 |
| WO | WO-0024331 | A1 | 5/2000 |
| WO | WO-0025691 | A1 | 5/2000 |
| WO | WO-0064358 | A2 | 11/2000 |
| WO | WO-0074585 | A2 | 12/2000 |
| WO | WO-0124713 | A1 | 4/2001 |
| WO | WO-0128444 | A1 | 4/2001 |
| WO | WO-0154590 | A1 | 8/2001 |
| WO | WO-0167970 | A1 | 9/2001 |
| WO | WO-0172251 | A1 | 10/2001 |
| WO | WO-0195810 | A2 | 12/2001 |
| WO | WO-0224080 | A2 | 3/2002 |
| WO | WO-0238057 | A1 | 5/2002 |
| WO | WO-02062241 | A1 | 8/2002 |
| WO | WO-02080797 | A1 | 10/2002 |
| WO | WO-03001986 | A2 | 1/2003 |
| WO | WO-03013374 | A1 | 2/2003 |
| WO | WO-03020339 | A2 | 3/2003 |
| WO | WO-03028541 | A2 | 4/2003 |
| WO | WO-03030708 | A2 | 4/2003 |
| WO | WO-03068046 | A2 | 8/2003 |
| WO | WO-03082133 | A1 | 10/2003 |
| WO | WO-2004011037 | A2 | 2/2004 |
| WO | WO-2004012615 | A1 | 2/2004 |
| WO | WO-2004026104 | A2 | 4/2004 |
| WO | WO-2004032754 | A2 | 4/2004 |
| WO | WO-2004032762 | A1 | 4/2004 |
| WO | WO-2004032763 | A2 | 4/2004 |
| WO | WO-2004037095 | A2 | 5/2004 |
| WO | WO-2004060141 | A2 | 7/2004 |
| WO | WO-2004078051 | A2 | 9/2004 |
| WO | WO-2004098426 | A1 | 11/2004 |
| WO | WO-2004112618 | A2 | 12/2004 |
| WO | WO-2005052959 | A2 | 6/2005 |
| WO | WO-2005117735 | A1 | 12/2005 |
| WO | WO-2005122917 | A1 | 12/2005 |
| WO | WO-2006012797 | A1 | 2/2006 |
| WO | WO-2006021269 | A1 | 3/2006 |
| WO | WO-2006036706 | A1 | 4/2006 |
| WO | WO-2006042210 | A2 | 4/2006 |
| WO | WO-2006055166 | A2 | 5/2006 |
| WO | WO-2006058223 | A2 | 6/2006 |
| WO | WO-2006063199 | A2 | 6/2006 |
| WO | WO-2006083988 | A1 | 8/2006 |
| WO | WO-2006101661 | A2 | 9/2006 |
| WO | WO-2006119139 | A2 | 11/2006 |
| WO | WO-2006119376 | A2 | 11/2006 |
| WO | WO-2006129465 | A1 | 12/2006 |
| WO | WO-2007008703 | A2 | 1/2007 |
| WO | WO-2007008710 | A2 | 1/2007 |
| WO | WO-2007038538 | A1 | 4/2007 |
| WO | WO-2007040818 | A1 | 4/2007 |
| WO | WO-2007047380 | A2 | 4/2007 |
| WO | WO-2007047531 | A2 | 4/2007 |
| WO | WO-2007056590 | A1 | 5/2007 |
| WO | WO-2007087272 | A2 | 8/2007 |
| WO | WO-2007089724 | A2 | 8/2007 |
| WO | WO-2007143665 | A2 | 12/2007 |
| WO | WO-2008016886 | A2 | 2/2008 |
| WO | WO-2008020964 | A2 | 2/2008 |
| WO | WO-2008042021 | A1 | 4/2008 |
| WO | WO-2008045348 | A2 | 4/2008 |
| WO | WO-2008049084 | A2 | 4/2008 |
| WO | WO-2008051764 | A2 | 5/2008 |
| WO | WO-2008089174 | A2 | 7/2008 |
| WO | WO-2008099529 | A1 | 8/2008 |
| WO | WO-2008101356 | A1 | 8/2008 |
| WO | WO-2008118709 | A1 | 10/2008 |
| WO | WO-2008130793 | A1 | 10/2008 |
| WO | WO-2009010565 | A1 | 1/2009 |
| WO | WO-2009018067 | A1 | 2/2009 |
| WO | WO-2009018406 | A2 | 2/2009 |
| WO | WO-2009022614 | A1 | 2/2009 |
| WO | WO-2009027065 | A1 | 3/2009 |
| WO | WO-2009036818 | A1 | 3/2009 |
| WO | WO-2009039179 | A1 | 3/2009 |
| WO | WO-2009046234 | A2 | 4/2009 |
| WO | WO-2009059741 | A1 | 5/2009 |
| WO | WO-2009073402 | A2 | 6/2009 |
| WO | WO-2009082477 | A2 | 7/2009 |
| WO | WO-2009088550 | A2 | 7/2009 |
| WO | WO-2009120992 | A2 | 10/2009 |
| WO | WO-2009141616 | A1 | 11/2009 |
| WO | WO-2009149234 | A1 | 12/2009 |
| WO | WO-2010017149 | A1 | 2/2010 |
| WO | WO-2010017266 | A1 | 2/2010 |
| WO | WO-2010068783 | A1 | 6/2010 |
| WO | WO-2010104755 | A1 | 9/2010 |
| WO | WO-2011008672 | A2 | 1/2011 |
| WO | WO-2011/044338 | A2 | 4/2011 |
| WO | WO-2011044343 | A2 | 4/2011 |
| WO | WO-2011052939 | A2 | 5/2011 |
| WO | WO-2011060031 | A1 | 5/2011 |
| WO | WO-2011084768 | A1 | 7/2011 |
| WO | WO-2011089717 | A1 | 7/2011 |
| WO | WO-2011100321 | A2 | 8/2011 |
| WO | WO-2011144911 | A1 | 11/2011 |
| WO | WO-2012044597 | A1 | 4/2012 |
| WO | WO-2012044606 | A2 | 4/2012 |

(56) **References Cited**

FOREIGN PATENT DOCUMENTS

| | | | |
|---|---|---|---|
| WO | WO-2012061638 | A1 | 5/2012 |
| WO | WO-2012061722 | A2 | 5/2012 |
| WO | WO-2012128362 | A1 | 9/2012 |
| WO | WO-2012135705 | A1 | 10/2012 |
| WO | WO-2012135721 | A1 | 10/2012 |
| WO | WO-2012/150567 | A1 | 11/2012 |
| WO | WO-2012166510 | A1 | 12/2012 |
| WO | WO-2013018934 | A1 | 2/2013 |
| WO | WO-2013034629 | A1 | 3/2013 |
| WO | WO-2013062978 | A2 | 5/2013 |
| WO | WO-2013102602 | A2 | 7/2013 |
| WO | WO-2013154157 | A1 | 10/2013 |
| WO | WO-2014092108 | A1 | 6/2014 |
| WO | WO-2015197395 | A8 | 12/2015 |
| WO | WO-2016009921 | A1 | 1/2016 |

OTHER PUBLICATIONS

http://www.medicalexpo.com/medical-manufacturer/electrosurgical-generator-6951.html.

http://www.valleylab.com/product/es/generators/index.html.

AST Products, Inc., "Principles of Video Contact Angle Analysis," 20 pages, (2006).

Lim et al., "A Review of Mechanism Used in Laparoscopic Surgical Instruments," Mechanism and Machine Theory, vol. 38, pp. 1133-1147, (2003).

Sullivan, "Optimal Choice for Number of Strands in a Litz-Wire Transformer Winding," IEEE Transactions on Power Electronics, vol. 14, No. 2, Mar. 1999, pp. 283-291.

Makarov, S. N., Ochmann, M., Desinger, K., "The longitudinal vibration response of a curved fiber used for laser ultrasound surgical therapy," Journal of the Acoustical Society of America 102, 1191-1199 (1997).

Walsh, S. J., White, R. G., "Vibrational Power Transmission in Curved Beams," Journal of Sound and Vibration, 233(3), 455-488 (2000).

Covidien 501(k) Summary Sonicision, dated Feb. 24, 2011 (7 pages).

http:/www.ethicon.com/gb-en/healthcare-professionals/products/energy-devices/capital//ge . . . .

http://www.megadyne.com/es_generator.php.

Graff, K.F., "Elastic Wave Propagation in a Curved Sonic Transmission Line," IEEE Transactions on Sonics and Ultrasonics, SU-17(1), 1-6 (1970).

Morley, L. S. D., "Elastic Waves in a Naturally Curved Rod," Quarterly Journal of Mechanics and Applied Mathematics, 14: 155-172 (1961).

F. A. Duck, "Optical Properties of Tissue Including Ultraviolet and Infrared Radiation," pp. 43-71 in Physical Properties of Tissue (1990).

http://www.apicalinstr.com/generators.htm.

Technology Overview, printed from www.harmonicscalpel.com, Internet site, website accessed on Jun. 13, 2007, (3 pages).

Sherrit et al., "Novel Horn Designs for Ultrasonic/Sonic Cleaning Welding, Soldering, Cutting and Drilling," Proc. SPIE Smart Structures Conference, vol. 4701, Paper No. 34, San Diego, CA, pp. 353-360, Mar. 2002.

Huston et al., "Magnetic and Magnetostrictive Properties of Cube Textured Nickel for Magnetostrictive Transducer Applications," IEEE Transactions on Magnetics, vol. 9(4), pp. 636-640 (Dec. 1973).

Incropera et al., Fundamentals of Heat and Mass Transfer, Wiley, New York (1990). (Book—not attached).

Gooch et al., "Recommended Infection-Control Practices for Dentistry, 1993," Published: May 28, 1993; [retrieved on Aug. 23, 2008]. Retrieved from the internet: URL: http//wonder.cdc.gov/wonder/prevguid/p0000191/p0000191.asp (15 pages).

Sullivan, "Cost-Constrained Selection of Strand Diameter and Number in a Litz-Wire Transformer Winding," IEEE Transactions on Power Electronics, vol. 16, No. 2, Mar. 2001, pp. 281-288.

Orr et al., "Overview of Bioheat Transfer," pp. 367-384 in Optical-Thermal Response of Laser-Irradiated Tissue, A. J. Welch and M. J. C. van Gernert, eds., Plenum, New York (1995).

Fowler, K.R., "A Programmable, Arbitrary Waveform Electrosurgical Device," IEEE Engineering in Medicine and Biology Society 10th Annual International Conference, pp. 1324, 1325 (1988).

LaCourse, J.R.; Vogt, M.C.; Miller, W.T., III; Selikowitz, S.M., "Spectral Analysis Interpretation of Electrosurgical Generator Nerve and Muscle Stimulation," IEEE Transactions on Biomedical Engineering, vol. 35, No. 7, pp. 505-509, Jul. 1988.

Campbell et al, "Thermal Imaging in Surgery," p. 19-3, in Medical Infrared Imaging, N. A. Diakides and J. D. Bronzino, Eds. (2008).

Gerhard, Glen C., "Surgical Electrotechnology: Quo Vadis?," IEEE Transactions on Biomedical Engineering, vol. BME-31, No. 12, pp. 787-792, Dec. 1984.

http://www.4-traders.com/JOHNSON-JOHNSON-4832/news/Johnson-Johnson-Ethicon-E . . . .

Weir, C.E., "Rate of shrinkage of tendon collagen—heat, entropy and free energy of activation of the shrinkage of untreated tendon. Effect of acid salt, pickle, and tannage on the activation of tendon collagen." Journal of the American Leather Chemists Association, 44, pp. 108-140 (1949).

Henriques. F.C., "Studies in thermal injury V. The predictability and the significance of thermally induced rate processes leading to irreversible epidermal injury." Archives of Pathology, 434, pp. 489-502 (1947).

Arnoczky et al., "Thermal Modification of Conective Tissues: Basic Science Considerations and Clinical Implications," J. Am Acad Orthop Surg, vol. 8, No. 5, pp. 305-313 (Sep./Oct. 2000).

Chen et al., "Heat-Induced Changes in the Mechanics of a Collagenous Tissue: Isothermal Free Shrinkage," Transactions of the ASME, vol. 119, pp. 372-378 (Nov. 1997).

Chen et al., "Heat-Induced Changes in the Mechanics of a Collagenous Tissue: Isothermal, Isotonic Shrinkage," Transactions of the ASME, vol. 120, pp. 382-388 (Jun. 1998).

Chen et al., "Phenomenological Evolution Equations for Heat-Induced Shrinkage of a Collagenous Tissue," IEEE Transactions on Biomedical Engineering, vol. 45, No. 10, pp. 1234-1240 (Oct. 1998).

Harris et al., "Kinetics of Thermal Damage to a Collagenous Membrane Under Biaxial Isotonic Loading," IEEE Transactions on Biomedical Engineering, vol. 51, No. 2, pp. 371-379 (Feb. 2004).

Harris et al., "Altered Mechanical Behavior of Epicardium Due to Isothermal Heating Under Biaxial Isotonic Loads," Journal of Biomechanical Engineering, vol. 125, pp. 381-388 (Jun. 2003).

Lee et al., "A multi-sample denaturation temperature tester for collagenous biomaterials," Med. Eng. Phy., vol. 17, No. 2, pp. 115-121 (Mar. 1995).

Moran et al., "Thermally Induced Shrinkage of Joint Capsule," Clinical Orthopaedics and Related Research, No. 281, pp. 248-255 (Dec. 2000).

Wall et al., "Thermal modification of collagen," J Shoulder Elbow Surg, No. 8, pp. 339-344 (Jul./Aug. 1999).

Wells et al., "Altered Mechanical Behavior of Epicardium Under Isothermal Biaxial Loading," Transactions of the ASME, Journal of Biomedical Engineering, vol. 126, pp. 492-497 (Aug. 2004).

Gibson, "Magnetic Refrigerator Successfully Tested," U.S. Department of Energy Research News, accessed online on Aug. 6, 2010 at http://www.eurekalert.org/features/doe/2001-11/dl-mrs062802.php (Nov. 1, 2001).

Humphrey, J.D., "Continuum Thermomechanics and the Clinical Treatment of Disease and Injury," Appl. Mech. Rev., vol. 56, No. 2 pp. 231-260 (Mar. 2003).

National Semiconductors Temperature Sensor Handbook—http://www.national.com/appinfo/tempsensors/files/temphb.pdf; accessed online: Apr. 1, 2011.

Chen et al., "Heat-induced changes in the mechanics of a collagenous tissue: pseudoelastic behavior at 37° C.," Journal of Biomechanics, 31, pp. 211-216 (1998).

Kurt Gieck & Reiner Gieck, *Engineering Formulas* § Z.7 (7th ed. 1997).

Hayashi et al., "The Effect of Thermal Heating on the Length and Histologic Properties of the Glenohumeral Joint Capsule," Ameri-

(56) **References Cited**

OTHER PUBLICATIONS

can Journal of Sports Medicine, vol. 25, Issue 1, 11 pages (Jan. 1997), URL: http://www.mdconsult.com/das/article/body/156183648-2/jorg=journal&source=MI&sp=1 . . . , accessed Aug. 25, 2009.

Wright, et al., "Time-Temperature Equivalence of Heat-Induced Changes in Cells and Proteins," Feb. 1998. ASME Journal of Biomechanical Engineering, vol. 120, pp. 22-26.

Covidien Brochure, [Value Analysis Brief], LigaSure Advance™ Pistol Grip, dated Rev. Apr. 2010 (7 pages).

Covidien Brochure, LigaSure Impact™ Instrument LF4318, dated Feb. 2013 (3 pages).

Covidien Brochure, LigaSure Atlas™ Hand Switching Instruments, dated Dec. 2008 (2 pages).

Covidien Brochure, The LigaSure™ 5 mm Blunt Tip Sealer/Divider Family, dated Apr. 2013 (2 pages).

https://www.kjmagnetics.com/fieldcalculator.asp, retrieved Jul. 11, 2016, backdated to Nov. 11, 2011 via https://web.archive.org/web/20111116164447/http://www.kjmagnetics.com/fieldcalculator.asp.

Douglas, S.C. "Introduction to Adaptive Filter". Digital Signal Processing Handbook. Ed. Vijay K. Madisetti and Douglas B. Williams. Boca Raton: CRC Press LLC, 1999.

Leonard I. Malis, M.D., "The Value of Irrigation During Bipolar Coagulation," 1989.

Covidien Brochure, The LigaSure Precise™ Instrument, dated Mar. 2011 (2 pages).

Glaser and Subak-Sharpe,Integrated Circuit Engineering, Addison-Wesley Publishing, Reading, MA (1979). (book—not attached).

Jang, J. et al. "Neuro-fuzzy and Soft Computing." Prentice Hall, 1997, pp. 13-89, 199-293, 335-393, 453-496, 535-549.

Erbe Electrosurgery VIO® 200 S, (2012), p. 7, 12 pages, accessed Mar. 31, 2014 at http://www.erbe-med. com/erbe/media/Marketing materialien/85140170 ERBE EN VIO 200 S D027541.

Hörmann et al., "Reversible and irreversible denaturation of collagen fibers." Biochemistry, 10, pp. 932-937 (1971).

Dean, D.A., "Electrical Impedance Spectroscopy Study of Biological Tissues," J. Electrostat, 66(3-4), Mar. 2008, pp. 165-177. Accessed Apr. 10, 2018: https://www.ncbi.nlm.nih.gov/pmc/articles/PMC2597841/.

* cited by examiner

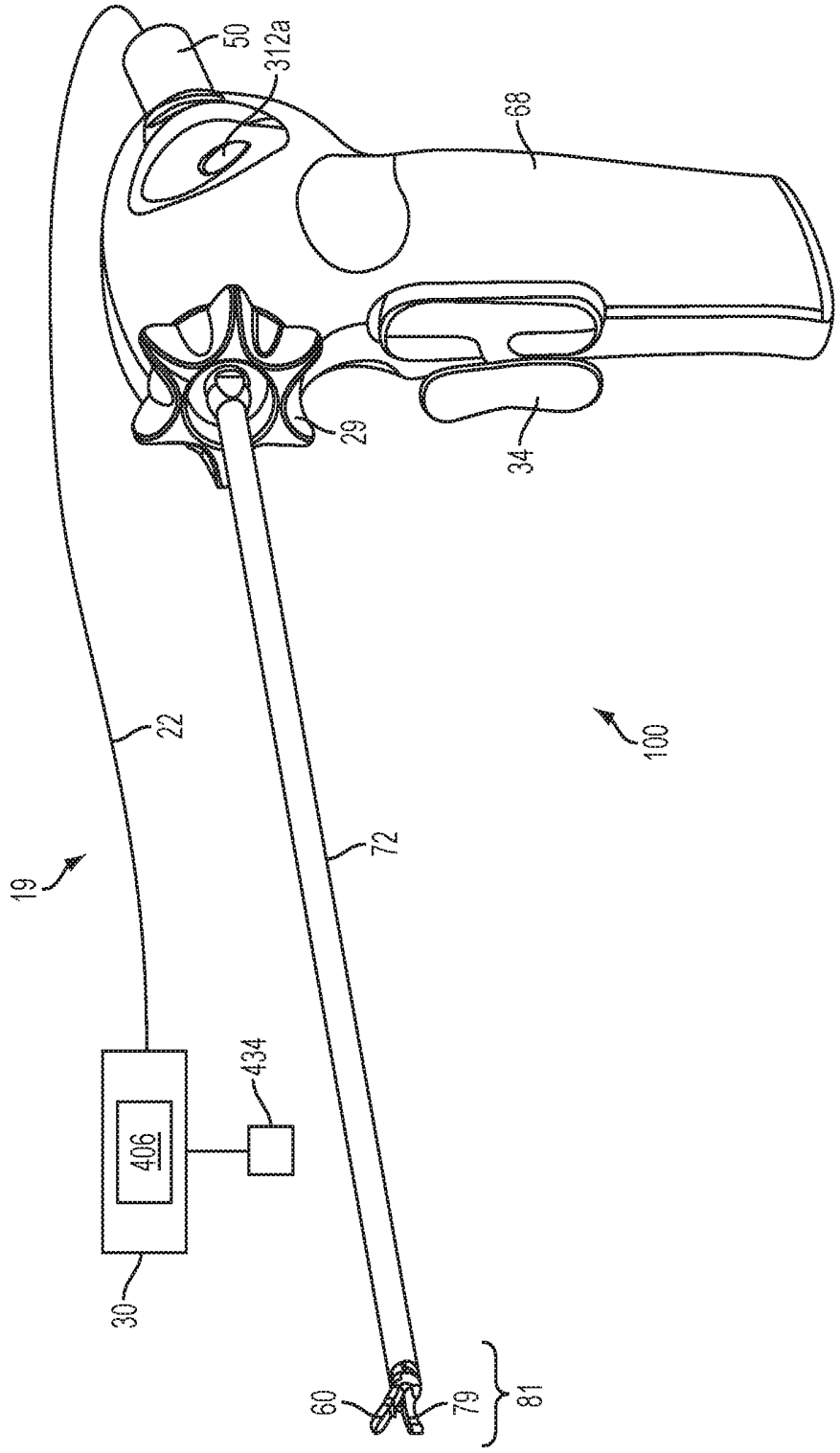


FIG. 1

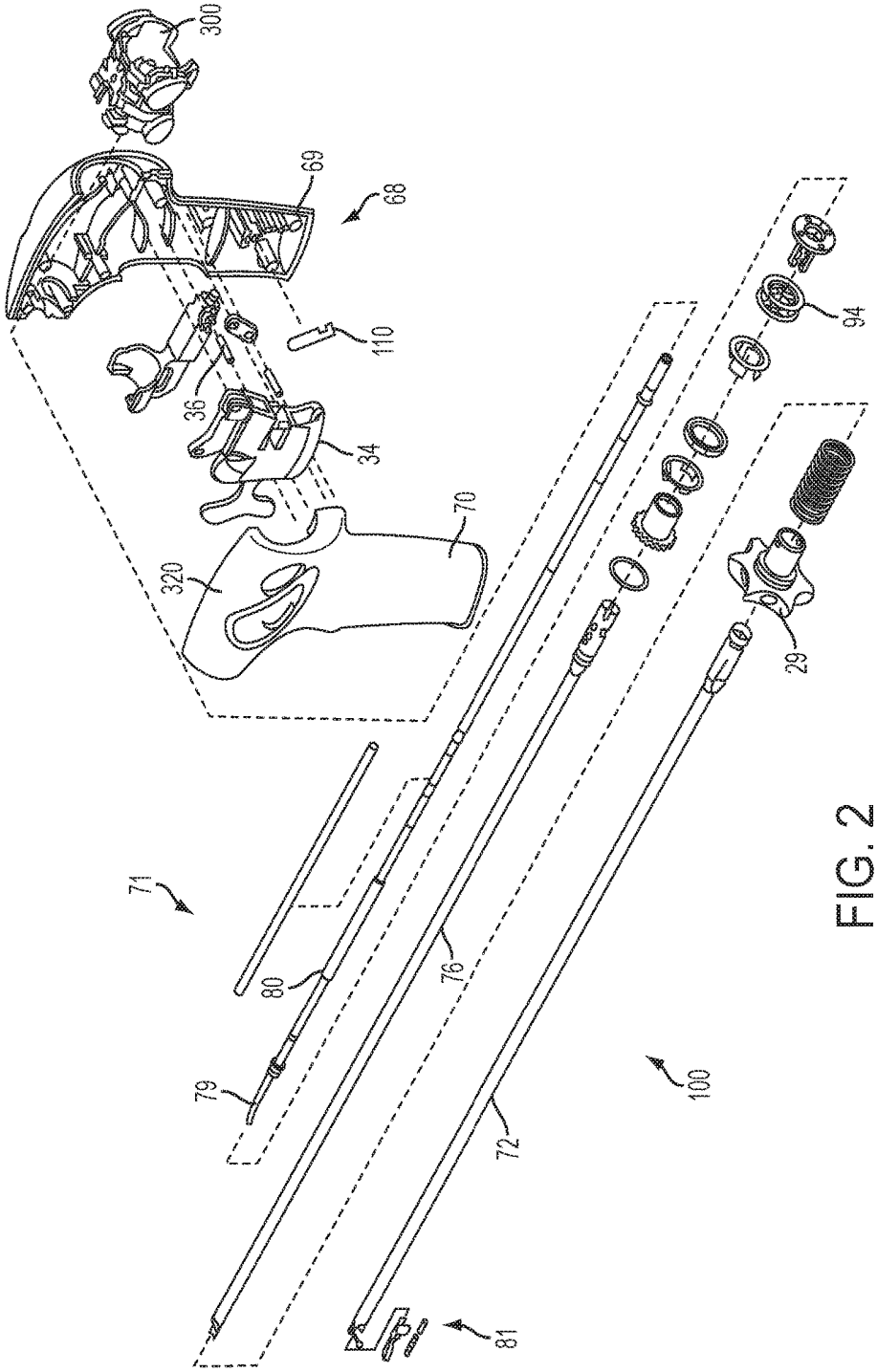


FIG. 2

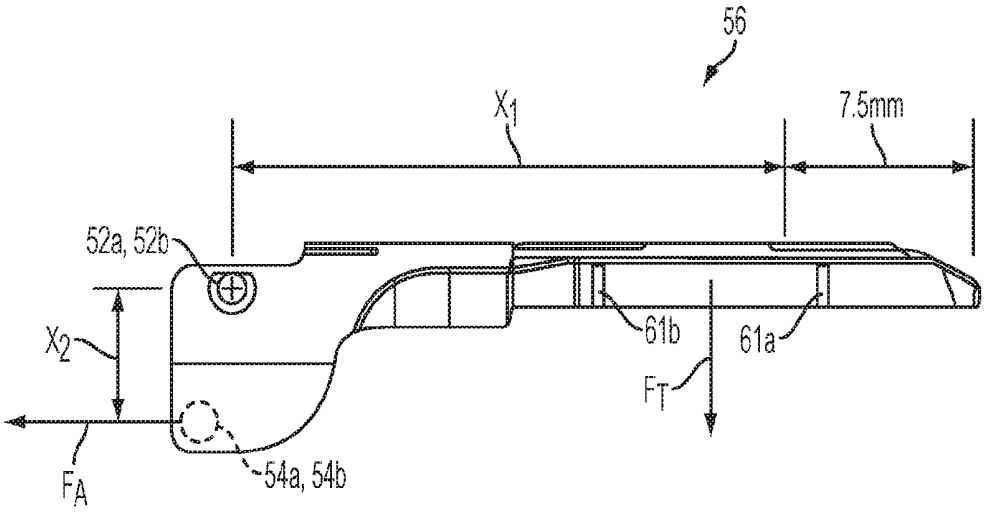


FIG. 3

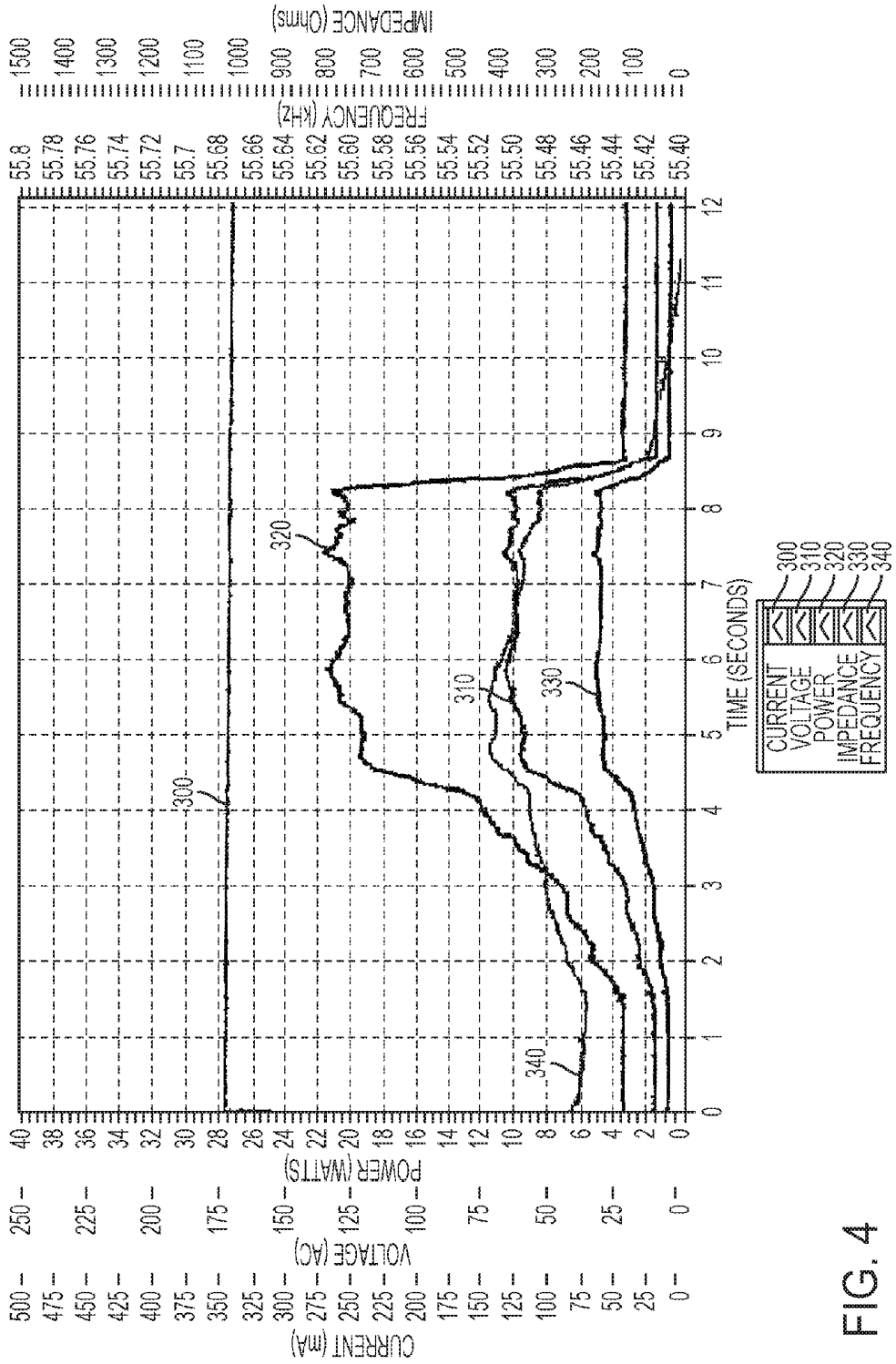
CURRENT (mA)
VOLTAGE (AC)
POWER (WATTS)
FREQUENCY (kHz)
IMPEDANCE (Ohms)
TIME (SECONDS)
CURRENT
VOLTAGE
POWER
IMPEDANCE
FREQUENCY
300
310
320
330
340

FIG. 4

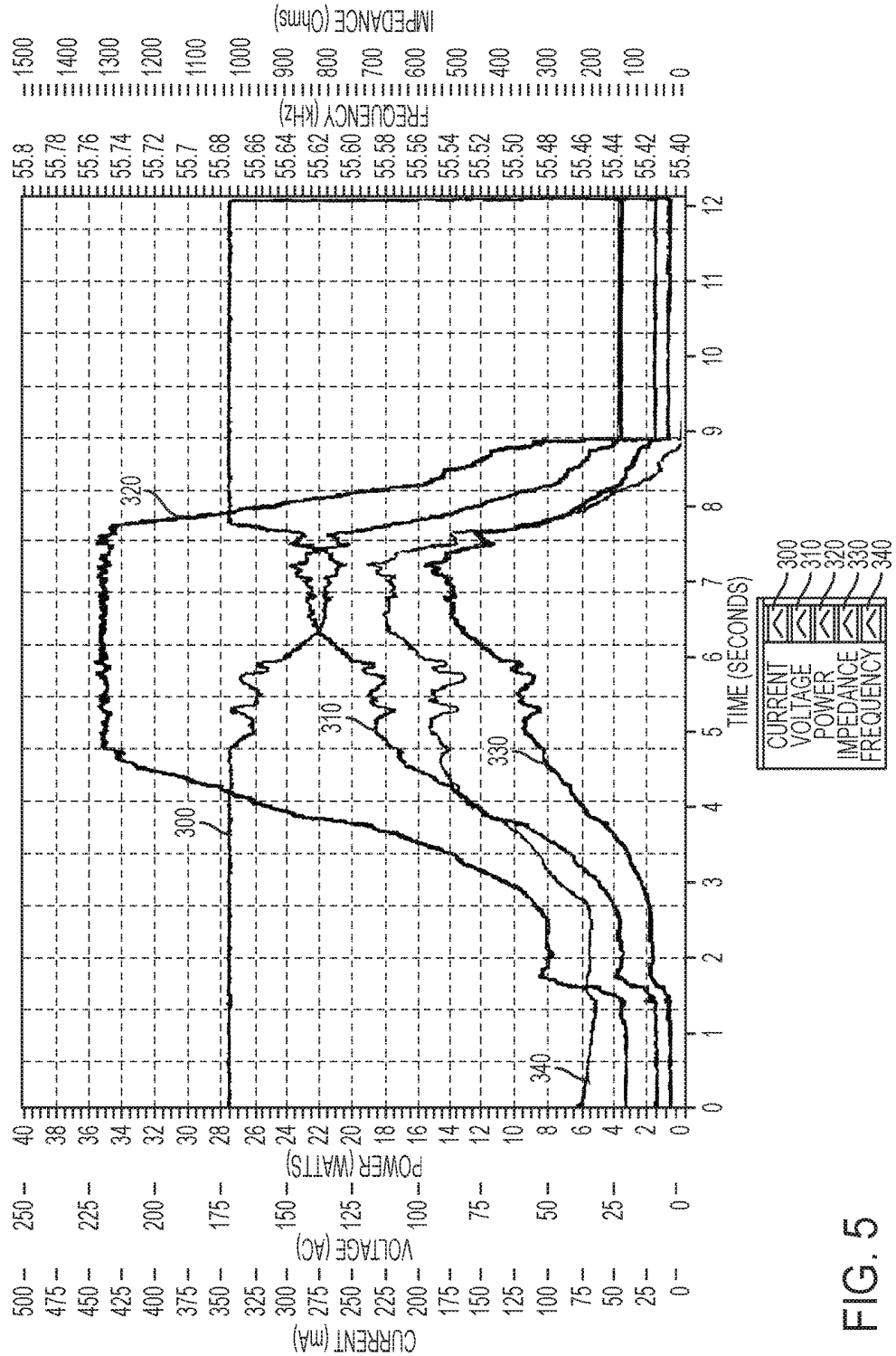
CURRENT (mA)
VOLTAGE (AC)
POWER (WATTS)
FREQUENCY (kHz)
IMPEDANCE (Ohms)
TIME (SECONDS)
CURRENT
VOLTAGE
POWER
IMPEDANCE
FREQUENCY
300
310
320
330
340

FIG. 5

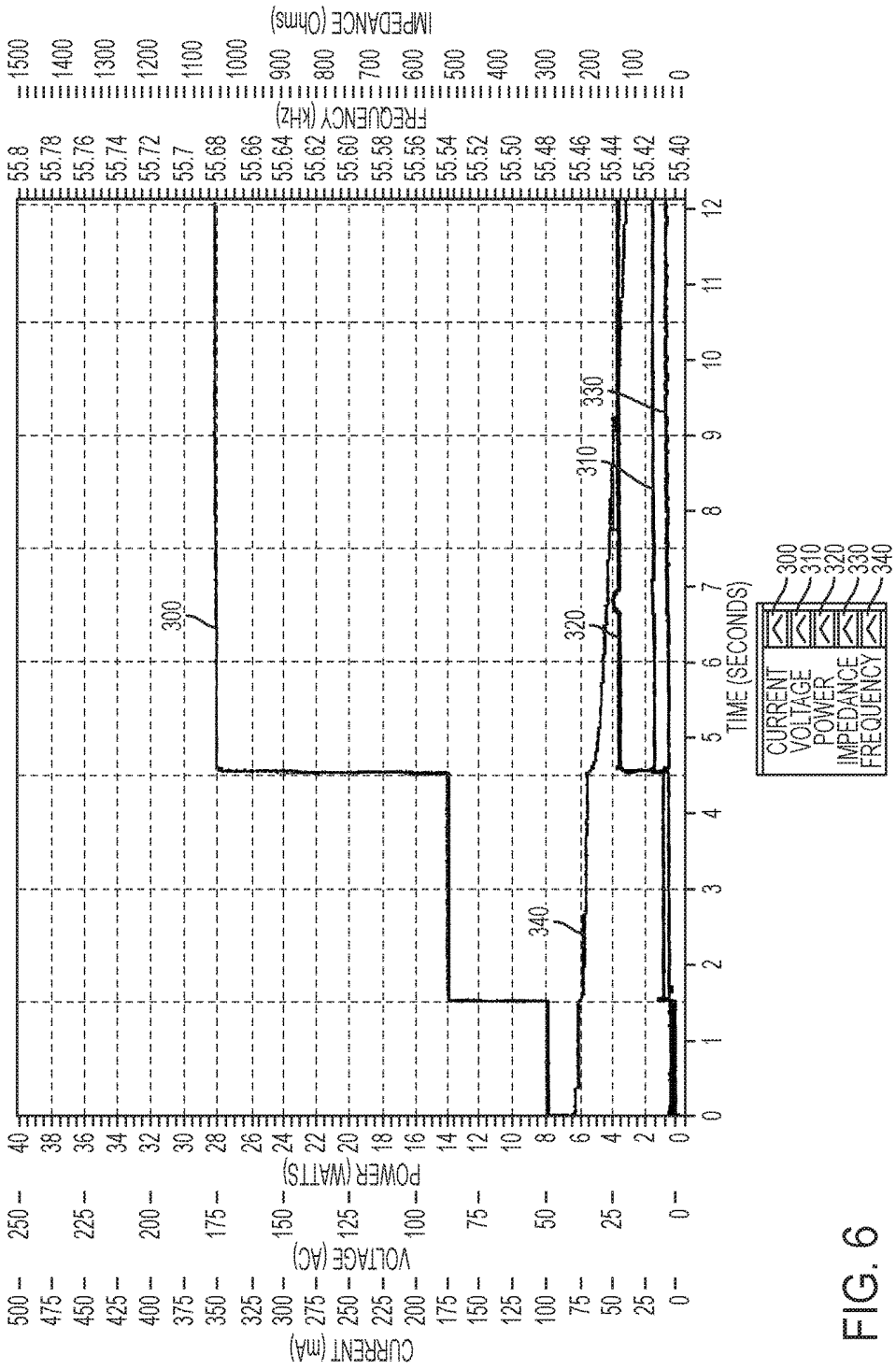
CURRENT (mA)
VOLTAGE (AC)
POWER (WATTS)
FREQUENCY (KHz)
IMPEDANCE (Ohms)
TIME (SECONDS)
CURRENT
VOLTAGE
POWER
IMPEDANCE
FREQUENCY
300
310
320
330
340

FIG. 6

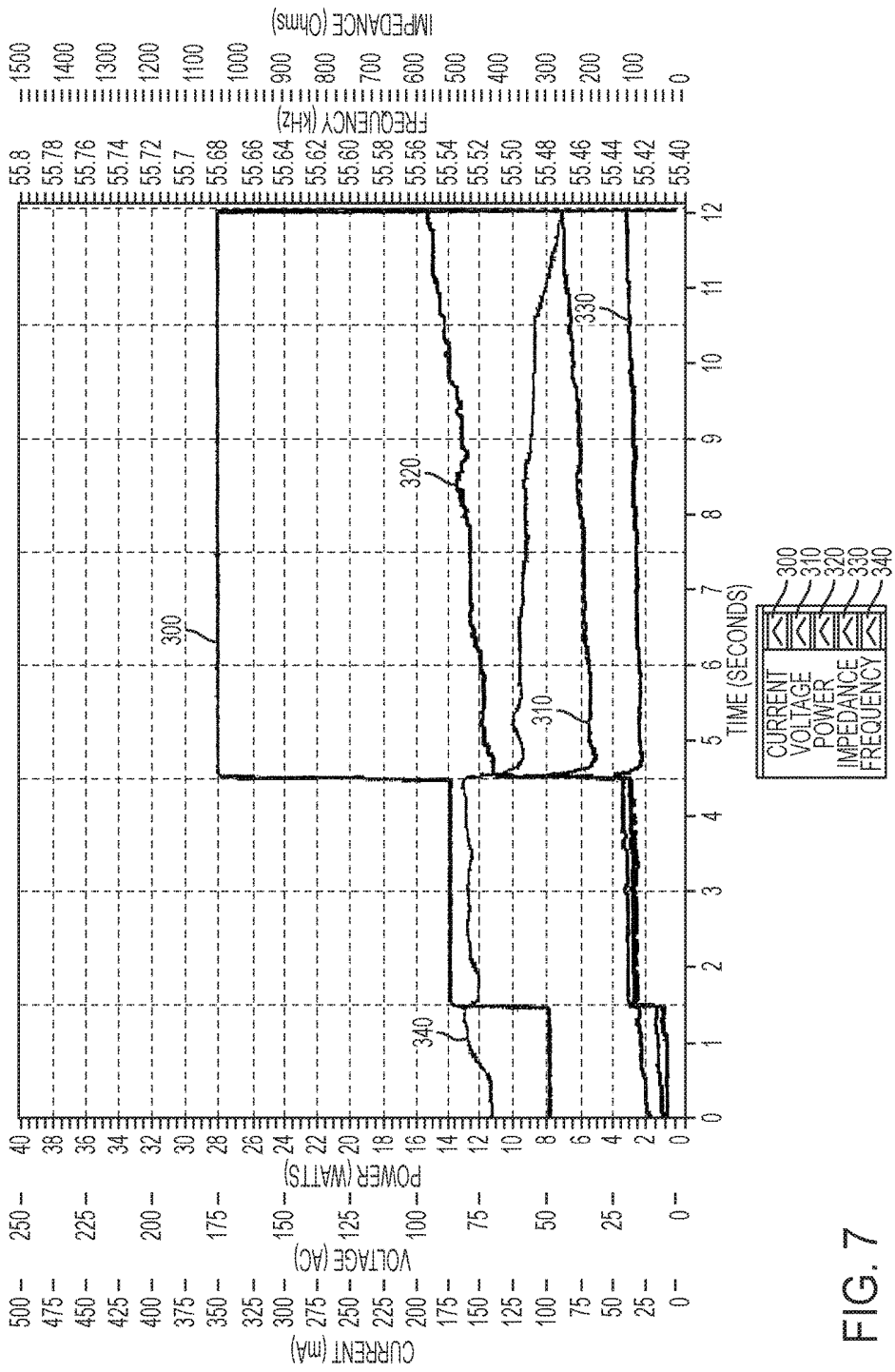
CURRENT (mA)
VOLTAGE (AC)
POWER (WATTS)
FREQUENCY (KHz)
IMPEDANCE (Ohms)
TIME (SECONDS)
CURRENT
VOLTAGE
POWER
IMPEDANCE
FREQUENCY
300
310
320
330
340

FIG. 7

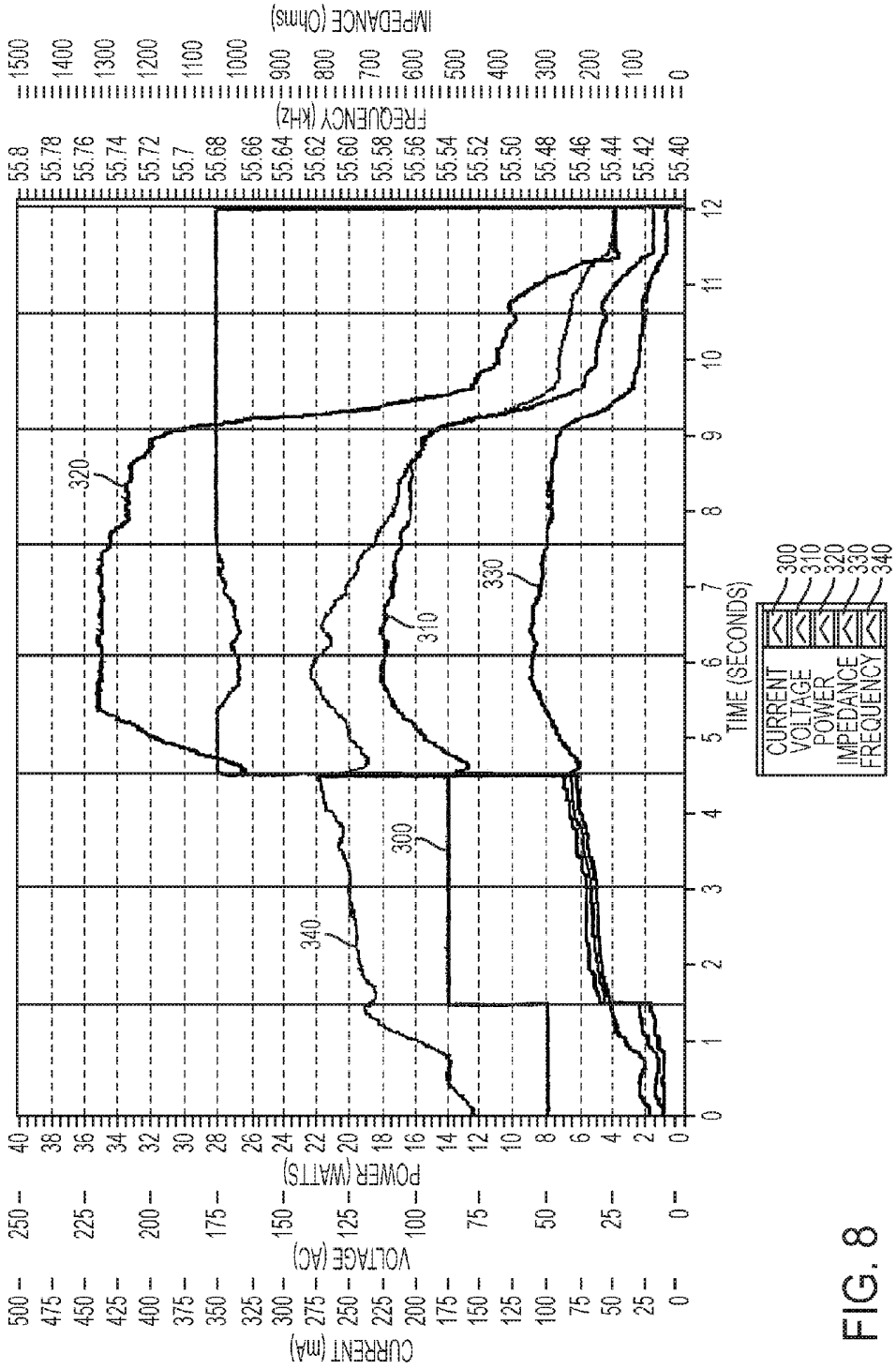
CURRENT (mA)
VOLTAGE (AC)
POWER (WATTS)
FREQUENCY (kHz)
IMPEDANCE (Ohms)
TIME (SECONDS)
CURRENT
VOLTAGE
POWER
IMPEDANCE
FREQUENCY
300
310
320
330
340

FIG. 8

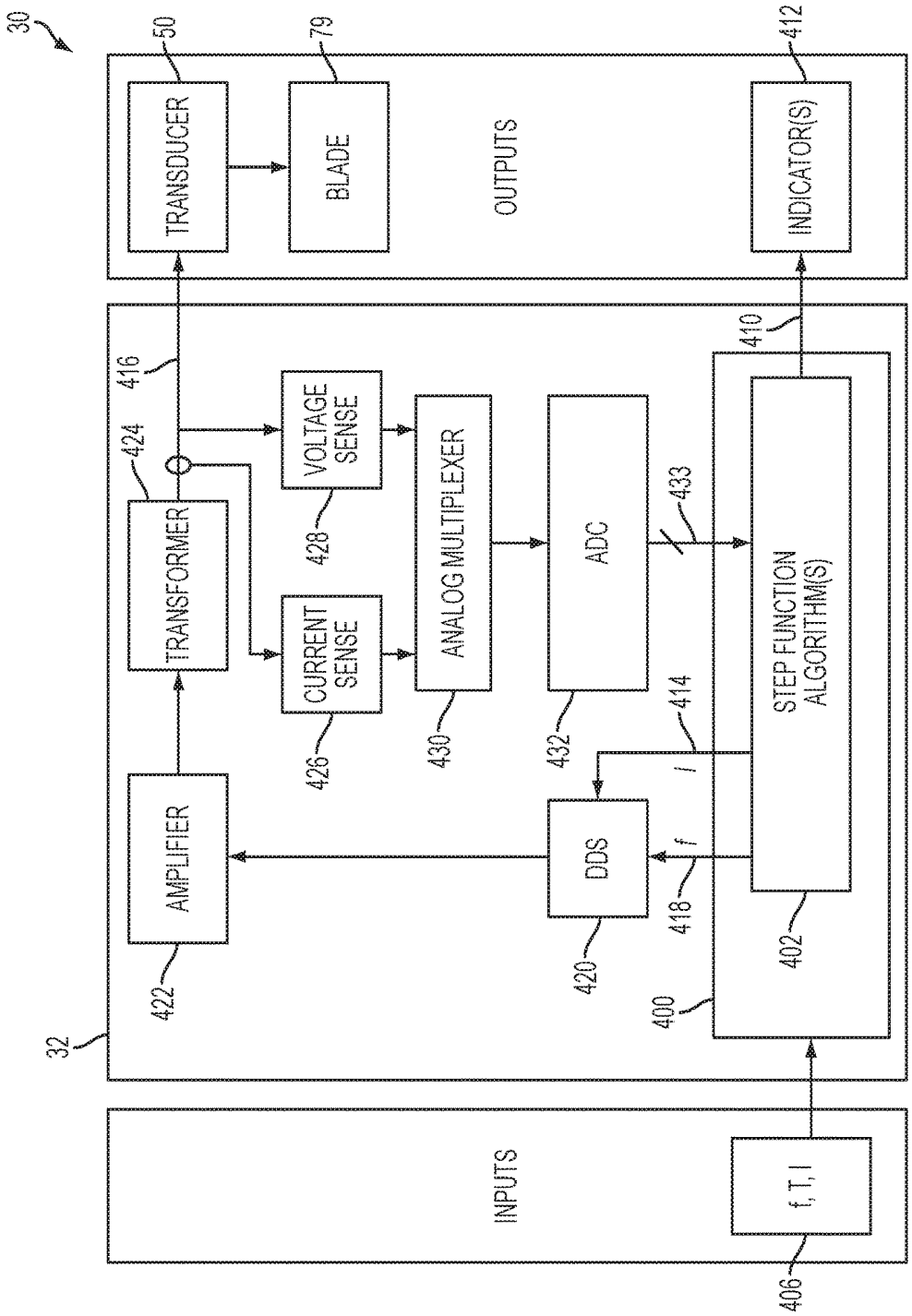
30
50
TRANSDUCER
79
BLADE
OUTPUTS
412
INDICATOR(S)
410
416
424
TRANSFORMER
VOLTAGE SENSE
428
CURRENT SENSE
426
ANALOG MULTIPLEXER
430
ADC
432
433
414
STEP FUNCTION ALGORITHM(S)
402
AMPLIFIER
422
DDS
420
418
400
32
INPUTS
f, T, I
406

FIG. 9

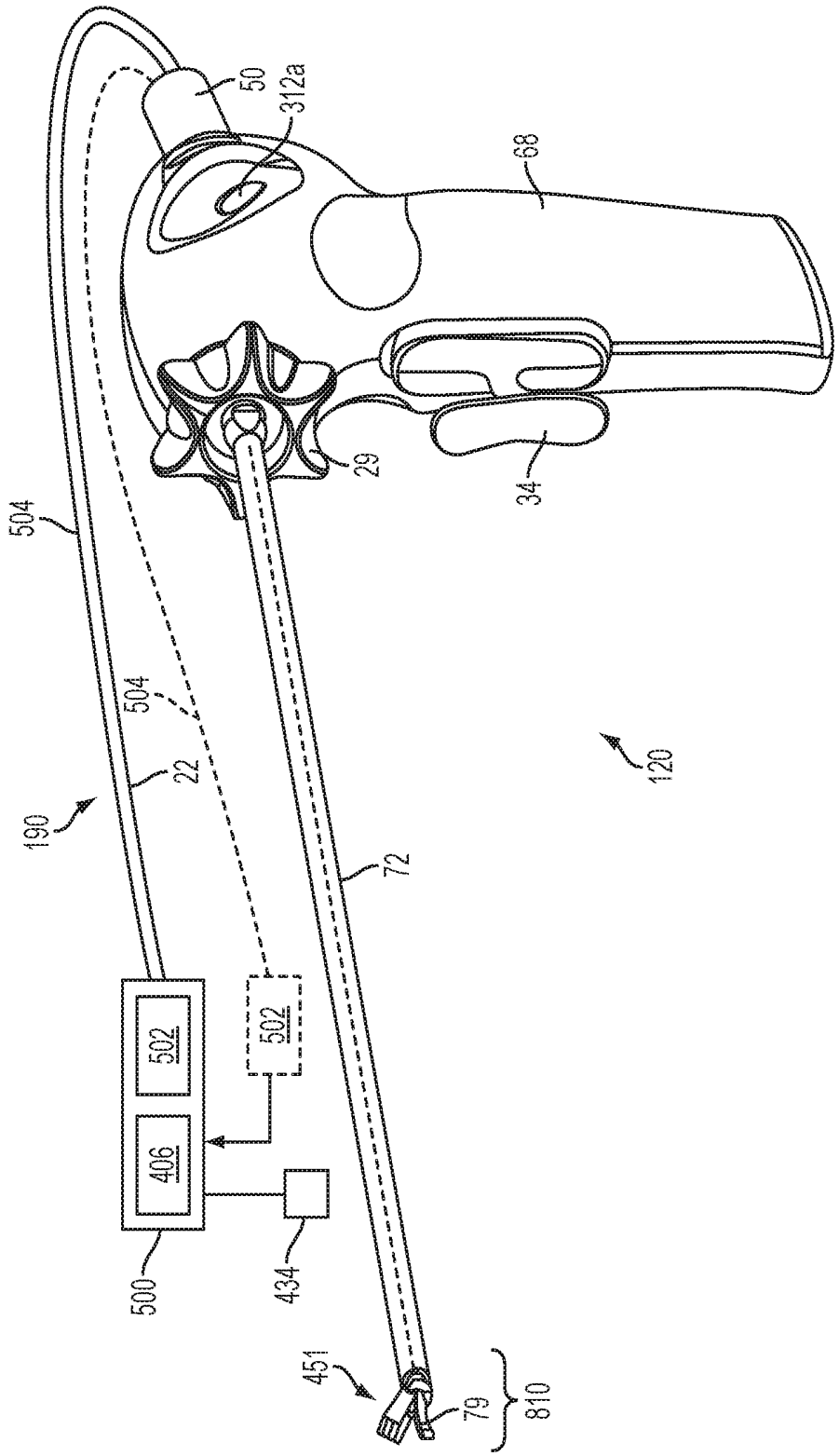
50
312a
68
29
34
504
504
22
190
72
120
502
406
502
500
434
451
79
810

FIG. 10

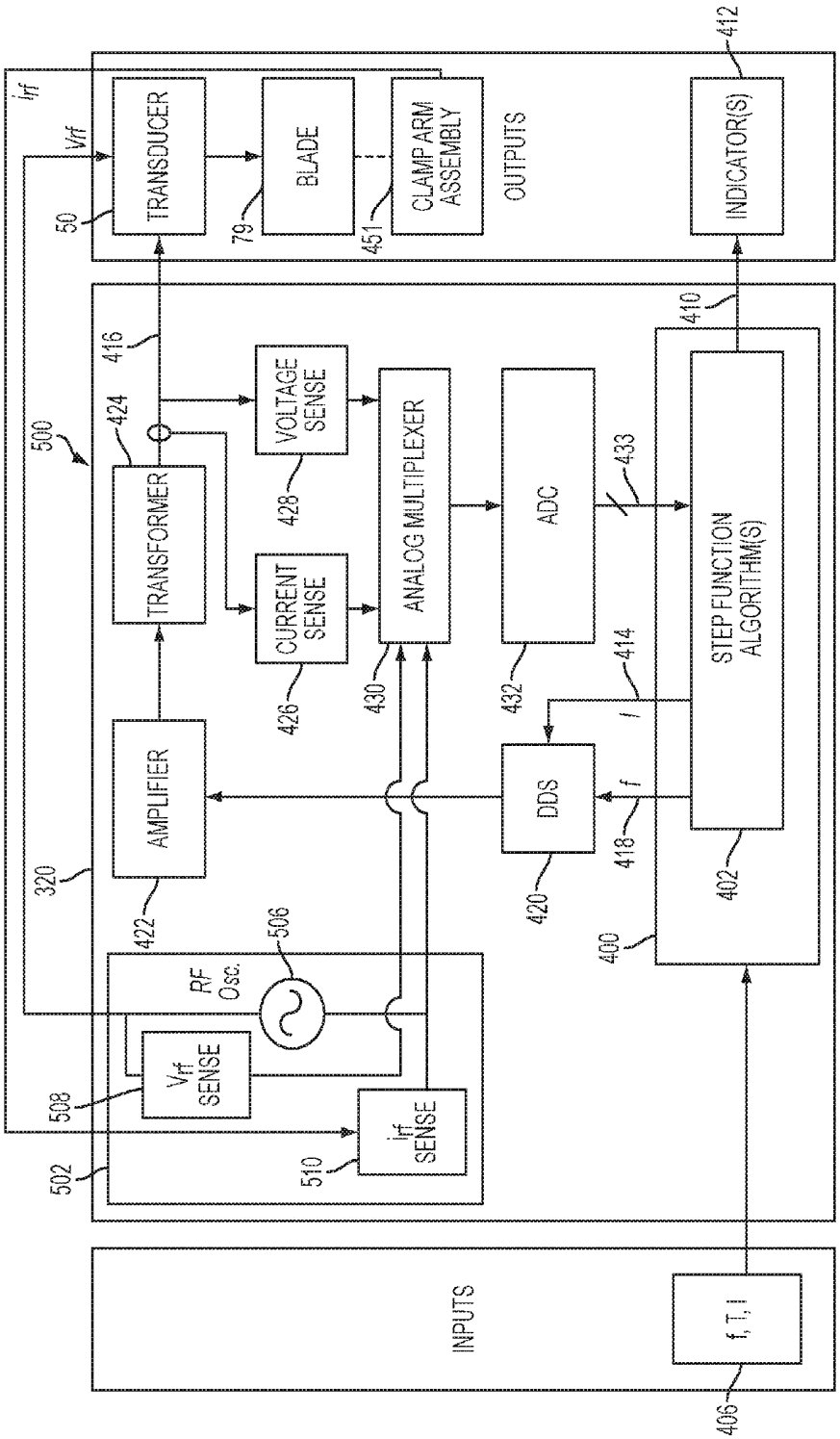
OUTPUTS
TRANSDUCER
BLADE
CLAMP ARM ASSEMBLY
INDICATOR(S)
VOLTAGE SENSE
CURRENT SENSE
TRANSFORMER
ANALOG MULTIPLEXER
ADC
STEP FUNCTION ALGORITHM(S)
AMPLIFIER
DDS
RF Osc.
Vrf SENSE
Irf SENSE
INPUTS
f, T, I
50
79
451
412
416
424
500
428
426
430
432
433
410
414
420
418
400
402
320
422
506
508
502
510
406

FIG. 11

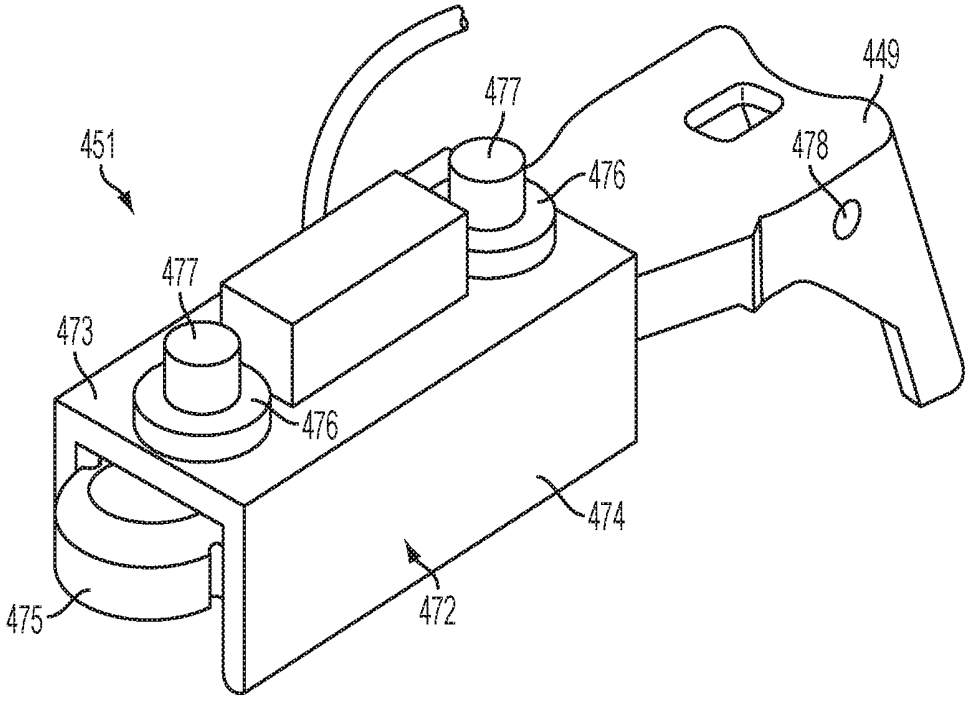


FIG. 12

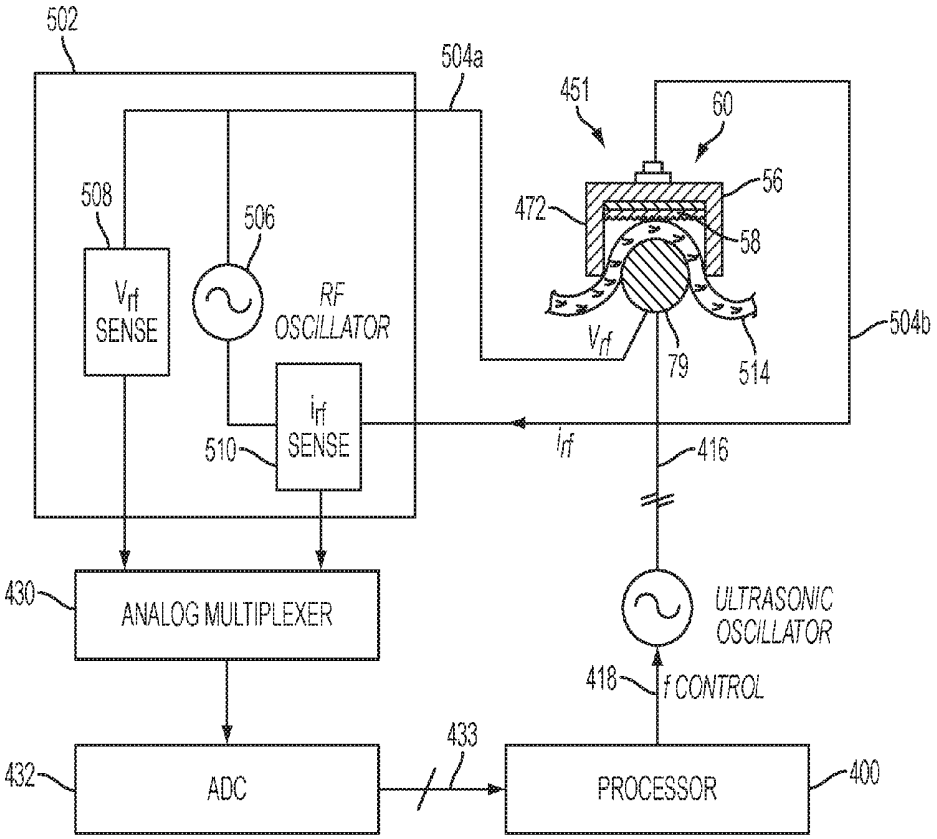
502
504a
451
60
56
472
58
508
506
$V_{rf}$ SENSE
RF OSCILLATOR
$V_{rf}$
79
514
504b
$i_{rf}$ SENSE
510
$i_{rf}$
416
430
ANALOG MULTIPLEXER
ULTRASONIC OSCILLATOR
418
f CONTROL
433
432
ADC
PROCESSOR
400

FIG. 13

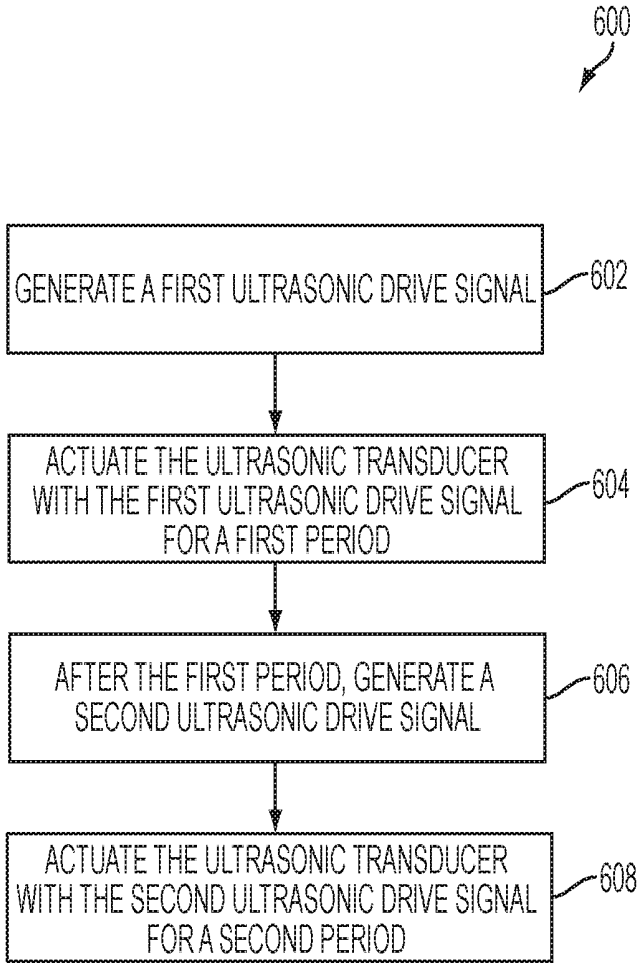
600
GENERATE A FIRST ULTRASONIC DRIVE SIGNAL
602
ACTUATE THE ULTRASONIC TRANSDUCER WITH THE FIRST ULTRASONIC DRIVE SIGNAL FOR A FIRST PERIOD
604
AFTER THE FIRST PERIOD, GENERATE A SECOND ULTRASONIC DRIVE SIGNAL
606
ACTUATE THE ULTRASONIC TRANSDUCER WITH THE SECOND ULTRASONIC DRIVE SIGNAL FOR A SECOND PERIOD
608

FIG. 14

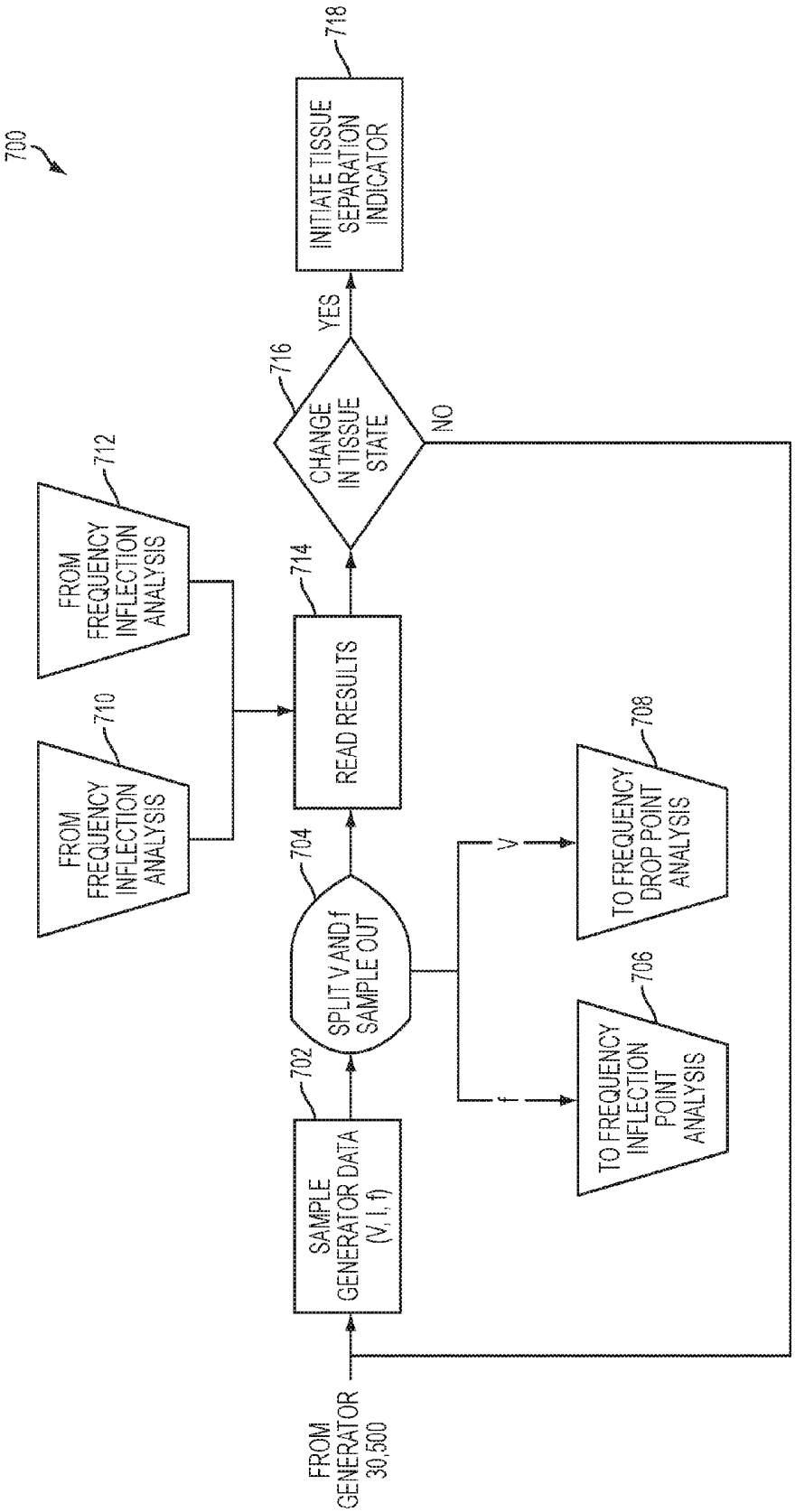
700
FROM GENERATOR 30,500
SAMPLE GENERATOR DATA (V, I, f)
702
SPLIT V AND f SAMPLE OUT
704
V
f
TO FREQUENCY INFLECTION POINT ANALYSIS
706
TO FREQUENCY DROP POINT ANALYSIS
708
READ RESULTS
714
FROM FREQUENCY INFLECTION ANALYSIS
710
FROM FREQUENCY INFLECTION ANALYSIS
712
CHANGE IN TISSUE STATE
716
YES
NO
INITIATE TISSUE SEPARATION INDICATOR
718

FIG. 15A

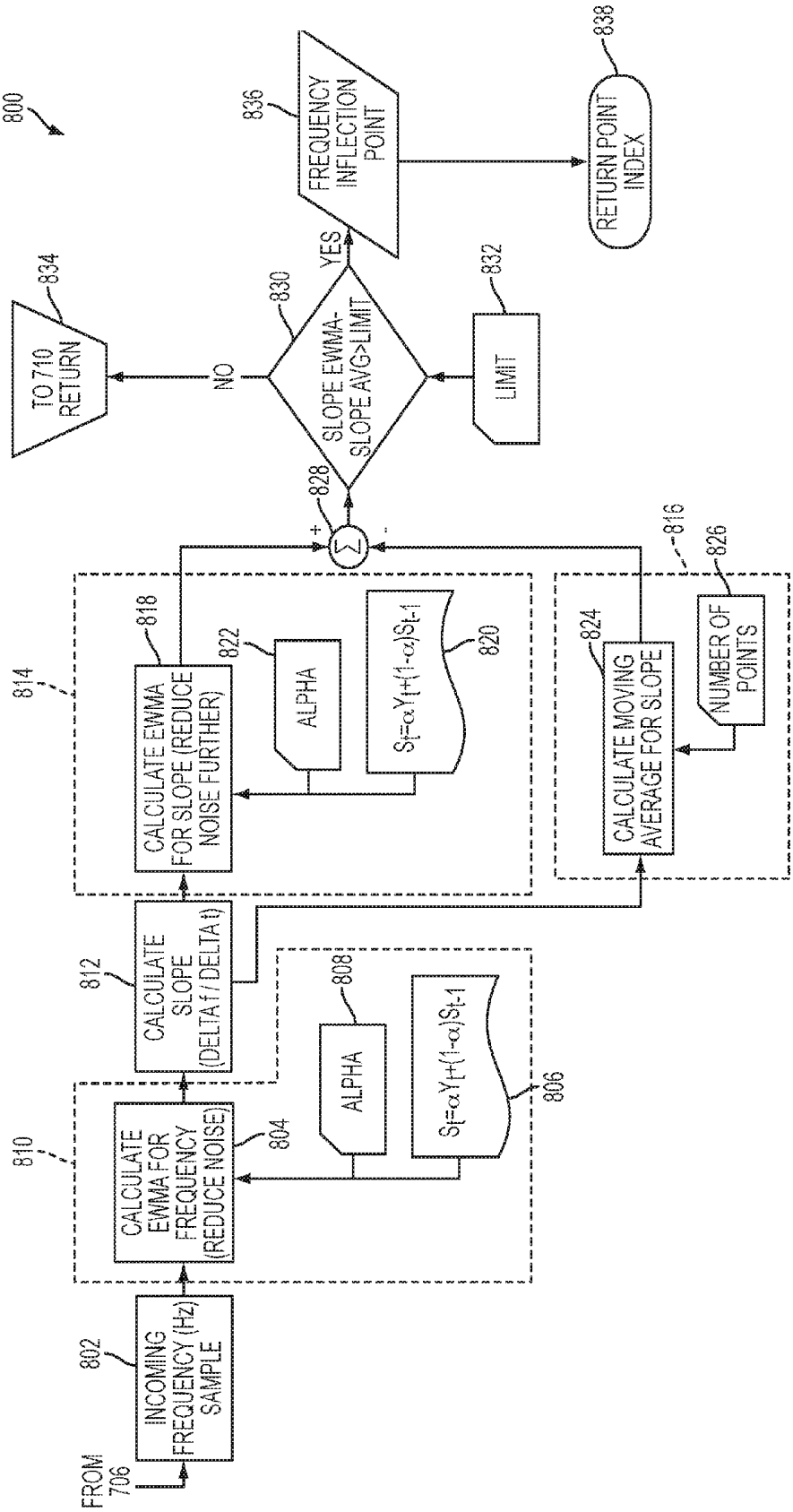
800
FROM 706
802
INCOMING FREQUENCY (Hz) SAMPLE
804
CALCULATE EWMA FOR FREQUENCY (REDUCE NOISE)
806
$S_t=\alpha Y_{t+}(1-\alpha)S_{t-1}$
808
ALPHA
810
812
CALCULATE SLOPE (DELTA f / DELTA t)
814
818
CALCULATE EWMA FOR SLOPE (REDUCE NOISE FURTHER)
820
$S_t=\alpha Y_{t+}(1-\alpha)S_{t-1}$
822
ALPHA
816
824
CALCULATE MOVING AVERAGE FOR SLOPE
826
NUMBER OF POINTS
828
+
Σ
-
830
SLOPE EWMA-SLOPE AVG>LIMIT
832
LIMIT
NO
YES
834
TO 710 RETURN
836
FREQUENCY INFLECTION POINT
838
RETURN POINT INDEX

FIG. 15B

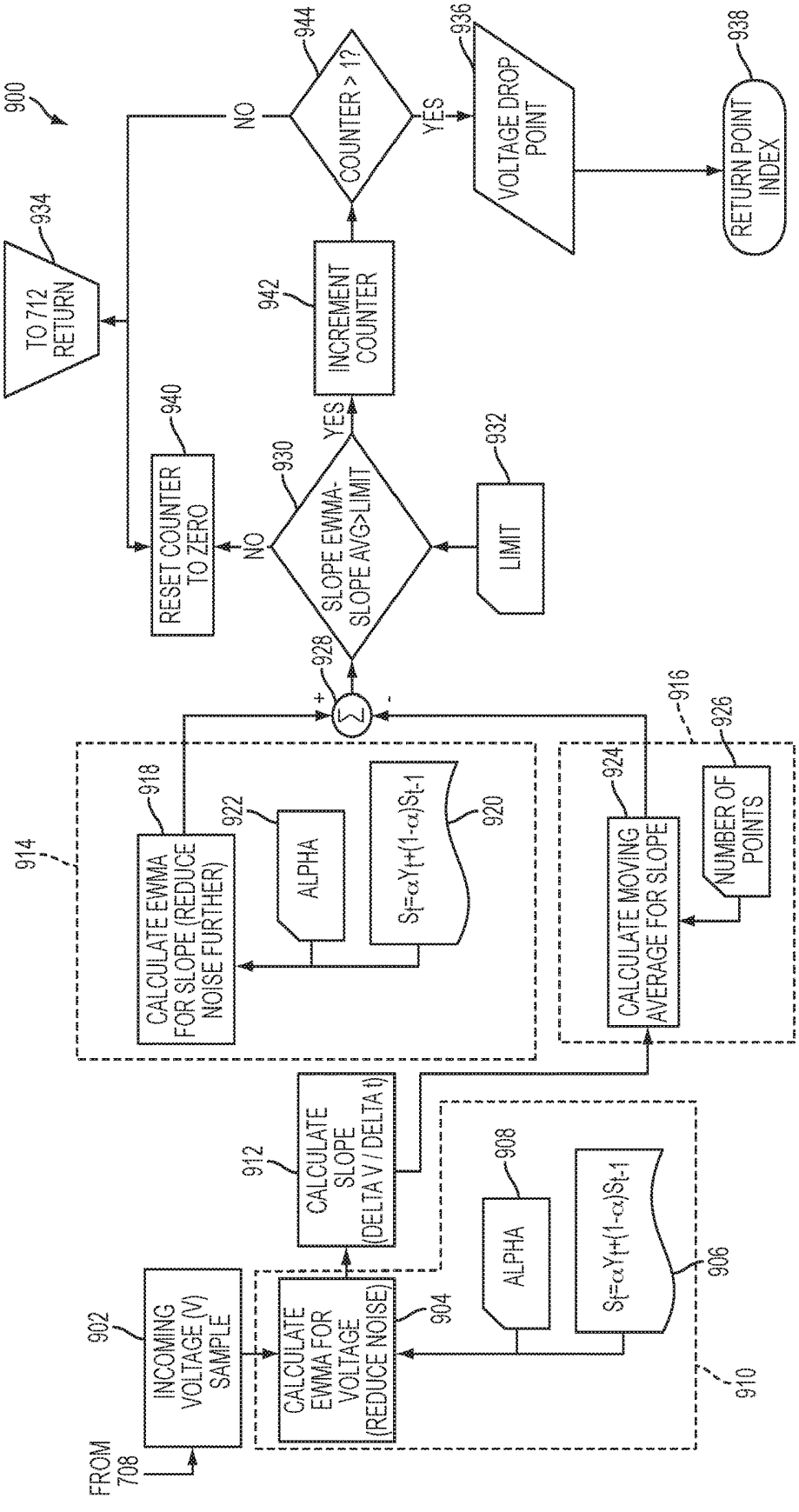
900
FROM 708
902
INCOMING VOLTAGE (V) SAMPLE
904
CALCULATE EWMA FOR VOLTAGE (REDUCE NOISE)
906
St=αYt+(1-α)St-1
908
ALPHA
910
912
CALCULATE SLOPE (DELTA V / DELTA t)
914
916
918
CALCULATE EWMA FOR SLOPE (REDUCE NOISE FURTHER)
920
St=αYt+(1-α)St-1
922
ALPHA
924
CALCULATE MOVING AVERAGE FOR SLOPE
926
NUMBER OF POINTS
928
+
Σ
-
930
SLOPE EWMA-SLOPE AVG>LIMIT
932
LIMIT
NO
YES
940
RESET COUNTER TO ZERO
942
INCREMENT COUNTER
944
COUNTER > 12
NO
YES
934
TO 712 RETURN
936
VOLTAGE DROP POINT
938
RETURN POINT INDEX

FIG. 15C

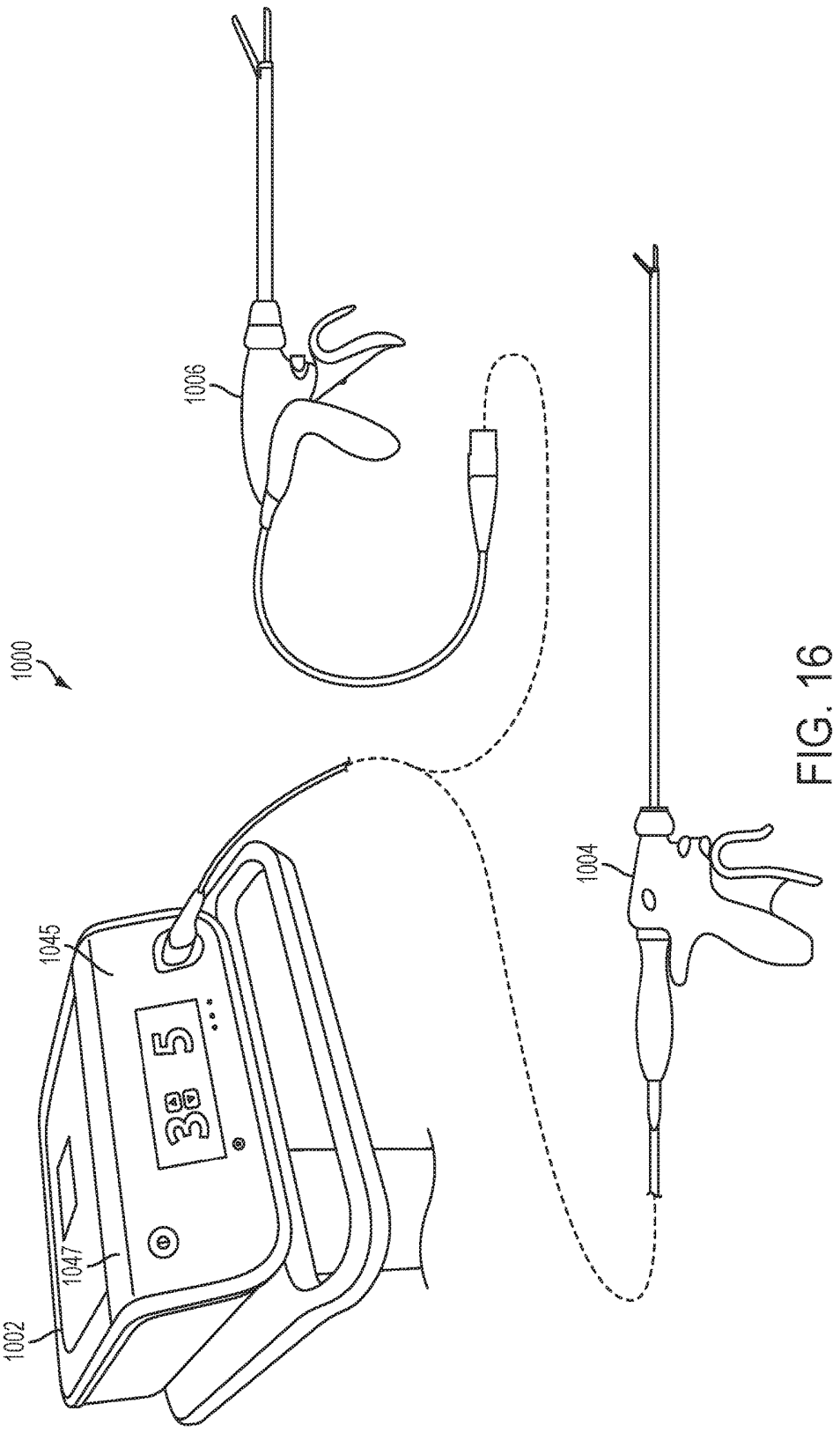


FIG. 16

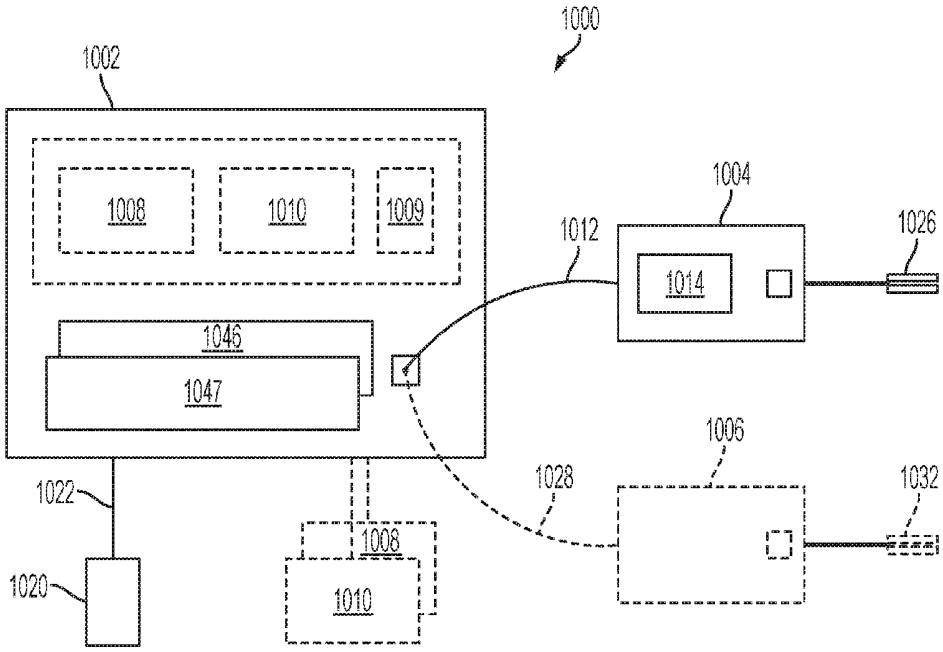
1000
1002
1008
1010
1009
1004
1012
1026
1014
1046
1047
1006
1028
1032
1022
1008
1020
1010

FIG. 17

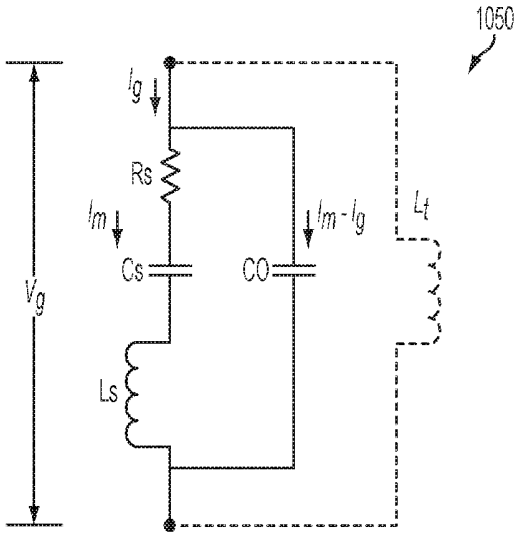
1050
Ig
Rs
Im
Cs
Im - Ig
CO
Lt
Vg
Ls

FIG. 18

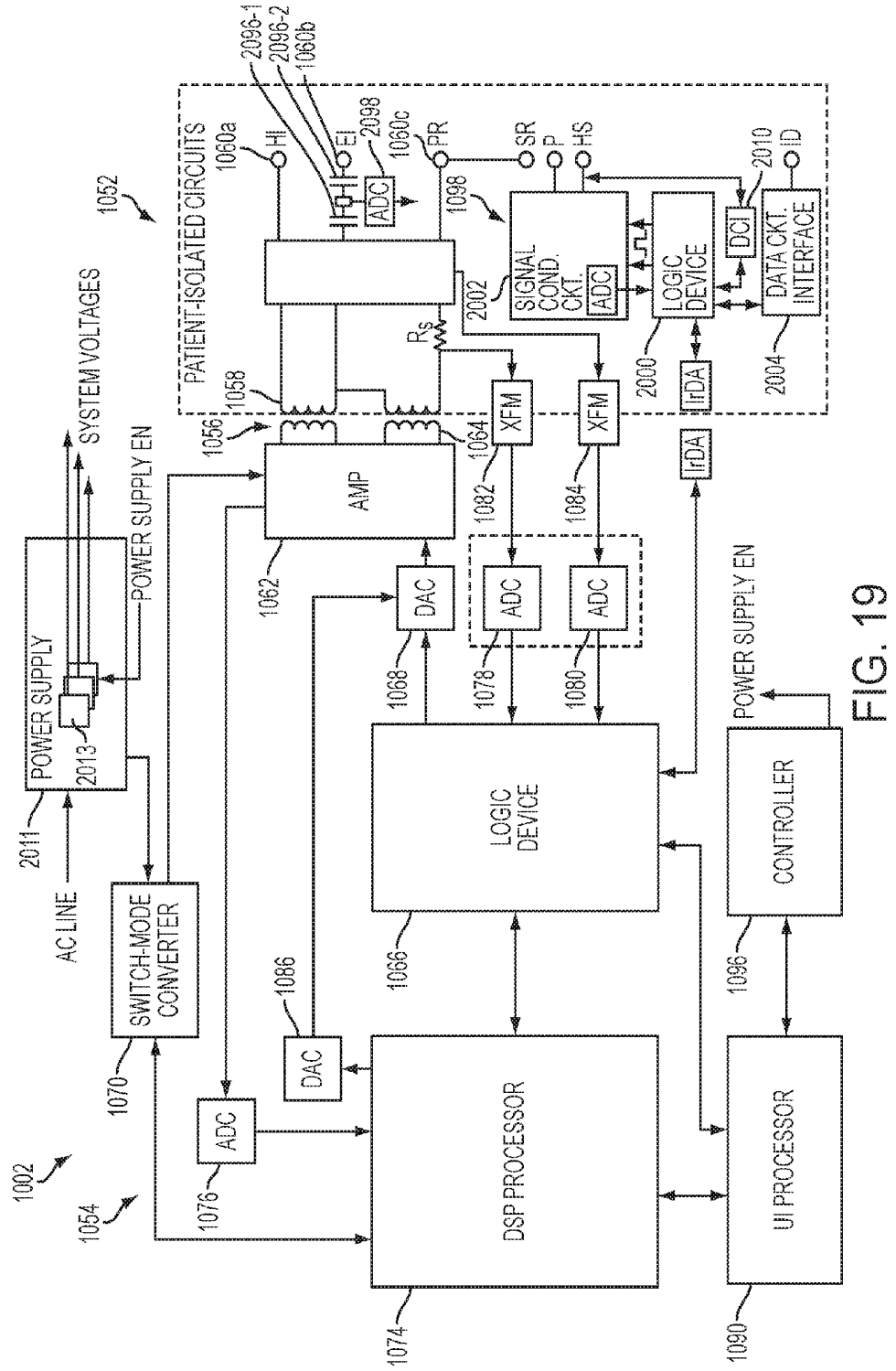
1002
1054
1052
PATIENT-ISOLATED CIRCUITS
1060a
HI
EI
2096-1
2096-2
1060b
2098
ADC
1060c
PR
SR
P
HS
1098
SIGNAL COND. CKT.
ADC
2002
LOGIC DEVICE
2000
DCI
2010
ID
DATA CKT. INTERFACE
2004
IrDA
IrDA
$R_S$
1058
1056
1064
XFM
XFM
1082
1084
AMP
1062
DAC
1068
ADC
1078
ADC
1080
LOGIC DEVICE
1066
CONTROLLER
1096
POWER SUPPLY EN
POWER SUPPLY
2013
2011
SYSTEM VOLTAGES
POWER SUPPLY EN
AC LINE
SWITCH-MODE CONVERTER
1070
DAC
1086
ADC
1076
DSP PROCESSOR
1074
UI PROCESSOR
1090

FIG. 19

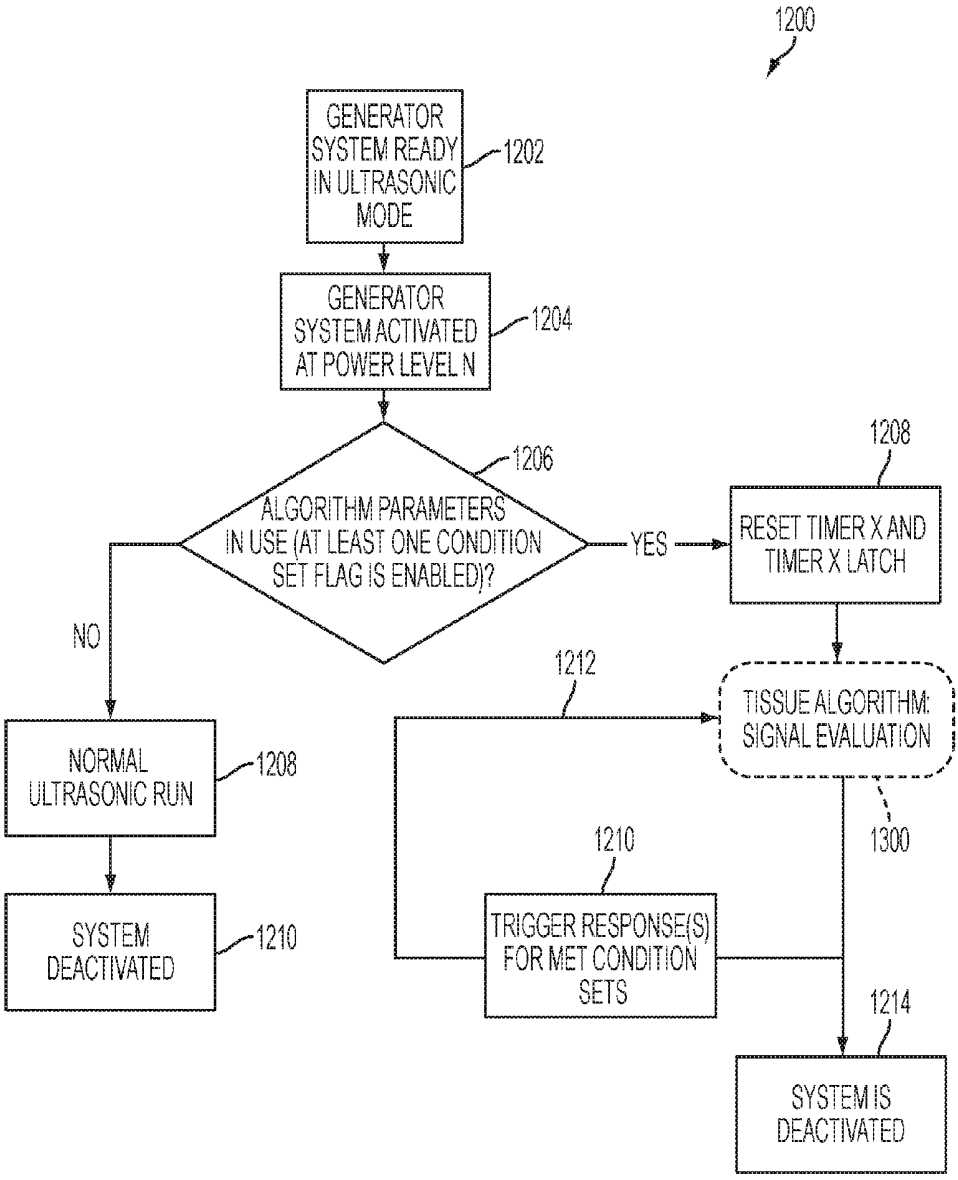
1200
GENERATOR SYSTEM READY IN ULTRASONIC MODE
1202
GENERATOR SYSTEM ACTIVATED AT POWER LEVEL N
1204
ALGORITHM PARAMETERS IN USE (AT LEAST ONE CONDITION SET FLAG IS ENABLED)?
1206
YES
NO
1208
RESET TIMER X AND TIMER X LATCH
1212
TISSUE ALGORITHM: SIGNAL EVALUATION
1300
NORMAL ULTRASONIC RUN
1208
SYSTEM DEACTIVATED
1210
1210
TRIGGER RESPONSE(S) FOR MET CONDITION SETS
1214
SYSTEM IS DEACTIVATED

FIG. 20

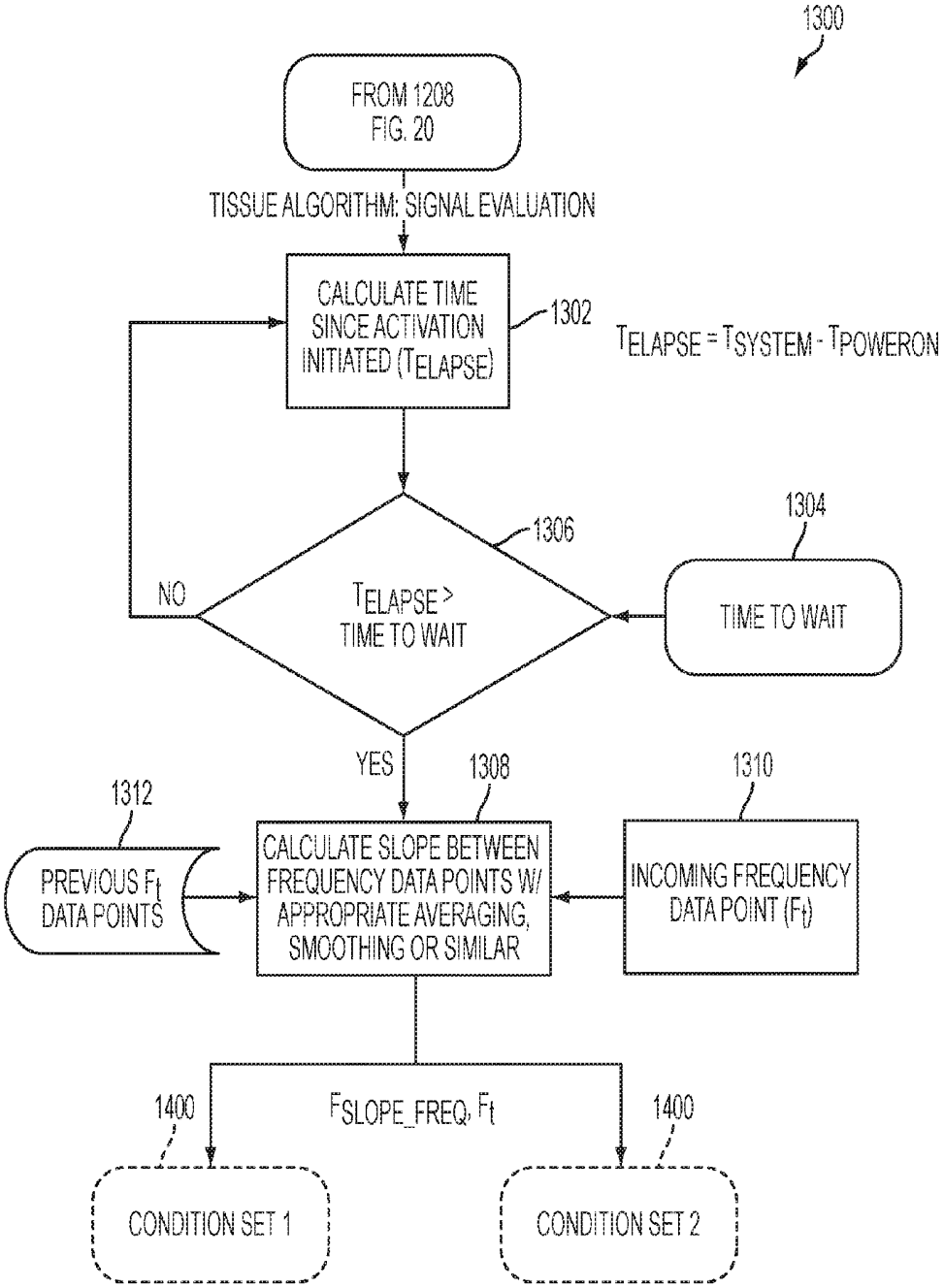
1300
FROM 1208
FIG. 20
TISSUE ALGORITHM: SIGNAL EVALUATION
CALCULATE TIME SINCE ACTIVATION INITIATED ($T_{ELAPSE}$)
1302
$T_{ELAPSE} = T_{SYSTEM} - T_{POWERON}$
1304
1306
NO
$T_{ELAPSE}$ > TIME TO WAIT
TIME TO WAIT
YES
1308
1310
1312
PREVIOUS $F_t$ DATA POINTS
CALCULATE SLOPE BETWEEN FREQUENCY DATA POINTS W/ APPROPRIATE AVERAGING, SMOOTHING OR SIMILAR
INCOMING FREQUENCY DATA POINT ($F_t$)
1400
$F_{SLOPE\_FREQ}$, $F_t$
1400
CONDITION SET 1
CONDITION SET 2

FIG. 21

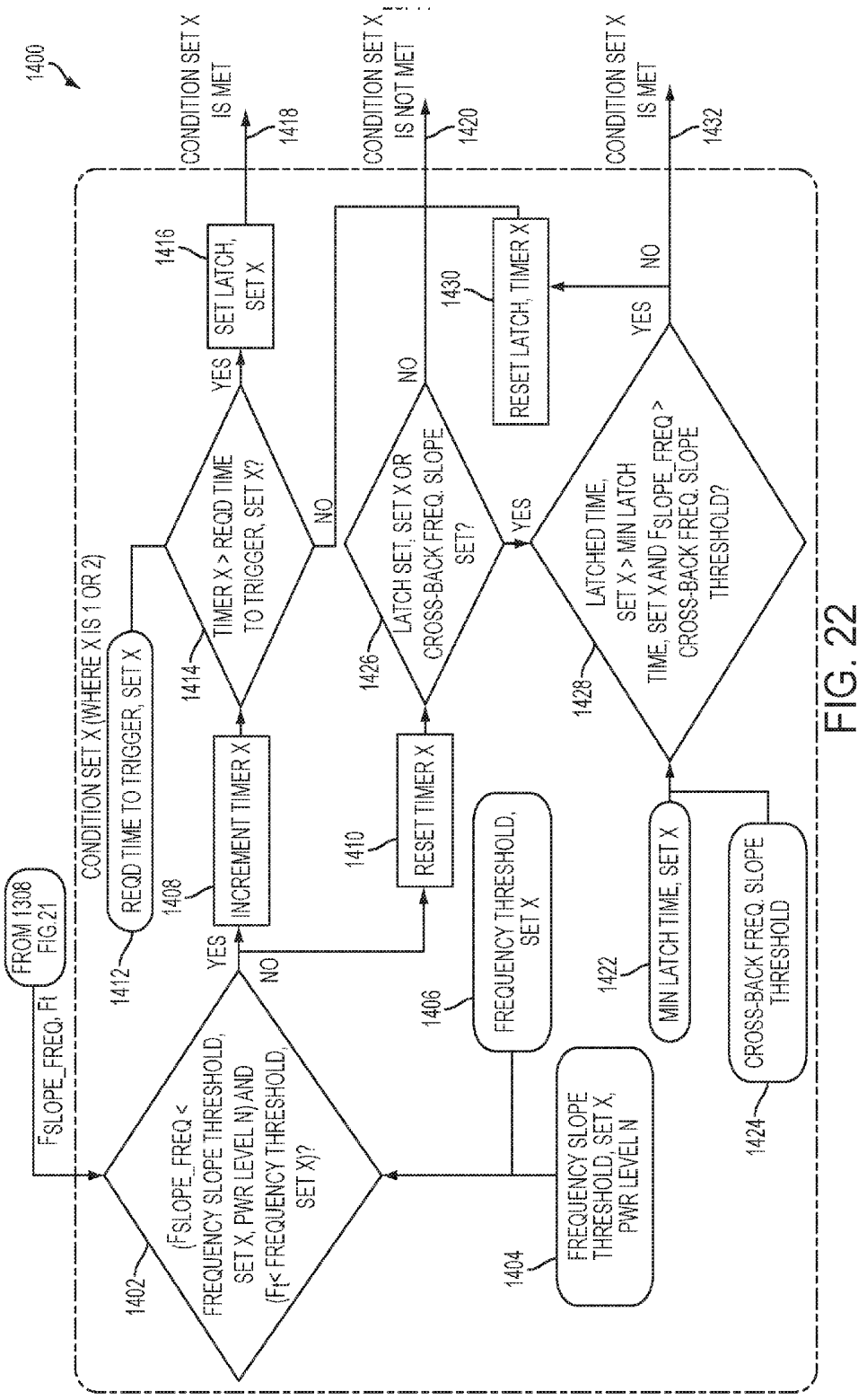
1400
CONDITION SET X (WHERE X IS 1 OR 2)
FROM 1308 FIG. 21
FSLOPE_FREQ, Ft
1402
(FSLOPE_FREQ < FREQUENCY SLOPE THRESHOLD, SET X, PWR LEVEL N) AND (Ft< FREQUENCY THRESHOLD, SET X)?
YES
NO
1404
FREQUENCY SLOPE THRESHOLD, SET X, PWR LEVEL N
1406
FREQUENCY THRESHOLD, SET X
1408
INCREMENT TIMER X
1410
RESET TIMER X
1412
REQD TIME TO TRIGGER, SET X
1414
TIMER X > REQD TIME TO TRIGGER, SET X?
YES
NO
1416
SET LATCH, SET X
1418
CONDITION SET X IS MET
1420
CONDITION SET X IS NOT MET
1422
MIN LATCH TIME, SET X
1424
CROSS-BACK FREQ. SLOPE THRESHOLD
1426
LATCH SET, SET X OR CROSS-BACK FREQ. SLOPE SET?
YES
NO
1428
LATCHED TIME, SET X > MIN LATCH TIME, SET X AND FSLOPE_FREQ > CROSS-BACK FREQ. SLOPE THRESHOLD?
YES
NO
1430
RESET LATCH, TIMER X
1432
CONDITION SET X IS MET

FIG. 22

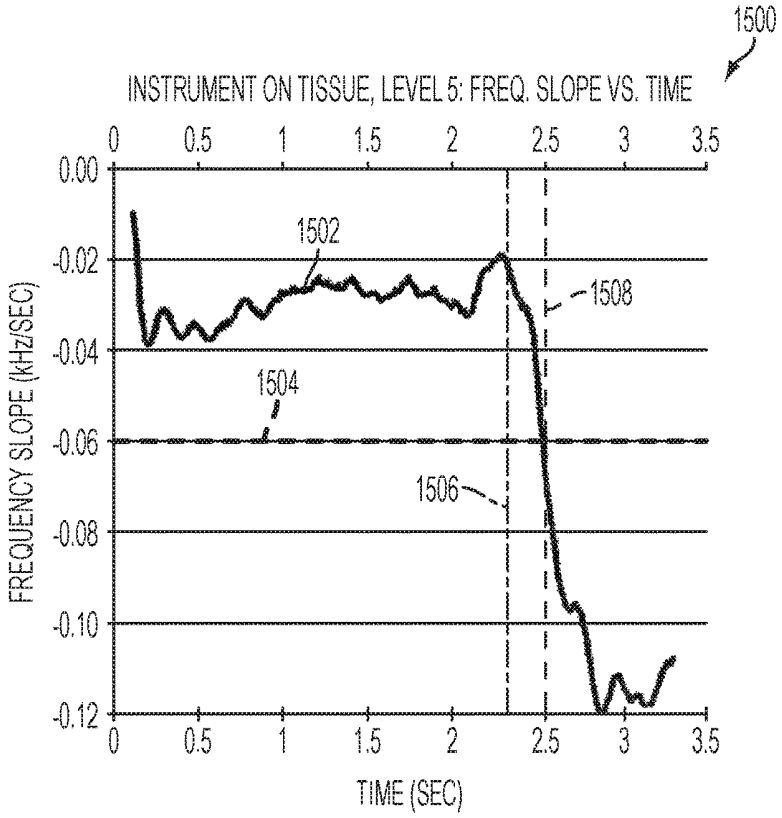


FIG. 23

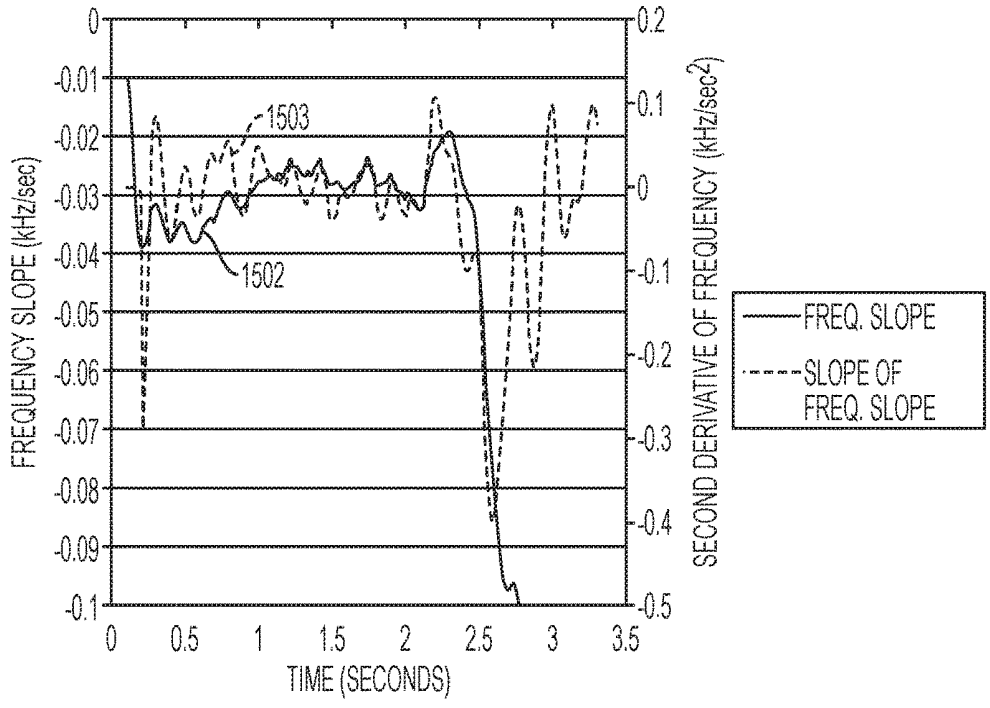


FIG. 23A

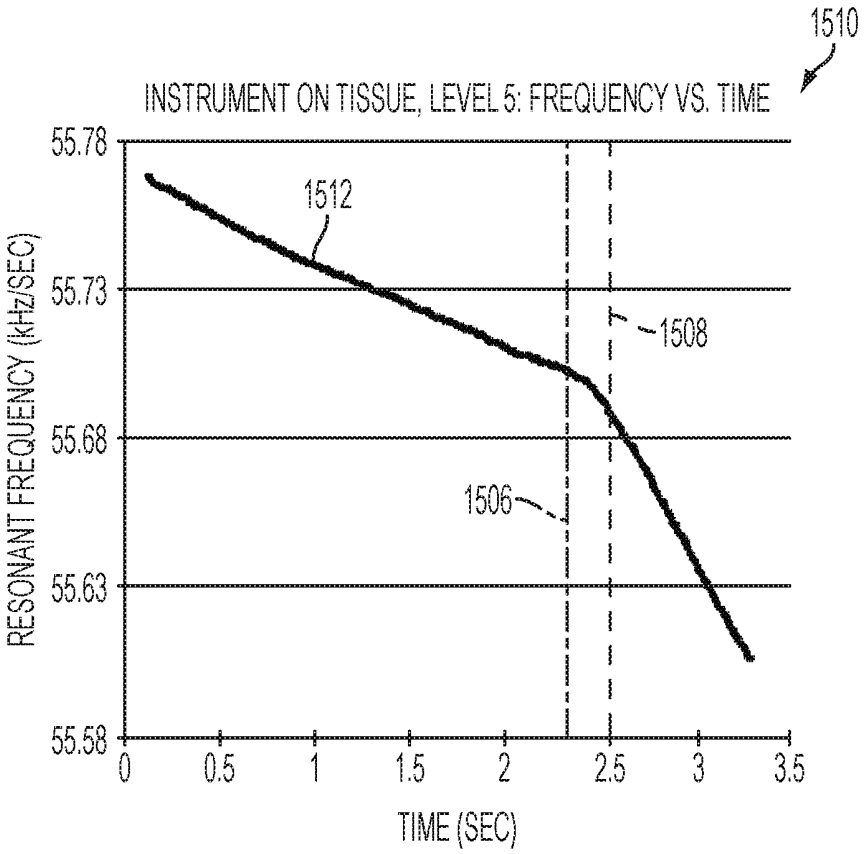
1510
INSTRUMENT ON TISSUE, LEVEL 5: FREQUENCY VS. TIME
RESONANT FREQUENCY (kHz/SEC)
55.78
55.73
55.68
55.63
55.58
1512
1508
1506
0
0.5
1
1.5
2
2.5
3
3.5
TIME (SEC)

FIG. 24

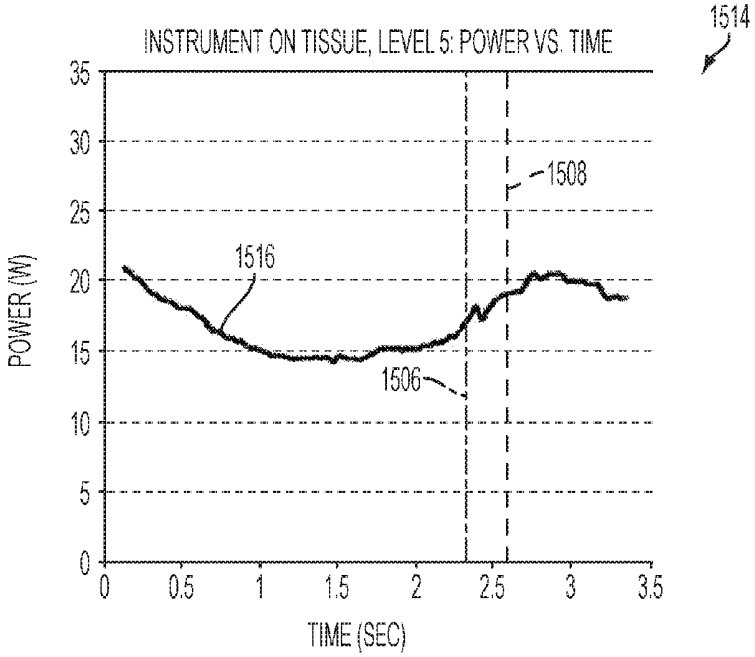
1514
INSTRUMENT ON TISSUE, LEVEL 5: POWER VS. TIME
POWER (W)
TIME (SEC)
1508
1516
1506
0
5
10
15
20
25
30
35
0
0.5
1
1.5
2
2.5
3
3.5

FIG. 25

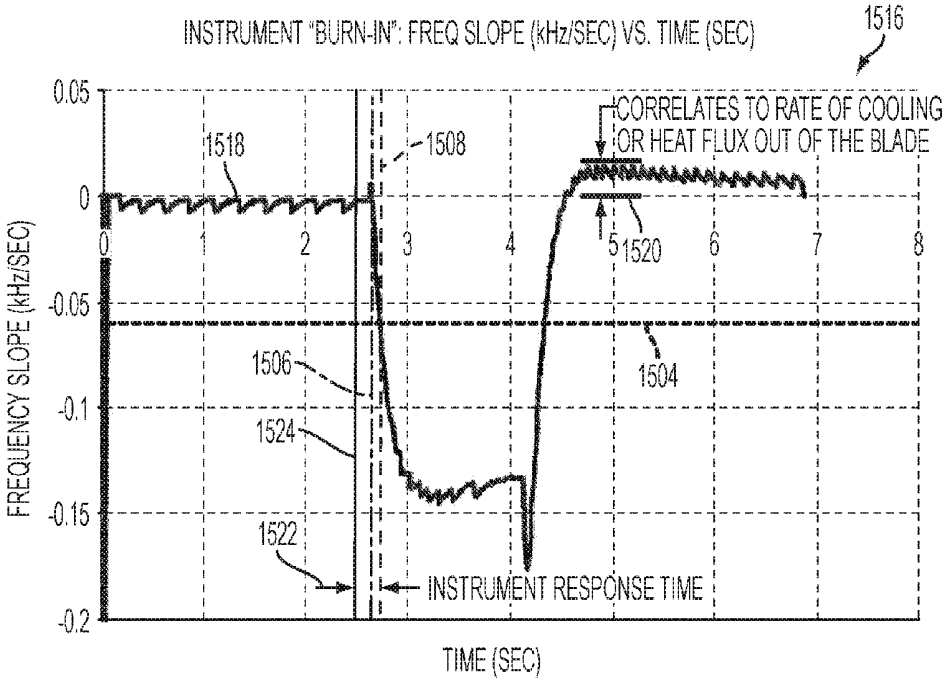
1516
INSTRUMENT "BURN-IN": FREQ SLOPE (kHz/SEC) VS. TIME (SEC)
FREQUENCY SLOPE (kHz/SEC)
TIME (SEC)
CORRELATES TO RATE OF COOLING
OR HEAT FLUX OUT OF THE BLADE
1518
1508
1520
1504
1506
1524
1522
INSTRUMENT RESPONSE TIME
0.05
0
-0.05
-0.1
-0.15
-0.2
0
1
2
3
4
5
6
7
8

FIG. 26

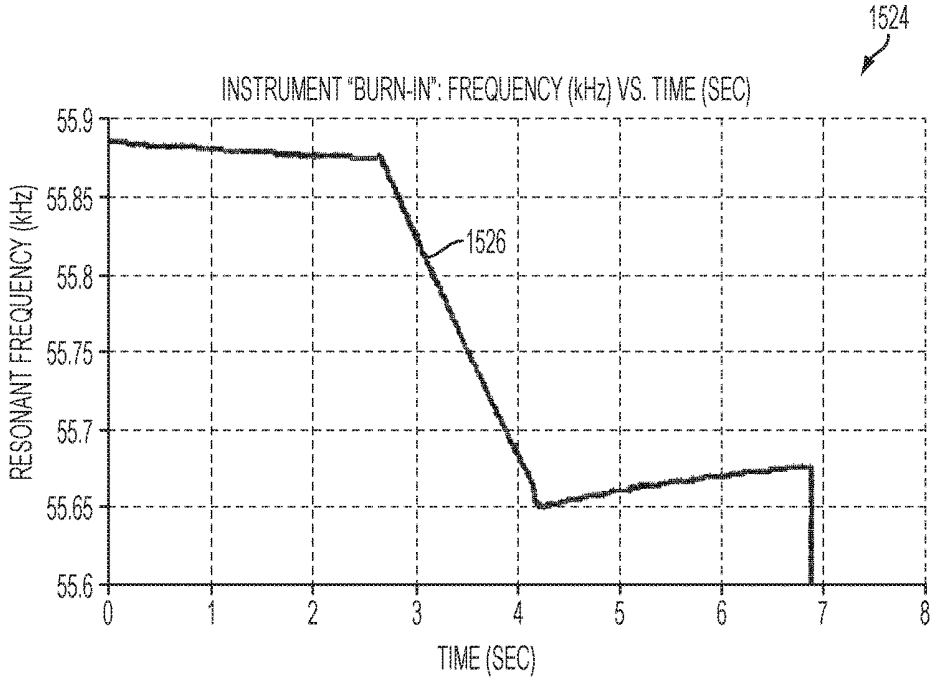
1524
INSTRUMENT "BURN-IN": FREQUENCY (kHz) VS. TIME (SEC)
RESONANT FREQUENCY (kHz)
55.9
55.85
55.8
55.75
55.7
55.65
55.6
1526
0
1
2
3
4
5
6
7
8
TIME (SEC)

FIG. 27

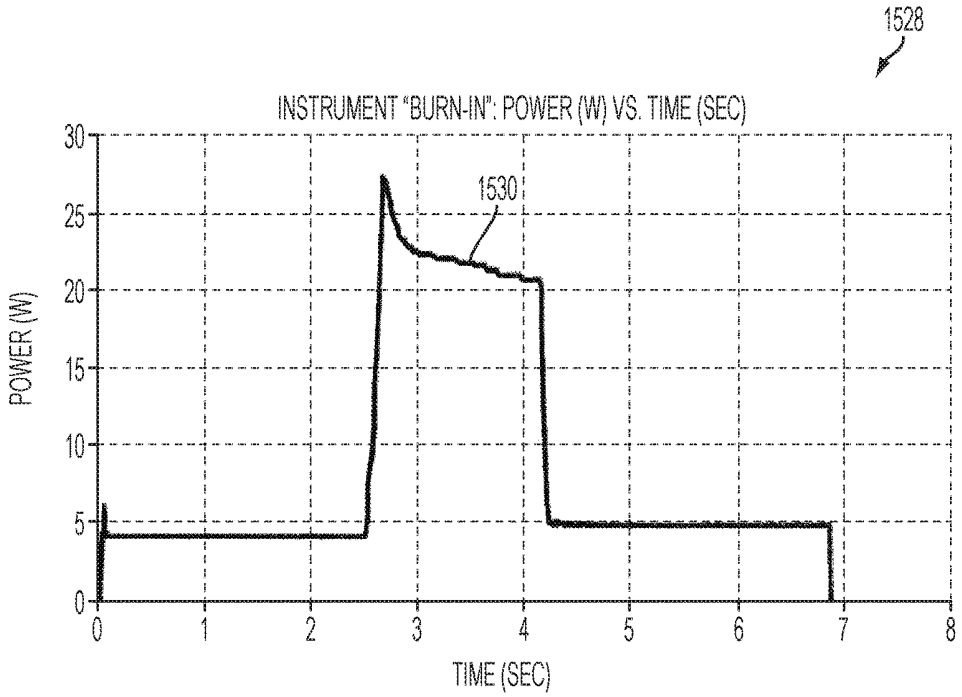
1528
INSTRUMENT "BURN-IN": POWER (W) VS. TIME (SEC)
POWER (W)
30
25
20
15
10
5
0
1530
0
1
2
3
4
5
6
7
8
TIME (SEC)

FIG. 28

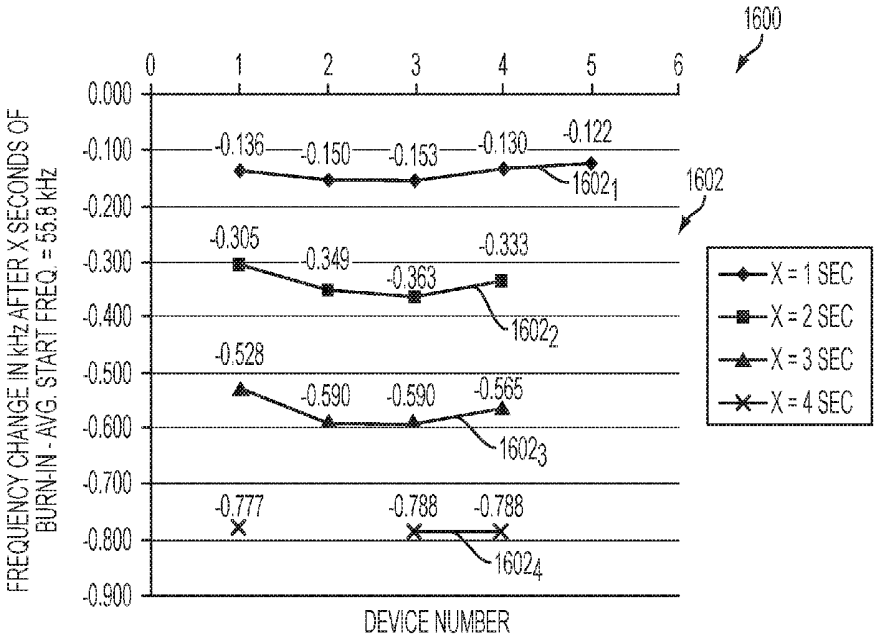
1600
FREQUENCY CHANGE IN kHz AFTER X SECONDS OF BURN-IN - AVG. START FREQ. = 55.8 kHz
DEVICE NUMBER
1602
X = 1 SEC
X = 2 SEC
X = 3 SEC
X = 4 SEC
-0.136
-0.150
-0.153
-0.130
-0.122
1602$_1$
-0.305
-0.349
-0.363
-0.333
1602$_2$
-0.528
-0.590
-0.590
-0.565
1602$_3$
-0.777
-0.788
-0.788
1602$_4$

FIG. 29

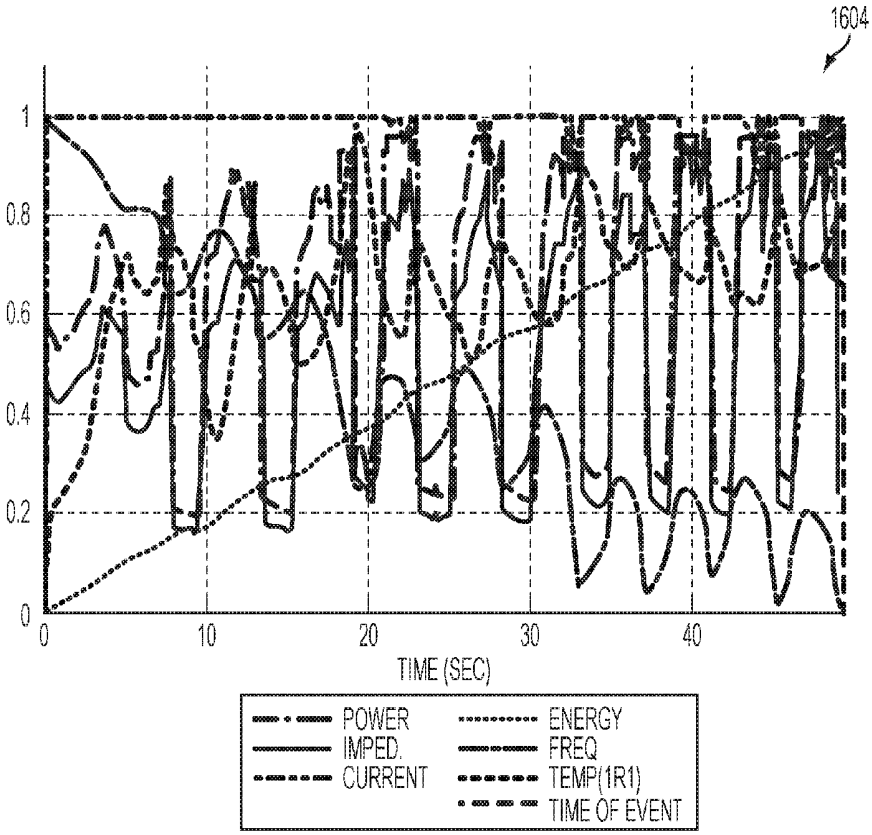
1604
TIME (SEC)
POWER
IMPED.
CURRENT
ENERGY
FREQ
TEMP(1R1)
TIME OF EVENT

FIG. 30

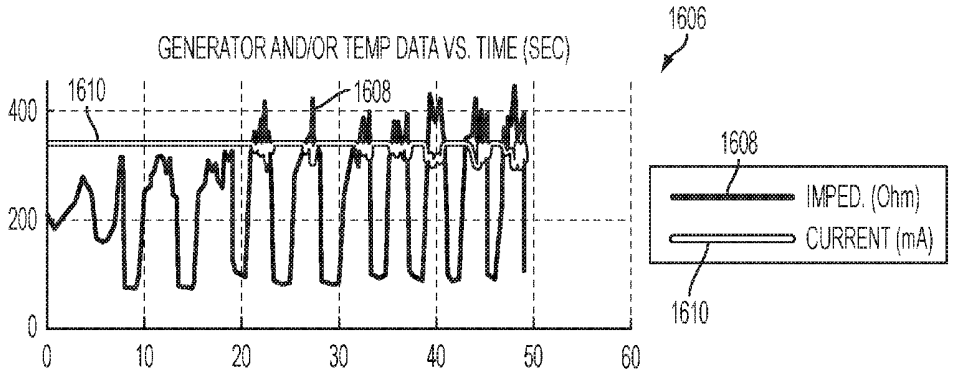


FIG. 31A

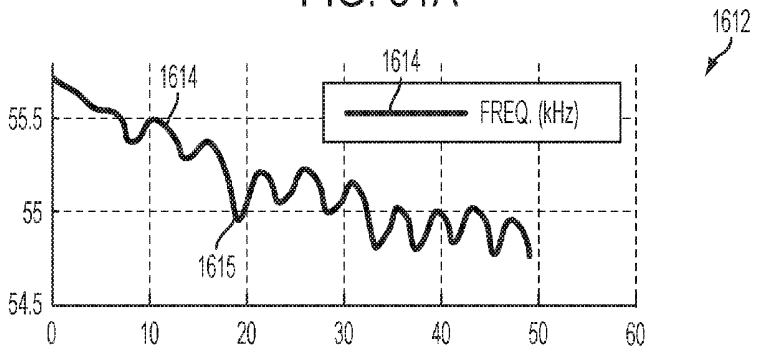


FIG. 31B

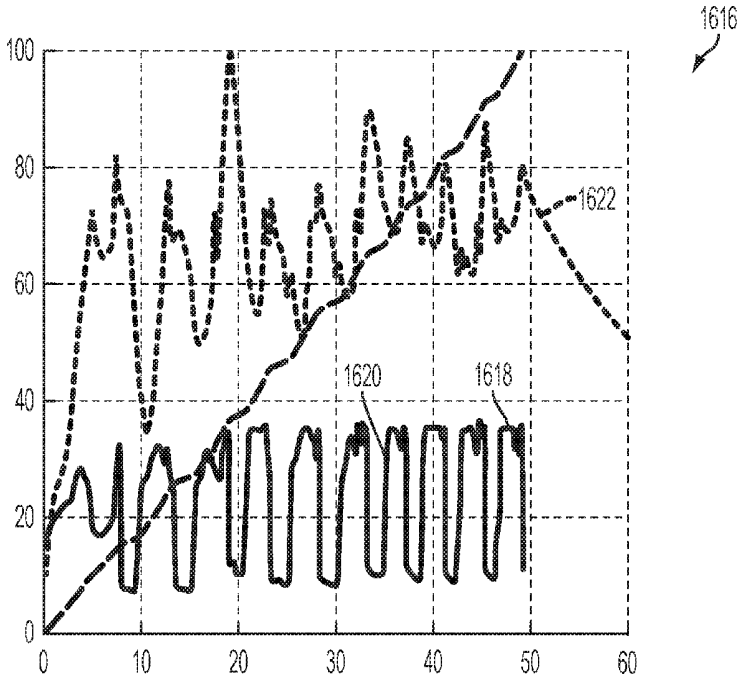


FIG. 31C

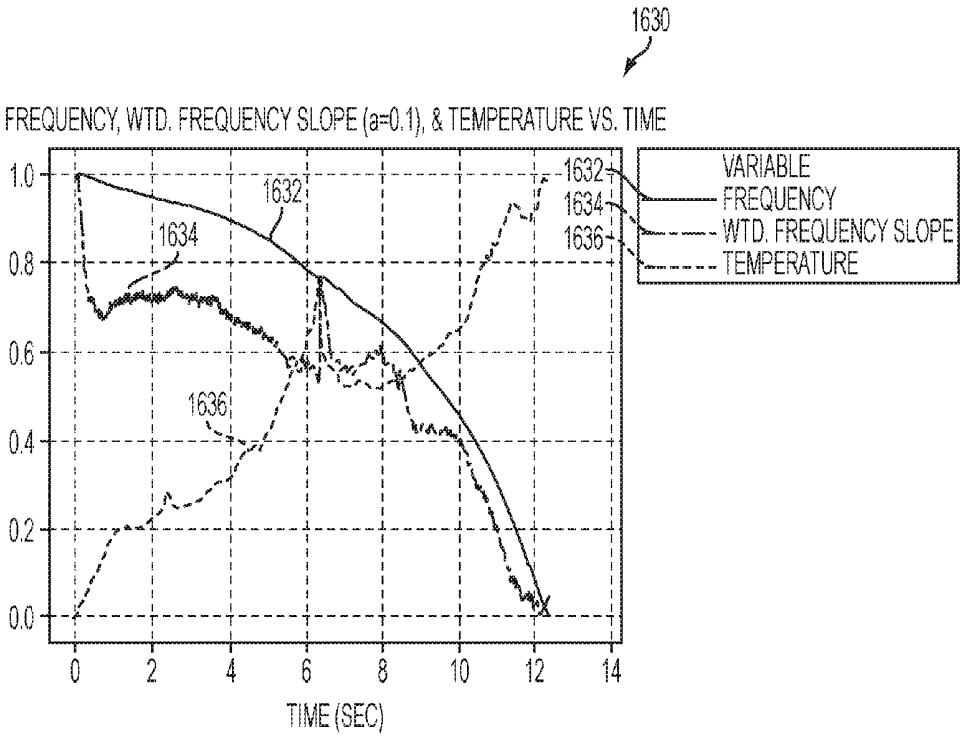
1630
FREQUENCY, WTD. FREQUENCY SLOPE (a=0.1), & TEMPERATURE VS. TIME
1.0
0.8
0.6
0.4
0.2
0.0
0
2
4
6
8
10
12
14
TIME (SEC)
1632
1634
1636
VARIABLE
FREQUENCY
WTD. FREQUENCY SLOPE
TEMPERATURE

FIG. 32

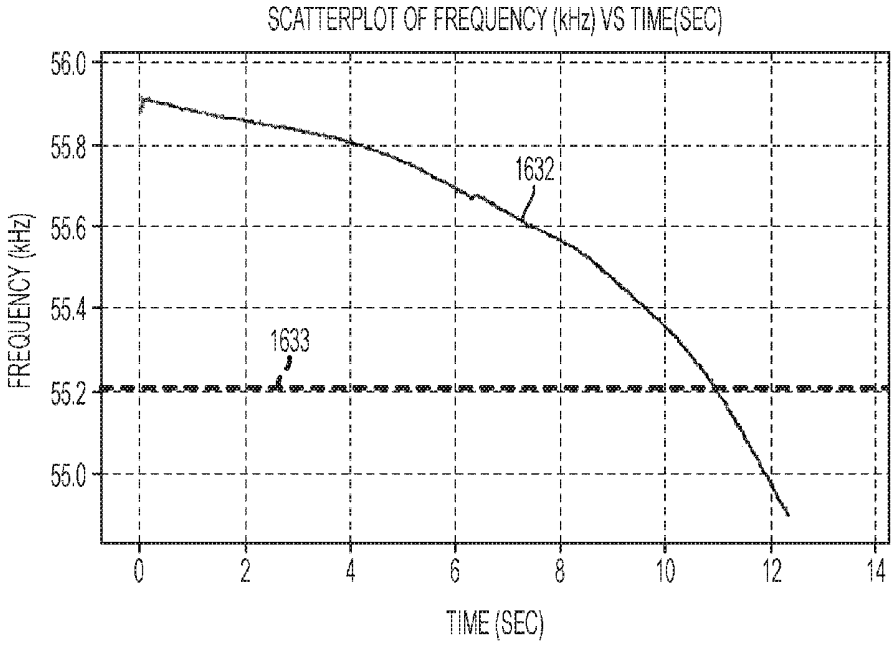
SCATTERPLOT OF FREQUENCY (kHz) VS TIME(SEC)
56.0
55.8
55.6
55.4
55.2
55.0
FREQUENCY (kHz)
0
2
4
6
8
10
12
14
TIME (SEC)
1632
1633

FIG. 33

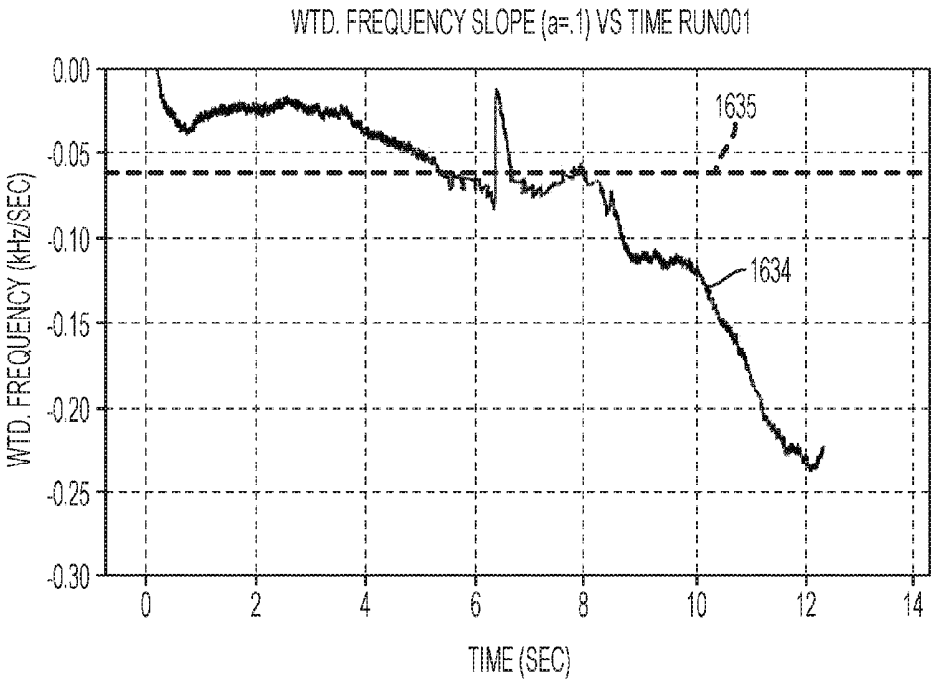
WTD. FREQUENCY SLOPE (a=.1) VS TIME RUN001
WTD. FREQUENCY (kHz/SEC)
0.00
-0.05
-0.10
-0.15
-0.20
-0.25
-0.30
0
2
4
6
8
10
12
14
TIME (SEC)
1635
1634

FIG. 34

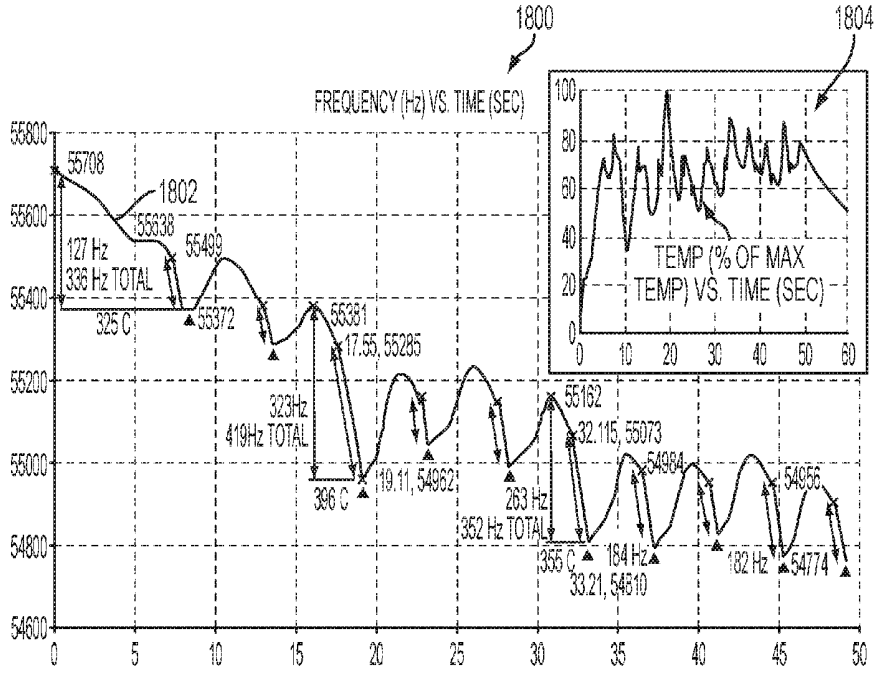
1800
1804
FREQUENCY (Hz) VS. TIME (SEC)
TEMP (% OF MAX TEMP) VS. TIME (SEC)
55708
1802
55638
55499
127 Hz
336 Hz TOTAL
325 C
55372
55381
17.55, 55285
323Hz
419Hz TOTAL
396 C
19.11, 54962
55162
32.115, 55073
54984
54956
263 Hz
352 Hz TOTAL
355 C
184 Hz
33.21, 54810
182 Hz
54774

FIG. 35

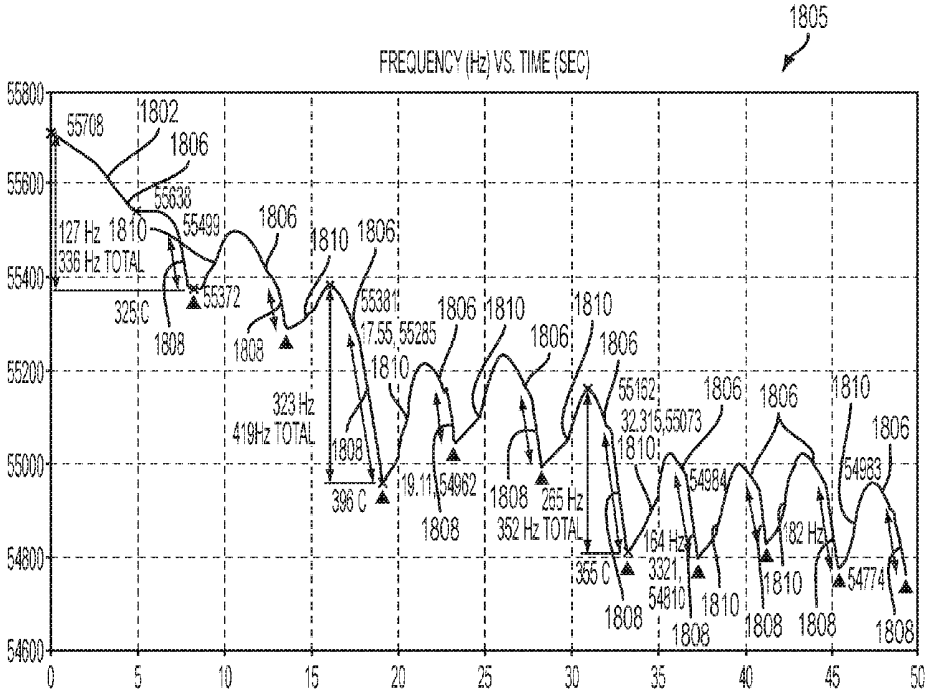
1805
FREQUENCY (Hz) VS. TIME (SEC)
55708
1802
1806
55638
55499
127 Hz
336 Hz TOTAL
1810
325 C
55372
1808
1803
55381
17.55, 55285
323 Hz
419Hz TOTAL
396 C
19.11, 54962
55162
32.315, 55073
54984
54983
265 Hz
352 Hz TOTAL
355 C
184 Hz
3321, 54810
182 Hz
54774

FIG. 36

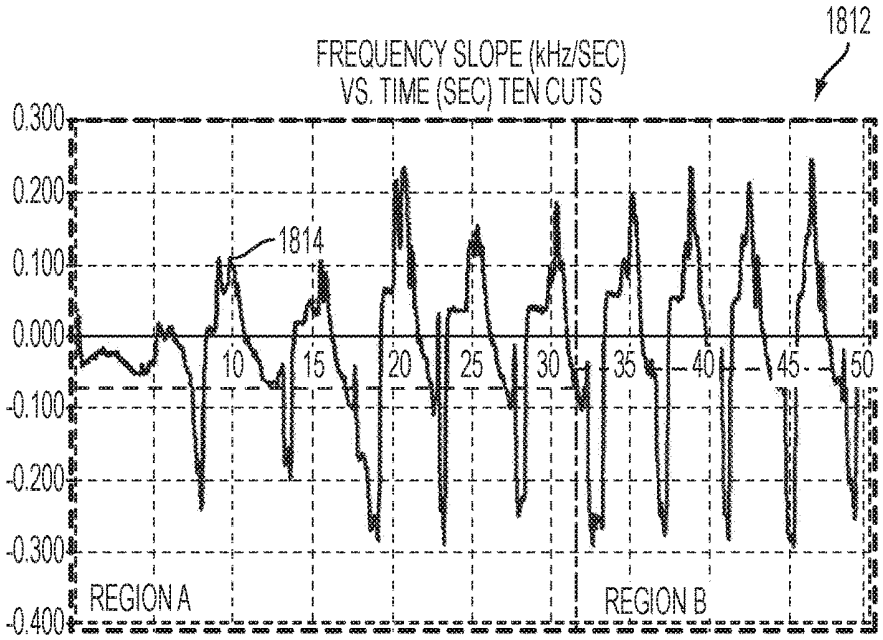
1812
FREQUENCY SLOPE (kHz/SEC)
VS. TIME (SEC) TEN CUTS
0.300
0.200
0.100
0.000
-0.100
-0.200
-0.300
-0.400
1814
10
15
20
25
30
35
40
45
50
REGION A
REGION B

FIG. 37

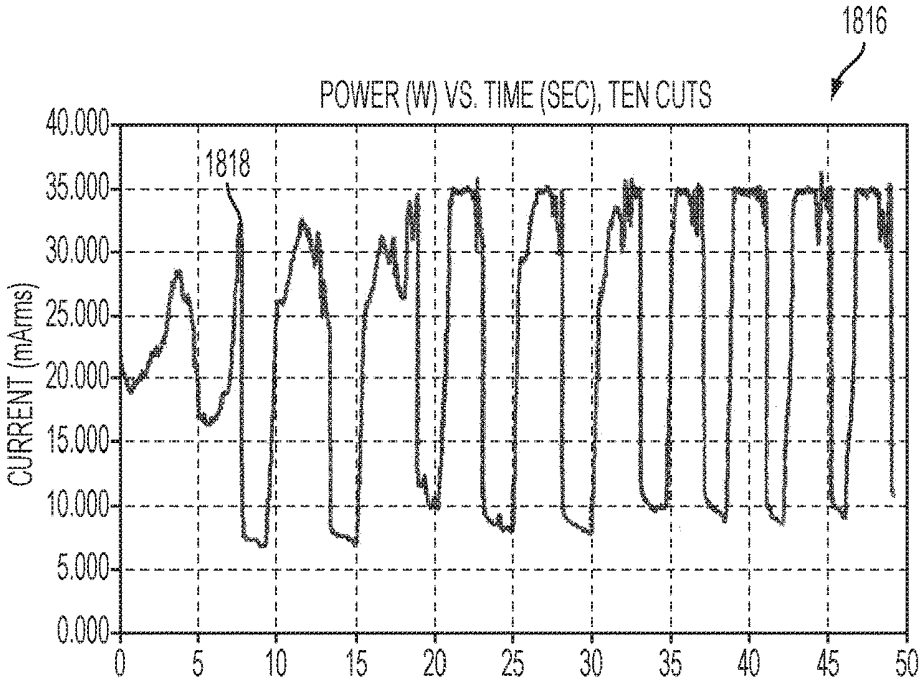
1816
POWER (W) VS. TIME (SEC), TEN CUTS
CURRENT (mArms)
40.000
35.000
30.000
25.000
20.000
15.000
10.000
5.000
0.000
1818
0
5
10
15
20
25
30
35
40
45
50

FIG. 38

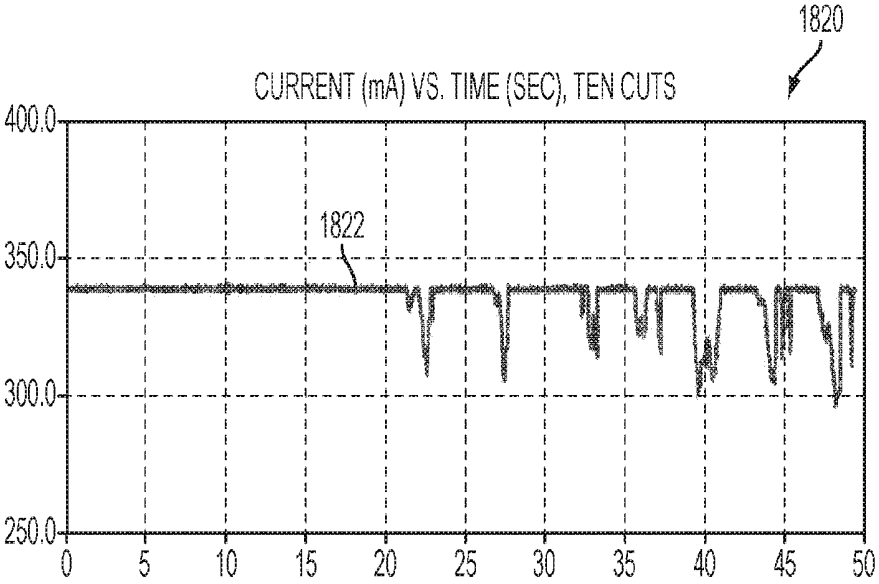
1820
CURRENT (mA) VS. TIME (SEC), TEN CUTS
400.0
350.0
300.0
250.0
1822
0
5
10
15
20
25
30
35
40
45
50

FIG. 39

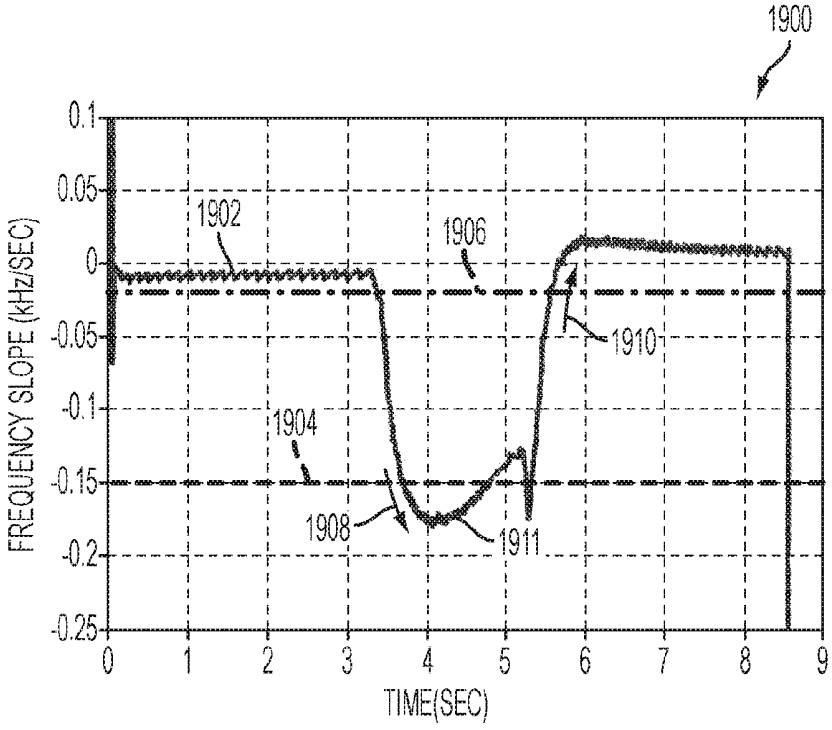
1900
0.1
0.05
0
-0.05
-0.1
-0.15
-0.2
-0.25
FREQUENCY SLOPE (kHz/SEC)
1902
1906
1910
1904
1908
1911
0
1
2
3
4
5
6
7
8
9
TIME(SEC)

FIG. 40

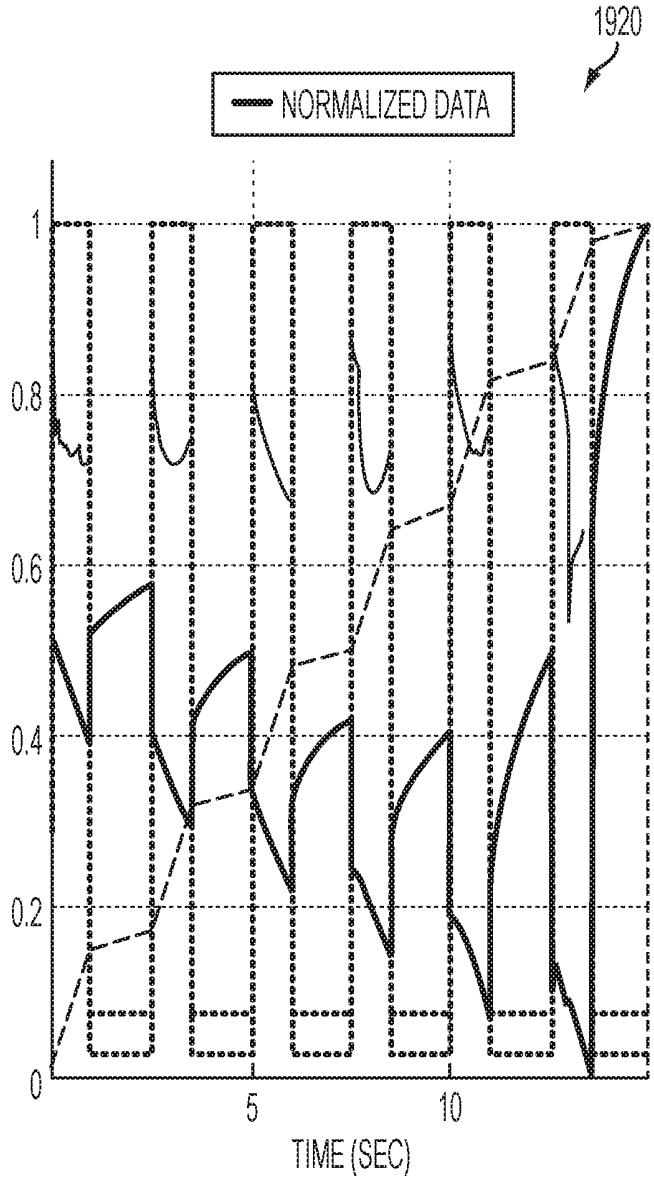


FIG. 41

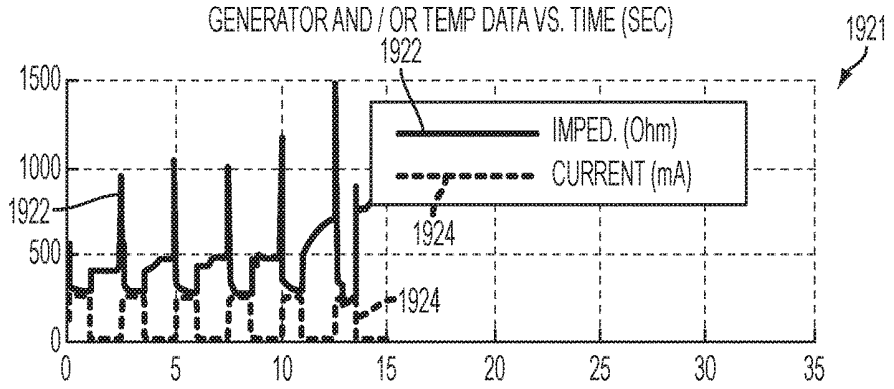


FIG. 42A

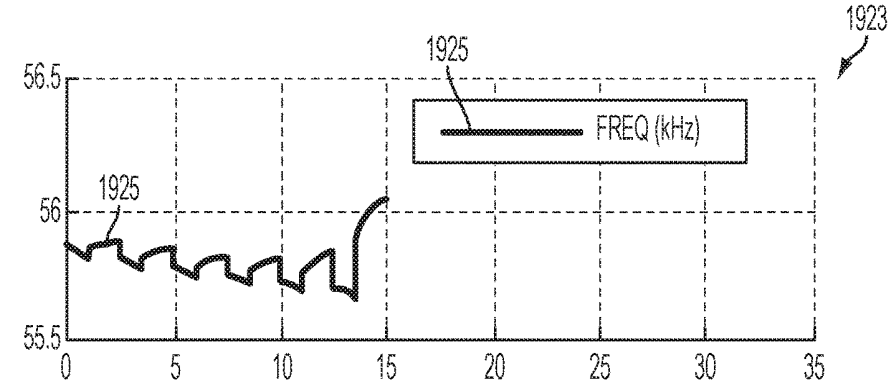


FIG. 42B

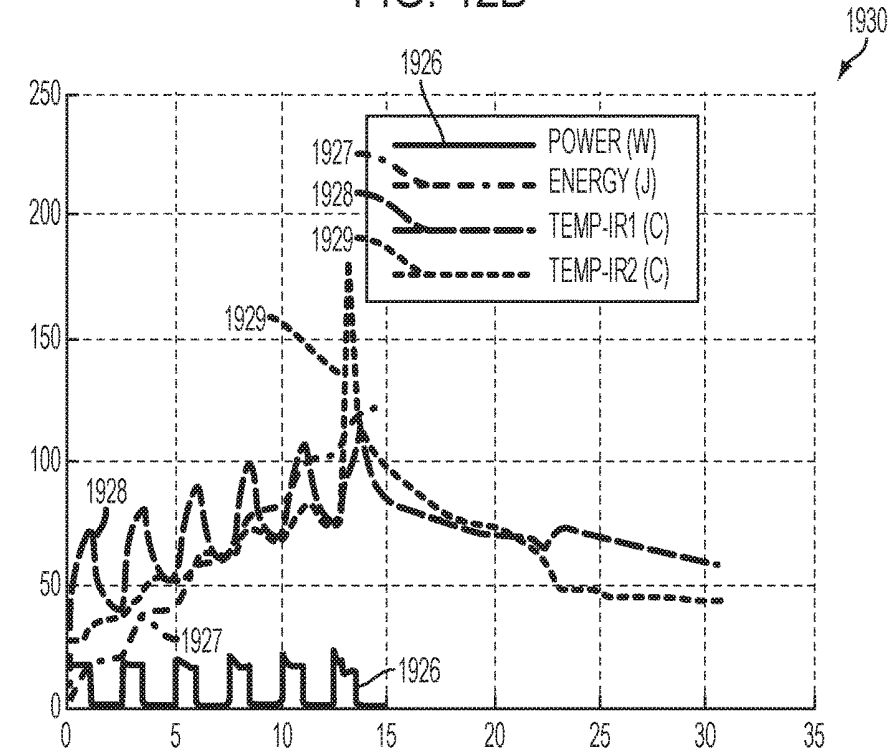


FIG. 42C

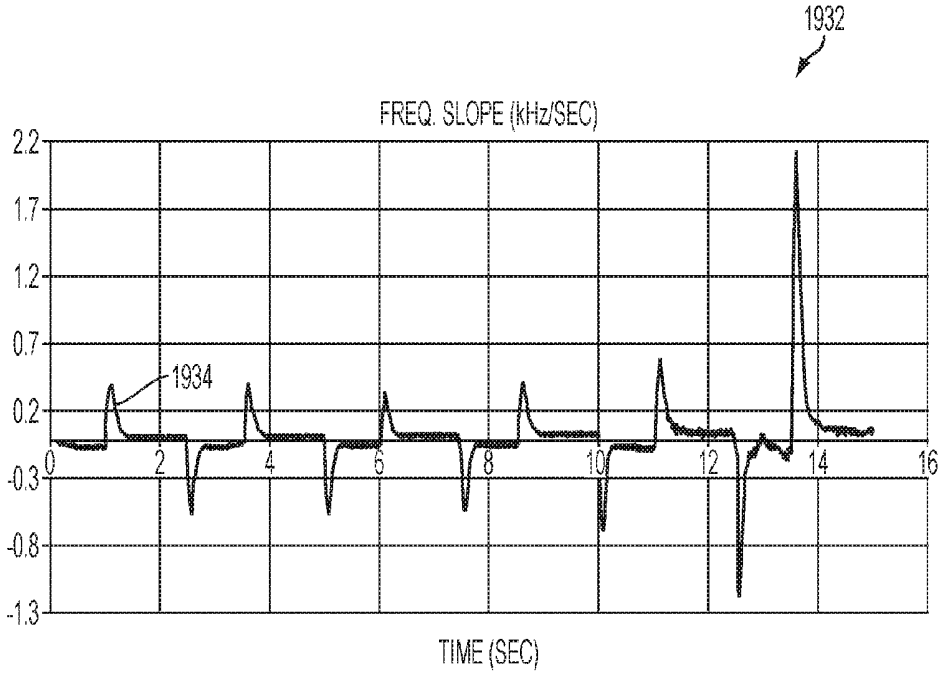
1932
FREQ. SLOPE (kHz/SEC)
2.2
1.7
1.2
0.7
0.2
-0.3
-0.8
-1.3
1934
0
2
4
6
8
10
12
14
16
TIME (SEC)

FIG. 43

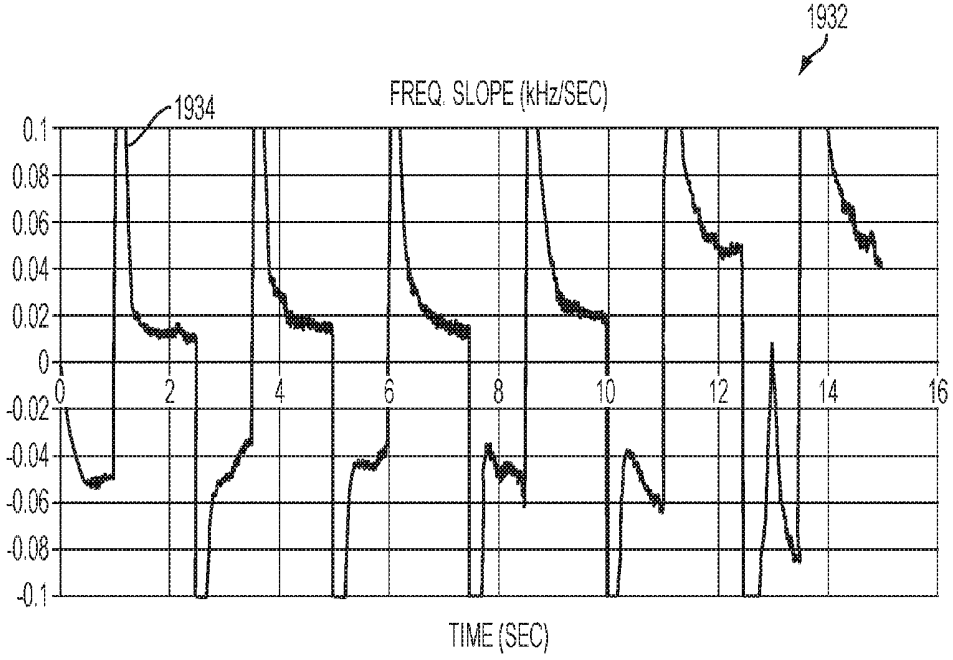
1932
FREQ. SLOPE (kHz/SEC)
1934
0.1
0.08
0.06
0.04
0.02
0
-0.02
-0.04
-0.06
-0.08
-0.1
0
2
4
6
8
10
12
14
16
TIME (SEC)

FIG. 44

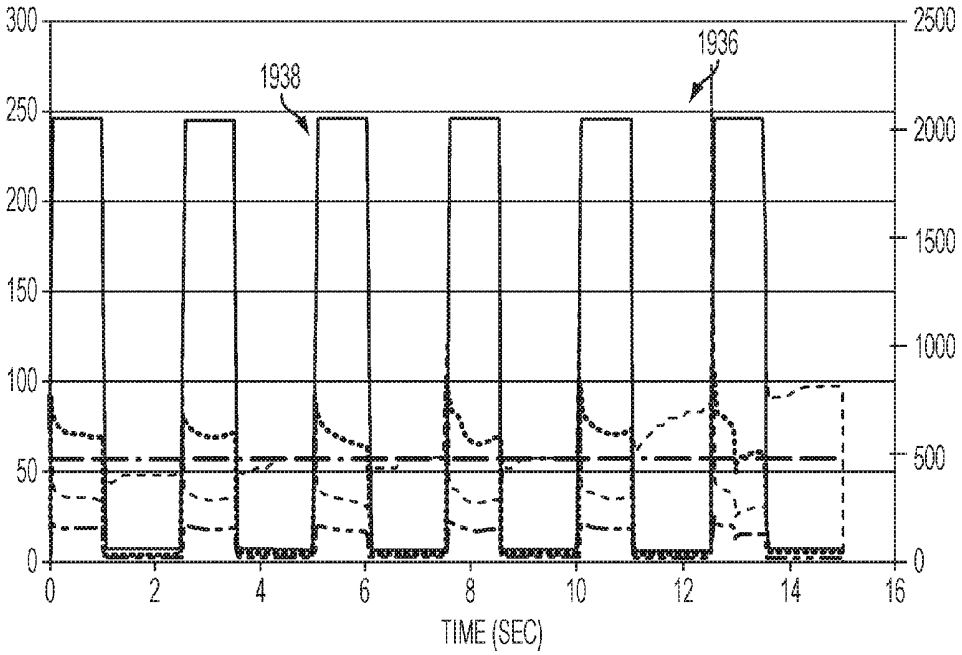
300
250
200
150
100
50
0
2500
2000
1500
1000
500
0
1938
1936
0
2
4
6
8
10
12
14
16
TIME (SEC)

FIG. 45

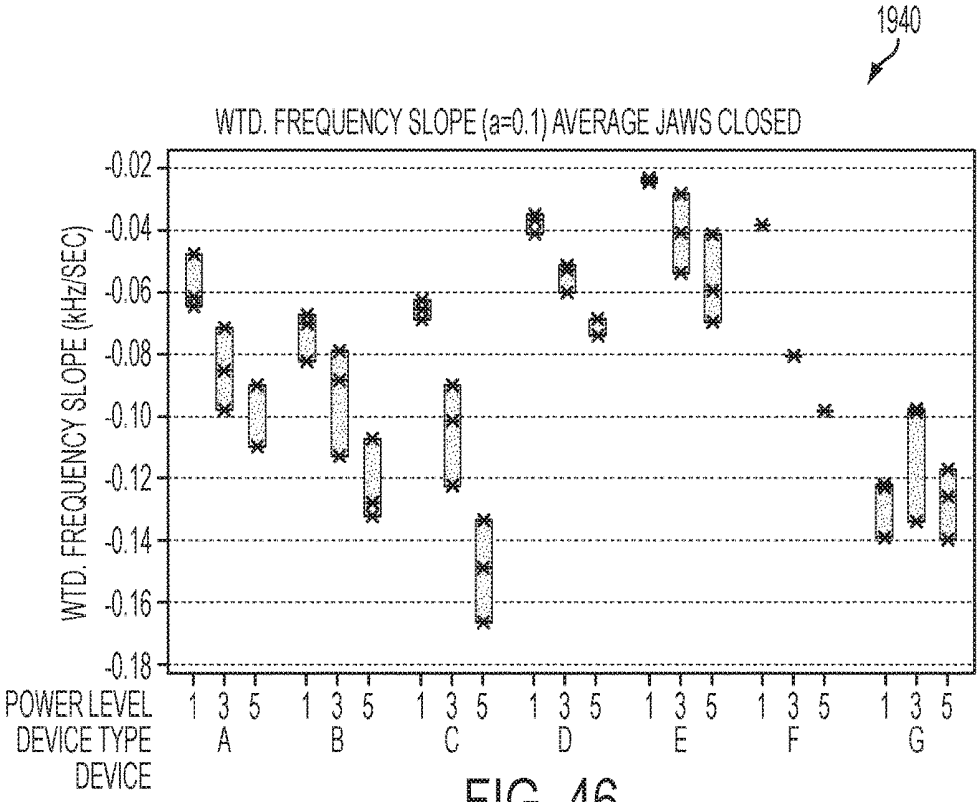
1940
WTD. FREQUENCY SLOPE (a=0.1) AVERAGE JAWS CLOSED
WTD. FREQUENCY SLOPE (kHz/SEC)
-0.02
-0.04
-0.06
-0.08
-0.10
-0.12
-0.14
-0.16
-0.18
POWER LEVEL
DEVICE TYPE
DEVICE
1 3 5 1 3 5 1 3 5 1 3 5 1 3 5 1 3 5 1 3 5
A B C D E F G

FIG. 46

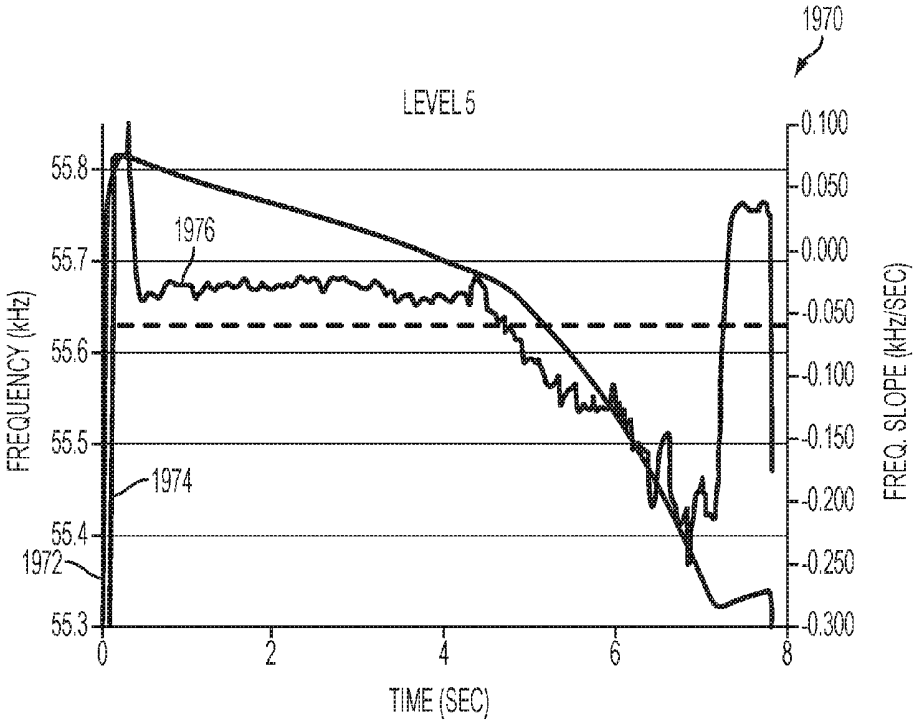
1970
LEVEL 5
55.8
55.7
55.6
55.5
55.4
55.3
FREQUENCY (kHz)
1976
1974
1972
0.100
0.050
0.000
-0.050
-0.100
-0.150
-0.200
-0.250
-0.300
FREQ. SLOPE (kHz/SEC)
0
2
4
6
8
TIME (SEC)

FIG. 47

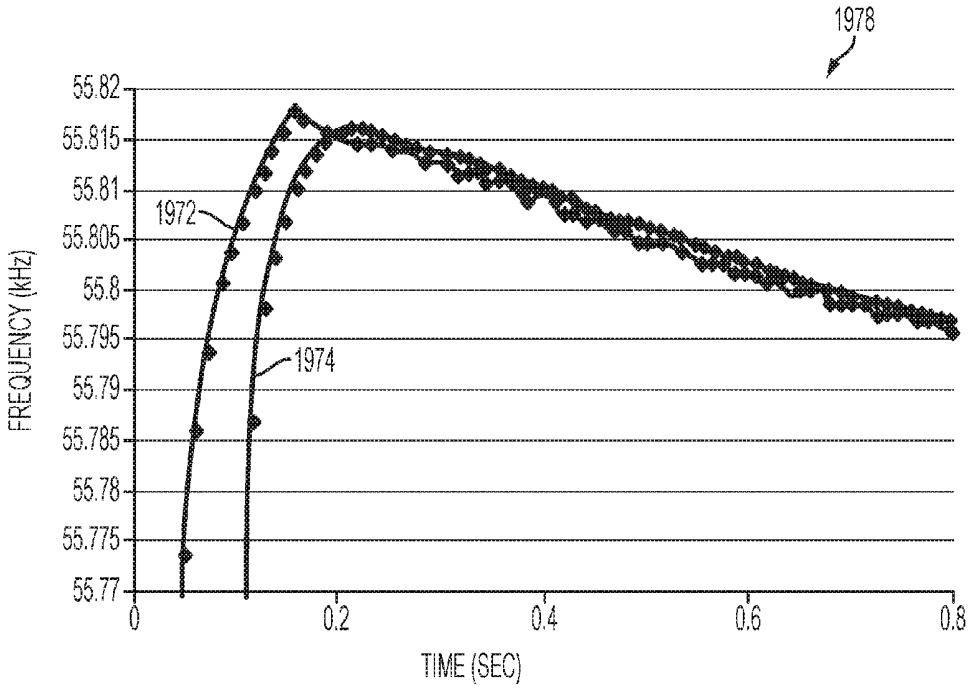
1978
55.82
55.815
55.81
55.805
55.8
55.795
55.79
55.785
55.78
55.775
55.77
FREQUENCY (kHz)
1972
1974
0
0.2
0.4
0.6
0.8
TIME (SEC)

FIG. 48

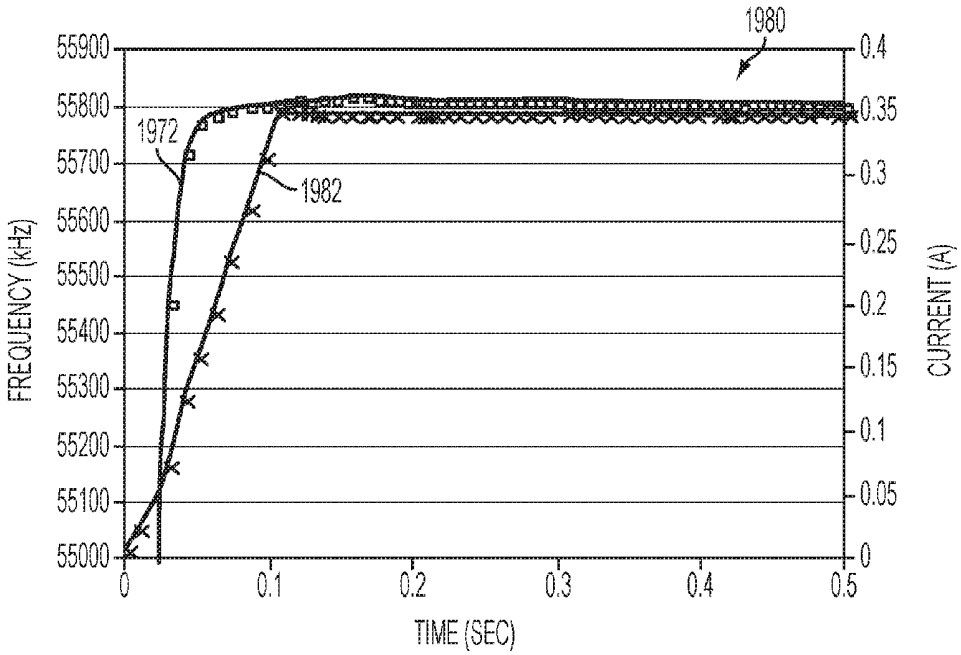
1980
55900
55800
55700
55600
55500
55400
55300
55200
55100
55000
FREQUENCY (kHz)
0.4
0.35
0.3
0.25
0.2
0.15
0.1
0.05
0
CURRENT (A)
1972
1982
0
0.1
0.2
0.3
0.4
0.5
TIME (SEC)

FIG. 49

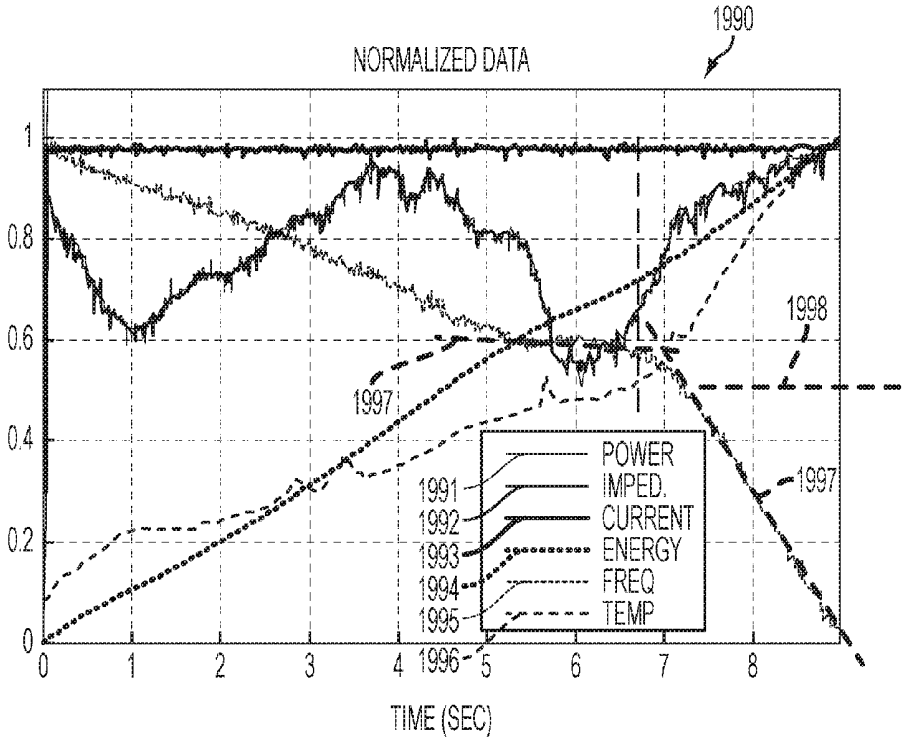
1990
NORMALIZED DATA
1
0.8
0.6
0.4
0.2
0
1998
1997
1997
POWER
IMPED.
CURRENT
ENERGY
FREQ
TEMP
1991
1992
1993
1994
1995
1996
0
1
2
3
4
5
6
7
8
TIME (SEC)

FIG. 50

# DEVICES AND TECHNIQUES FOR CUTTING AND COAGULATING TISSUE

## CROSS REFERENCE TO RELATED APPLICATIONS

This application is a continuation application claiming priority under 35 U.S.C. § 120 to U.S. patent application Ser. No. 14/664,233, entitled DEVICES AND TECHNIQUES FOR CUTTING AND COAGULATING TISSUE, filed Mar. 20, 2015, which issued on Nov. 29, 2016 as U.S. Pat. No. 9,504,855, which is a divisional application claiming priority under 35 U.S.C. § 121 to U.S. patent application Ser. No. 12/896,351, entitled DEVICE AND TECHNIQUE FOR CUTTING AND COAGULATING TISSUE, filed Oct. 1, 2010, which issued on Jul. 28, 2015 as U.S. Pat. No. 9,089,360, which is a continuation-in-part application claiming priority under of 35 U.S.C. § 120 to U.S. patent application Ser. No. 12/503,775, entitled ULTRASONIC DEVICE FOR CUTTING AND COAGULATING WITH STEPPED OUTPUT, filed Jul. 15, 2009, which issued on Nov. 15, 2011 as U.S. Pat. No. 8,058,771, which claims the benefit under Title 35, United States Code § 119(e), of (1) U.S. Provisional Patent Application Ser. No. 61/086,619, entitled ULTRASONIC DEVICE FOR CUTTING AND COAGULATING WITH STEPPED OUTPUT, filed Aug. 6, 2008 and (2) U.S. Provisional Patent Application Ser. No. 61/188,790, entitled ULTRASONIC DEVICE FOR CUTTING AND COAGULATING WITH STEPPED OUTPUT, filed Aug. 13, 2008, the entire disclosures of which are hereby incorporated by reference herein.

U.S. patent application Ser. No. 12/896,351 also claims the benefit under Title 35, United States Code § 119(e), of U.S. Provisional Patent Application Ser. No. 61/250,217, entitled A DUAL BIPOLAR AND ULTRASONIC GENERATOR FOR ELECTRO-SURGICAL INSTRUMENTS, filed Oct. 9, 2009, the entire disclosure of which is hereby incorporated by reference herein.

## TECHNICAL FIELD

The present disclosure generally relates to ultrasonic surgical systems and, more particularly, to an ultrasonic system that allows surgeons to perform cutting and coagulation.

## BACKGROUND

Ultrasonic surgical instruments are finding increasingly widespread applications in surgical procedures by virtue of the unique performance characteristics of such instruments. Depending upon specific instrument configurations and operational parameters, ultrasonic surgical instruments can provide substantially simultaneous cutting of tissue and hemostasis by coagulation, desirably minimizing patient trauma. The cutting action is typically realized by an-end effector, or blade tip, at the distal end of the instrument, which transmits ultrasonic energy to tissue brought into contact with the end effector. Ultrasonic instruments of this nature can be configured for open surgical use, laparoscopic, or endoscopic surgical procedures including robotic-assisted procedures.

Some surgical instruments utilize ultrasonic energy for both precise cutting and controlled coagulation. Ultrasonic energy cuts and coagulates by using lower temperatures than those used by electrosurgery. Vibrating at high frequencies (e.g., 55,500 times per second), the ultrasonic blade denatures protein in the tissue to form a sticky coagulum. Pressure exerted on tissue with the blade surface collapses blood vessels and allows the coagulum to form a hemostatic seal. The precision of cutting and coagulation is controlled by the surgeon's technique and adjusting the power level, blade edge, tissue traction, and blade pressure.

A primary challenge of ultrasonic technology for medical devices, however, continues to be sealing of blood vessels. Work done by the applicant and others has shown that optimum vessel sealing occurs when the inner muscle layer of a vessel is separated and moved away from the adventitia layer prior to the application of standard ultrasonic energy. Current efforts to achieve this separation have involved increasing the clamp force applied to the vessel.

Furthermore, the user does not always have visual feedback of the tissue being cut. Accordingly, it would be desirable to provide some form of feedback to indicate to the user that the cut is complete when visual feedback is unavailable. Moreover, without some form of feedback indicator to indicate that the cut is complete, the user may continue to activate the harmonic instrument even though the cut is complete, which cause possible damage to the harmonic instrument and surrounding tissue by the heat that is generated when activating a harmonic instrument with little to nothing between the jaws.

The ultrasonic transducer may be modeled as an equivalent circuit having first branch comprising a static capacitance and a second "motional" branch comprising a serially connected inductance, resistance and capacitance that defines the electromechanical properties of the resonator. Conventional ultrasonic generators may include a tuning inductor for tuning out the static capacitance at a resonant frequency so that substantially all of generator's current output flows into the motional branch. The motional branch current, along with the drive voltage, define the impedance and phase magnitude. Accordingly, using a tuning inductor, the generator's current output represents the motional branch current, and the generator is thus able to maintain its drive output at the ultrasonic transducer's resonant frequency. The tuning inductor also transforms the phase impedance plot of the ultrasonic transducer to improve the generator's frequency lock capabilities. However, the tuning inductor must be matched with the specific static capacitance of an ultrasonic transducer. A different ultrasonic transducer having a different static capacitance requires a different tuning inductor.

Electrosurgical devices for applying electrical energy to tissue in order to treat and/or destroy the tissue are also finding increasingly widespread applications in surgical procedures. An electrosurgical device typically includes a handpiece, an instrument having a distally-mounted end effector (e.g., one or more electrodes). The end effector can be positioned against the tissue such that electrical current is introduced into the tissue. Electrosurgical devices can be configured for bipolar or monopolar operation. During bipolar operation, current is introduced into and returned from the tissue by active and return electrodes, respectively, of the end effector. During monopolar operation, current is introduced into the tissue by an active electrode of the end effector and returned through a return electrode (e.g., a grounding pad) separately located on a patient's body. Heat generated by the current flowing through the tissue may form hemostatic seals within the tissue and/or between tissues and thus may be particularly useful for sealing blood vessels, for example. The end effector of an electrosurgical device may also include a cutting member that is movable relative to the tissue and the electrodes to transect the tissue.

Electrical energy applied by an electrosurgical device can be transmitted to the instrument by a generator in communication with the handpiece. The electrical energy may be in the form of radio frequency ("RF") energy. RF energy is a form of electrical energy that may be in the frequency range of 300 kilohertz (kHz) to 1 megahertz (MHz). In application, an electrosurgical device can transmit low frequency RF energy through tissue, which causes ionic agitation, or friction, in effect resistive heating, thereby increasing the temperature of the tissue. Because a sharp boundary is created between the affected tissue and the surrounding tissue, surgeons can operate with a high level of precision and control, without sacrificing un-targeted adjacent tissue. The low operating temperatures of RF energy is useful for removing, shrinking, or sculpting soft tissue while simultaneously sealing blood vessels. RF energy works particularly well on connective tissue, which is primarily comprised of collagen and shrinks when contacted by heat.

Due to their unique drive signal, sensing and feedback needs, ultrasonic and electrosurgical instruments have generally required dedicated generators. Additionally, in cases where the instrument is disposable or interchangeable with a handpiece, ultrasonic and electrosurgical generators are limited in their ability to recognize the particular instrument configuration being used and to optimize control and diagnostic processes accordingly. Moreover, capacitive coupling of signals from the generator into patient-isolated circuits, especially in cases of higher voltage and frequency ranges, may result in exposure of a patient to unacceptable levels of leakage current.

It would be desirable to provide a surgical instrument that overcomes some of the deficiencies of current instruments. The surgical system described herein overcomes those deficiencies.

## SUMMARY

One embodiment discloses a method of driving an end effector coupled to an ultrasonic drive system of a surgical instrument. The method comprises generating at least one electrical signal by a generator. The at least one electrical signal is monitored against a first set of logic conditions. A first response of the generator is triggered when the first set of logic conditions is met. A parameter associated with the surgical instrument is determined from the at least one electrical signal.

## FIGURES

The novel features of the described embodiments are set forth with particularity in the appended claims. The described embodiments, however, both as to organization and methods of operation, may be best understood by reference to the following description, taken in conjunction with the accompanying drawings in which:

FIG. **1** is a perspective view illustrating one embodiment of an ultrasonic surgical instrument.

FIG. **2** is an exploded perspective assembly view of one embodiment of an ultrasonic surgical instrument.

FIG. **3** is a schematic of one embodiment of a clamp arm illustrating force calculations.

FIG. **4** is a graphical representation of current, voltage, power, impedance, and frequency waveforms of a conventional oscillator at high power and lightly loaded.

FIG. **5** is a graphical representation of current, voltage, power, impedance, and frequency waveforms of a conventional oscillator at high power and heavily loaded.

FIG. **6** is a graphical representation of a current step function waveform and voltage, power, impedance, and frequency waveforms of one embodiment of an oscillator and unloaded.

FIG. **7** is a graphical representation of a current step function waveform and voltage, power, impedance, and frequency waveforms of one embodiment of an oscillator and lightly loaded.

FIG. **8** is a graphical representation of a current step function waveform and voltage, power, impedance, and frequency waveforms of one embodiment of an oscillator and heavily loaded.

FIG. **9** illustrates one embodiment of a drive system of a generator, which creates the ultrasonic electrical signal for driving an ultrasonic transducer.

FIG. **10** illustrates one embodiment of a surgical system comprising an ultrasonic surgical instrument and a generator comprising a tissue impedance module.

FIG. **11** illustrates one embodiment of a drive system of a generator comprising a tissue impedance module.

FIG. **12** illustrates one embodiment of a clamp arm assembly that may be employed with a surgical system.

FIG. **13** is a schematic diagram of a tissue impedance module coupled to a blade and a clamp arm assembly with tissue located therebetween.

FIG. **14** illustrates one embodiment of a method for driving an end effector coupled to an ultrasonic drive system of a surgical instrument.

FIG. **15**A illustrates a logic flow diagram of one embodiment of determining a change in tissue state and activating an output indicator accordingly.

FIG. **15**B is a logic flow diagram illustrating one embodiment of the operation of the frequency inflection point analysis module.

FIG. **15**C is a logic flow diagram **900** illustrating one embodiment of the operation of the voltage drop analysis module.

FIG. **16** illustrates one embodiment of a surgical system comprising a generator and various surgical instruments usable therewith.

FIG. **17** is a diagram of the surgical system of FIG. **16**.

FIG. **18** is a model illustrating motional branch current in one embodiment.

FIG. **19** is a structural view of a generator architecture in one embodiment.

FIG. **20** is a logic flow diagram of a tissue algorithm that may be implemented in one embodiment of a generator.

FIG. **21** is a logic flow diagram of a signal evaluation tissue algorithm portion of the tissue algorithm shown in FIG. **20** that may be implemented in one embodiment of a generator.

FIG. **22** is a logic flow diagram for evaluating condition sets for the signal evaluation tissue algorithm shown in FIG. **21** that may be implemented in one embodiment of a generator.

FIG. **23** is a graphical representation of frequency slope (first time derivative of frequency) versus time waveform of one embodiment of a generator during a typical tissue cut.

FIG. **23**A is a graphical representation of slope of frequency slope (second time derivative of frequency) versus time waveform shown in dashed line superimposed over the waveform shown in FIG. **23** of one embodiment of a generator during a typical tissue cut.

FIG. **24** is a graphical representation of frequency versus time waveform of one embodiment of a generator during a typical tissue cut as it relates to the graphical representation shown in FIG. **23**.

FIG. **25** is a graphical representation of drive power versus time waveform of one embodiment of a generator during a typical tissue cut as it relates to the graphical representation shown in FIG. **23**.

FIG. **26** is a graphical representation of frequency slope versus time waveform of one embodiment of a generator during a burn-in test.

FIG. **27** is a graphical representation of frequency versus time waveform of one embodiment of a generator during a burn-in test as it relates to the graphical representation shown in FIG. **26**.

FIG. **28** is a graphical representation of power consumption versus time waveform of one embodiment of a generator during a burn-in test as it relates to the graphical representation shown in FIG. **26**.

FIG. **29** is a graphical representation of frequency change over time waveform of several generator/instrument combinations during burn-in tests.

FIG. **30** is a graphical representation of normalized combined impedance, current, frequency, power, energy, and temperature waveforms of one embodiment of a generator coupled to an ultrasonic instrument to make 10 successive cuts on excised porcine jejunum tissue as quickly as possible while keeping the generator running throughout.

FIG. **31**A is a graphical representation of impedance and current versus time waveforms of one embodiment of a generator during successive tissue cuts over a period of time.

FIG. **31**B is a graphical representation of frequency versus time waveform of one embodiment of a generator during successive tissue cuts over a period of time.

FIG. **31**C is a graphical representation of power, energy, and temperature versus time waveforms of one embodiment of a generator during successive tissue cuts over a period of time.

FIG. **32** is a combined graphical representation of frequency, weighted frequency slope waveform calculated via exponentially weighted moving average with an alpha value of 0.1, and temperature versus time waveform of one embodiment of a generator.

FIG. **33** is a graphical representation of a frequency versus time waveform shown in FIG. **32**.

FIG. **34** is a graphical representation of the weighted frequency slope versus time waveform shown in FIG. **32**.

FIG. **35** is a graphical representation of a frequency versus time waveform of one embodiment of a generator over ten cuts on jejunum tissue and a graphical representation of a temperature versus time signal.

FIG. **36** is a graphical representation of the frequency versus time waveform shown in FIG. **35** of one embodiment of a generator over ten cuts on jejunum tissue with activation of intervening tissue.

FIG. **37** is a graphical representation of a frequency slope versus time waveform of one embodiment of a generator over ten cuts on jejunum tissue.

FIG. **38** is a graphical representation of a power versus time waveform representative of power consumed by a one embodiment of a generator over ten cuts on jejunum tissue.

FIG. **39** is a graphical representation of a current versus time waveform of one embodiment of a generator over ten cuts on jejunum tissue.

FIG. **40** is a graphical representation of a "cross-back frequency slope threshold" parameter in connection with a frequency slope vs. time waveform of one embodiment of a generator.

FIG. **41** is a combined graphical representation of a pulsed application of one embodiment of an ultrasonic instrument on an excised carotid artery showing normalized power, current, energy, and frequency waveforms versus time.

FIG. **42**A is a graphical representation of impedance and current versus time waveforms of one embodiment of a generator during successive tissue cuts over a period of time.

FIG. **42**B is a graphical representation of a frequency versus time waveform of one embodiment of a generator during successive tissue cuts over a period of time.

FIG. **42**C is a graphical representation of power, energy, and temperature versus time waveforms of one embodiment of a generator during successive tissue cuts over a period of time.

FIG. **43** is a graphical representation of a calculated frequency slope waveform for the pulsed application shown in FIG. **41** and FIGS. **50**A-C plotted on a gross scale.

FIG. **44** is a zoomed in view of the graphical representation of the calculated frequency slope waveform for the pulsed application shown in FIG. **43**.

FIG. **45** is a graphical representation of other data waveforms of interest such as impedance, power, energy, temperature.

FIG. **46** is a graphical representation of a summary of weighted frequency slope versus power level for various ultrasonic instrument types.

FIG. **47** is a graphical representation of resonant frequency, averaged resonant frequency, and frequency slope versus time waveforms of one embodiment of a generator.

FIG. **48** is a zoomed in view of the resonant frequency and averaged resonant frequency versus time waveforms shown in FIG. **47**.

FIG. **49** is a zoomed in view of the resonant frequency and current versus time waveforms of one embodiment of a generator.

FIG. **50** is a graphical representation of normalized combined power, impedance, current, energy, frequency, and temperature waveforms of one embodiment of a generator coupled to an ultrasonic instrument.

## DESCRIPTION

Before explaining various embodiments of ultrasonic surgical instruments in detail, it should be noted that the illustrative embodiments are not limited in application or use to the details of construction and arrangement of parts illustrated in the accompanying drawings and description. The illustrative embodiments may be implemented or incorporated in other embodiments, variations and modifications, and may be practiced or carried out in various ways. Further, unless otherwise indicated, the terms and expressions employed herein have been chosen for the purpose of describing the illustrative embodiments for the convenience of the reader and are not for the purpose of limitation thereof.

Further, it is understood that any one or more of the following-described embodiments, expressions of embodiments, examples, can be combined with any one or more of the other following-described embodiments, expressions of embodiments, and examples.

Various embodiments are directed to improved ultrasonic surgical instruments configured for effecting tissue dissecting, cutting, and/or coagulation during surgical procedures. In one embodiment, an ultrasonic surgical instrument apparatus is configured for use in open surgical procedures, but has applications in other types of surgery, such as laparoscopic, endoscopic, and robotic-assisted procedures. Versatile use is facilitated by selective use of ultrasonic energy.

The various embodiments will be described in combination with an ultrasonic instrument as described herein. Such description is provided by way of example, and not limitation, and is not intended to limit the scope and applications thereof. For example, any one of the described embodiments is useful in combination with a multitude of ultrasonic instruments including those described in, for example, U.S. Pat. Nos. 5,938,633; 5,935,144; 5,944,737; 5,322,055; 5,630,420; and 5,449,370.

As will become apparent from the following description, it is contemplated that embodiments of the surgical instrument described herein may be used in association with an oscillator unit of a surgical system, whereby ultrasonic energy from the oscillator unit provides the desired ultrasonic actuation for the present surgical instrument. It is also contemplated that embodiments of the surgical instrument described herein may be used in association with a signal generator unit of a surgical system, whereby electrical energy in the form of radio frequencies (RF), for example, is used to provide feedback to the user regarding the surgical instrument. The ultrasonic oscillator and/or the signal generator unit may be non-detachably integrated with the surgical instrument or may be provided as separate components, which can be electrically attachable to the surgical instrument.

One embodiment of the present surgical apparatus is particularly configured for disposable use by virtue of its straightforward construction. However, it is also contemplated that other embodiments of the present surgical instrument can be configured for non-disposable or multiple uses. Detachable connection of the present surgical instrument with an associated oscillator and signal generator unit is presently disclosed for single-patient use for illustrative purposes only. However, non-detachable integrated connection of the present surgical instrument with an associated oscillator and/or signal generator unit is also contemplated. Accordingly, various embodiments of the presently described surgical instruments may be configured for single use and/or multiple use with either detachable and/or non-detachable integral oscillator and/or signal generator unit, without limitation, and all combinations of such configurations are contemplated to be within the scope of the present disclosure.

With reference to FIGS. **1-3**, one embodiment of a surgical system **19** including an ultrasonic surgical instrument **100** is illustrated. The surgical system **19** includes an ultrasonic generator **30** connected to an ultrasonic transducer **50** via a suitable transmission medium such as a cable **22**, and an ultrasonic surgical instrument **100**. Although in the presently disclosed embodiment, the generator **30** is shown separate from the surgical instrument **100**, in one embodiment, the generator **30** may be formed integrally with the surgical instrument **100** to form a unitary surgical system **19**. The generator **30** comprises an input device **406** located on a front panel of the generator **30** console. The input device **406** may comprise any suitable device that generates signals suitable for programming the operation of the generator **30** as subsequently described with reference to FIG. **9**. Still with reference to FIGS. **1-3**, the cable **22** may comprise multiple electrical conductors for the application of electrical energy to positive (+) and negative (−) electrodes of the ultrasonic transducer **50**. It will be noted that, in some applications, the ultrasonic transducer **50** may be referred to as a "handle assembly" because the surgical instrument **100** of the surgical system **19** may be configured such that a surgeon may grasp and manipulate the ultrasonic transducer **50** during various procedures and operations. A suitable generator **30** is the GEN 300 sold by Ethicon Endo-Surgery, Inc. of Cincinnati, Ohio as is disclosed in one or more of the following U.S. Patents, all of which are incorporated by reference herein: U.S. Pat. No. 6,480,796 (Method for Improving the Start Up of an Ultrasonic System Under Zero Load Conditions); U.S. Pat. No. 6,537,291 (Method for Detecting a Loose Blade in a Handle Connected to an Ultrasonic Surgical System); U.S. Pat. No. 6,626,926 (Method for Driving an Ultrasonic System to Improve Acquisition of Blade Resonance Frequency at Startup); U.S. Pat. No. 6,633,234 (Method for Detecting Blade Breakage Using Rate and/or Impedance Information); U.S. Pat. No. 6,662,127 (Method for Detecting Presence of a Blade in an Ultrasonic System); U.S. Pat. No. 6,678,621 (Output Displacement Control Using Phase Margin in an Ultrasonic Surgical Handle); U.S. Pat. No. 6,679,899 (Method for Detecting Transverse Vibrations in an Ultrasonic Handle); U.S. Pat. No. 6,908,472 (Apparatus and Method for Altering Generator Functions in an Ultrasonic Surgical System); U.S. Pat. No. 6,977,495 (Detection Circuitry for Surgical Handpiece System); U.S. Pat. No. 7,077,853 (Method for Calculating Transducer Capacitance to Determine Transducer Temperature); U.S. Pat. No. 7,179,271 (Method for Driving an Ultrasonic System to Improve Acquisition of Blade Resonance Frequency at Startup); and U.S. Pat. No. 7,273,483 (Apparatus and Method for Alerting Generator Function in an Ultrasonic Surgical System).

In accordance with the described embodiments, the ultrasonic generator **30** produces an electrical signal of a particular voltage, current, and frequency, e.g., 55,500 cycles per second (Hz). The generator is **30** connected by the cable **22** to the handle assembly **68**, which contains piezoceramic elements forming the ultrasonic transducer **50**. In response to a switch **312***a* on the handle assembly **68** or a foot switch **434** connected to the generator **30** by another cable the generator signal is applied to the transducer **50**, which causes a longitudinal vibration of its elements. A structure connects the transducer **50** to a surgical blade **79**, which is thus vibrated at ultrasonic frequencies when the generator signal is applied to the transducer **50**. The structure is designed to resonate at the selected frequency, thus amplifying the motion initiated by the transducer **50**. In one embodiment, the generator **30** is configured to produce a particular voltage, current, and/or frequency output signal that can be stepped with high resolution, accuracy, and repeatability.

Referring to FIG. **4**, in current systems a conventional oscillator is activated at time **0** resulting in current **300** rising to a desired set point of approximately 340 mA. At approximately 2 seconds a light load is applied resulting in corresponding increases to voltage **310**, power **320**, impedance **330**, and changes in resonant frequency **340**.

Referring to FIG. **5**, in current systems a conventional oscillator is activated at time **0** resulting in the current **300** rising to a desired set point of approximately 340 mA. At approximately 2 seconds an increasing load is applied resulting in corresponding increases to the voltage **310**, power **320**, impedance **330**, and changes in resonant frequency **340**. At approximately 7 seconds, the load has increased to the point that the oscillator enters into a flat power mode where further increases in load maintain the power at 35 W as long as the oscillator stays within voltage limits of the power supply. The current **300** and therefore, displacement, varies during flat power mode. At approximately 11.5 seconds, the load is reduced to the point where the current **300** returns to the desired set point of approxi-

mately 340 mA. The voltage **310**, power **320**, impedance **330**, and resonant frequency **340** vary with the load.

With reference now back to FIGS. **1-3**, the ultrasonic surgical instrument **100** includes a multi-piece handle assembly **68** adapted to isolate the operator from the vibrations of the acoustic assembly contained within the ultrasonic transducer **50**. The handle assembly **68** can be shaped to be held by a user in a conventional manner, but it is contemplated that the present ultrasonic surgical instrument **100** principally be grasped and manipulated by a trigger-like arrangement provided by a handle assembly of the instrument, as will be described. While a multi-piece handle assembly **68** is illustrated, the handle assembly **68** may comprise a single or unitary component. The proximal end of the ultrasonic surgical instrument **100** receives and is fitted to the distal end of the ultrasonic transducer **50** by insertion of the transducer **50** into the handle assembly **68**. In one embodiment, the ultrasonic surgical instrument **100** may be attached to and removed from the ultrasonic transducer **50** as a unit. In other embodiments, the ultrasonic surgical instrument **100** and the ultrasonic transducer **50** may be formed as an integral unit. The ultrasonic surgical instrument **100** may include a handle assembly **68**, comprising a mating housing portion **69**, a housing portion **70**, and a transmission assembly **71**. When the present instrument is configured for endoscopic use, the construction can be dimensioned such that the transmission assembly **71** has an outside diameter of approximately 5.5 mm. The elongated transmission assembly **71** of the ultrasonic surgical instrument **100** extends orthogonally from the instrument handle assembly **68**. The transmission assembly **71** can be selectively rotated with respect to the handle assembly **68** by a rotation knob **29** as further described below. The handle assembly **68** may be constructed from a durable plastic, such as polycarbonate or a liquid crystal polymer. It is also contemplated that the handle assembly **68** may alternatively be made from a variety of materials including other plastics, ceramics, or metals.

The transmission assembly **71** may include an outer tubular member or an outer sheath **72**, an inner tubular actuating member **76**, a waveguide **80**, and an end effector **81** comprising, for example, the blade **79**, a clamp arm **56**, and one or more clamp pads **58**. As subsequently described, the outer sheath **72**, the actuating member **76**, and the waveguide **80** or transmission rod may be joined together for rotation as a unit (together with the ultrasonic transducer **50**) relative to the handle assembly **68**. The waveguide **80**, which is adapted to transmit ultrasonic energy from the ultrasonic transducer **50** to the blade **79** may be flexible, semi-flexible, or rigid. The waveguide **80** also may be configured to amplify the mechanical vibrations transmitted through the waveguide **80** to the blade **79** as is well known in the art. The waveguide **80** may further have features to control the gain of the longitudinal vibration along the waveguide **80** and features to tune the waveguide **80** to the resonant frequency of the system. In particular, the waveguide **80** may have any suitable cross-sectional dimension. For example, the waveguide **80** may have a substantially uniform cross-section or the waveguide **80** may be tapered at various sections or may be tapered along its entire length. In one expression of the current embodiment, the waveguide diameter is about 0.113 inches nominal to minimize the amount of deflection at the blade **79** so that gapping in the proximal portion of the end effector **81** is minimized.

The blade **79** may be integral with the waveguide **80** and formed as a single unit. In an alternate expression of the current embodiment, the blade **79** may be connected by a threaded connection, a welded joint, or other coupling mechanisms. The distal end of the blade **79** is disposed near an anti-node in order to tune the acoustic assembly to a preferred resonant frequency $f_o$ when the acoustic assembly is not loaded by tissue. When the ultrasonic transducer **50** is energized, the distal end of the blade **79** is configured to move longitudinally in the range of, for example, approximately 10 to 500 microns peak-to-peak, and preferably in the range of about 20 to about 200 microns at a predetermined vibration frequency $f_o$ of, for example, 55,500 Hz.

With particular reference to FIGS. **1-3**, therein is illustrated one embodiment of the clamp member **60** for use with the present ultrasonic surgical instrument **100** and which is configured for cooperative action with the blade **79**. The clamp member **60** in combination with the blade **79** is commonly referred to as the end effector **81**, and the clamp member **60** is also commonly referred to as the jaw. The clamp member **60** includes a pivotally movable clamp arm **56**, which is connected to the distal end of the outer sheath **72** and the actuating member **76**, in combination with a tissue engaging pad or clamp pad **58**. The clamp arm **56** is pivotally movable by a trigger **34** and the end effector **81** is rotatably movable by the rotation knob **29**. In one expression of the embodiment, the clamp pad **58** is formed from TEFLON® a trademark name of E. I. Du Pont de Nemours and Company, a low coefficient of friction polymer material, or any other suitable low-friction material. The clamp pad **58** mounts on the clamp arm **56** for cooperation with the blade **79**, with pivotal movement of the clamp arm **56** positioning the clamp pad **58** in substantially parallel relationship to, and in contact with, the blade **79**, thereby defining a tissue treatment region. By this construction, tissue is grasped between the clamp pad **58** and the blade **79**. As illustrated, the clamp pad **58** may be provided with a non-smooth surface, such as a saw tooth-like configuration to enhance the gripping of tissue in cooperation with the blade **79**. The saw tooth-like configuration, or teeth, provide traction against the movement of the blade **79**. The teeth also provide counter traction to the blade **79** and clamping movement. As would be appreciated by one skilled in the art, the saw tooth-like configuration is just one example of many tissue engaging surfaces to prevent movement of the tissue relative to the movement of the blade **79**. Other illustrative examples include bumps, criss-cross patterns, tread patterns, a bead, or sand blasted surface.

Due to sinusoidal motion, the greatest displacement or amplitude of motion is located at the most distal portion of the blade **79**, while the proximal portion of the tissue treatment region is on the order of 50% of the distal tip amplitude. During operation, the tissue in the proximal region of the end effector **81** will desiccate and thin, and the distal portion of the end effector **81** will transect tissue in that distal region, thereby allowing the desiccated and thinned tissue within the proximal region to slide distally into the more active region of the end effector **81** to complete the tissue transection.

FIG. **3** illustrates a force diagram and the relationship between the actuation force $F_A$ (provided by the actuating member **76**) and transection force $F_T$ (measured at the midpoint of the optimal tissue treatment area).

$$F_T = F_A(X_2/X_1) \quad (1)$$

Where $F_A$ equals the spring preload of a proximal spring **94** (less frictional losses), which, in one embodiment, is about 12.5 pounds, and $F_T$ equals about 4.5 pounds.

$F_T$ is measured in the region of the clamp arm/blade interface where optimal tissue treatment occurs as defined

by tissue marks **61***a* and **61***b*. The tissue marks **61***a, b* are etched or raised on the clamp arm **56** to provide a visible mark to the surgeon so the surgeon has a clear indication of the optimal tissue treatment area. The tissue marks **61***a, b* are about 7 mm apart in distance, and more preferably about 5 mm apart in distance.

FIG. **9** illustrates one embodiment of a drive system **32** of the generator **30**, which creates an ultrasonic electrical signal for driving an ultrasonic transducer. The drive system **32** is flexible and can create an ultrasonic electrical drive signal **416** at a desired frequency and power level setting for driving the ultrasonic transducer **50**. In various embodiments, the generator **30** may comprise several separate functional elements, such as modules and/or blocks. Although certain modules and/or blocks may be described by way of example, it can be appreciated that a greater or lesser number of modules and/or blocks may be used and still fall within the scope of the embodiments. Further, although various embodiments may be described in terms of modules and/or blocks to facilitate description, such modules and/or blocks may be implemented by one or more hardware components, e.g., processors, Digital Signal Processors (DSPs), Programmable Logic Devices (PLDs), Application Specific Integrated Circuits (ASICs), circuits, registers and/or software components, e.g., programs, subroutines, logic and/or combinations of hardware and software components.

In one embodiment, the generator **30** drive system **32** may comprise one or more embedded applications implemented as firmware, software, hardware, or any combination thereof. The generator **30** drive system **32** may comprise various executable modules such as software, programs, data, drivers, application program interfaces (APIs), and so forth. The firmware may be stored in nonvolatile memory (NVM), such as in bit-masked read-only memory (ROM) or flash memory. In various implementations, storing the firmware in ROM may preserve flash memory. The NVM may comprise other types of memory including, for example, programmable ROM (PROM), erasable programmable ROM (EPROM), electrically erasable programmable ROM (EEPROM), or battery backed random-access memory (RAM) such as dynamic RAM (DRAM), Double-Data-Rate DRAM (DDRAM), and/or synchronous DRAM (SDRAM).

In one embodiment, the generator **30** drive system **32** comprises a hardware component implemented as a processor **400** for executing program instructions for monitoring various measurable characteristics of the ultrasonic surgical instrument **100** (FIG. **1**) and generating a step function output signal for driving the ultrasonic transducer **50** in cutting and/or coagulation operating modes. It will be appreciated by those skilled in the art that the generator **30** and the drive system **32** may comprise additional or fewer components and only a simplified version of the generator **30** and the drive system **32** are described herein for conciseness and clarity. In various embodiments, as previously discussed, the hardware component may be implemented as a DSP, PLD, ASIC, circuits, and/or registers. In one embodiment, the processor **400** may be configured to store and execute computer software program instructions to generate the step function output signals for driving various components of the ultrasonic surgical instrument **100**, such as the transducer **50**, the end effector **81**, and/or the blade **79**.

In one embodiment, under control of one or more software program routines, the processor **400** executes the methods in accordance with the described embodiments to generate a step function formed by a stepwise waveform of drive signals comprising current (I), voltage (V), and/or frequency (f) for various time intervals or periods (T). The stepwise waveforms of the drive signals may be generated by forming a piecewise linear combination of constant functions over a plurality of time intervals created by stepping the generator **30** drive signals, e.g., output drive current (I), voltage (V), and/or frequency (f). The time intervals or periods (T) may be predetermined (e.g., fixed and/or programmed by the user) or may be variable. Variable time intervals may be defined by setting the drive signal to a first value and maintaining the drive signal at that value until a change is detected in a monitored characteristic. Examples of monitored characteristics may comprise, for example, transducer impedance, tissue impedance, tissue heating, tissue transection, tissue coagulation, and the like. The ultrasonic drive signals generated by the generator **30** include, without limitation, ultrasonic drive signals capable of exciting the ultrasonic transducer **50** in various vibratory modes such as, for example, the primary longitudinal mode and harmonics thereof as well flexural and torsional vibratory modes.

In one embodiment, the executable modules comprise one or more step function algorithm(s) **402** stored in memory that when executed causes the processor **400** to generate a step function formed by a stepwise waveform of drive signals comprising current (I), voltage (V), and/or frequency (f) for various time intervals or periods (T). The stepwise waveforms of the drive signals may be generated by forming a piecewise linear combination of constant functions over two or more time intervals created by stepping the generator's **30** output drive current (I), voltage (V), and/or frequency (f). The drive signals may be generated either for predetermined fixed time intervals or periods (T) of time or variable time intervals or periods of time in accordance with the one or more stepped output algorithm(s) **402**. Under control of the processor **400**, the generator **30** steps (e.g., increment or decrement) the current (I), voltage (V), and/or frequency (f) up or down at a particular resolution for a predetermined period (T) or until a predetermined condition is detected, such as a change in a monitored characteristic (e.g., transducer impedance, tissue impedance). The steps can change in programmed increments or decrements. If other steps are desired, the generator **30** can increase or decrease the step adaptively based on measured system characteristics.

In operation, the user can program the operation of the generator **30** using the input device **406** located on the front panel of the generator **30** console. The input device **406** may comprise any suitable device that generates signals **408** that can be applied to the processor **400** to control the operation of the generator **30**. In various embodiments, the input device **406** includes buttons, switches, thumbwheels, keyboard, keypad, touch screen monitor, pointing device, remote connection to a general purpose or dedicated computer. In other embodiments, the input device **406** may comprise a suitable user interface. Accordingly, by way of the input device **406**, the user can set or program the current (I), voltage (V), frequency (f), and/or period (T) for programming the step function output of the generator **30**. The processor **400** then displays the selected power level by sending a signal on line **410** to an output indicator **412**.

In various embodiments, the output indicator **412** may provide visual, audible, and/or tactile feedback to the surgeon to indicate the status of a surgical procedure, such as, for example, when tissue cutting and coagulating is complete based on a measured characteristic of the ultrasonic surgical instrument **100**, e.g., transducer impedance, tissue impedance, or other measurements as subsequently

described. By way of example, and not limitation, visual feedback comprises any type of visual indication device including incandescent lamps or light emitting diodes (LEDs), graphical user interface, display, analog indicator, digital indicator, bar graph display, digital alphanumeric display. By way of example, and not limitation, audible feedback comprises any type of buzzer, computer generated tone, computerized speech, voice user interface (VUI) to interact with computers through a voice/speech platform. By way of example, and not limitation, tactile feedback comprises any type of vibratory feedback provided through the instrument housing handle assembly **68**.

In one embodiment, the processor **400** may be configured or programmed to generate a digital current signal **414** and a digital frequency signal **418**. These signals **414**, **418** are applied to a direct digital synthesizer (DDS) circuit **420** to adjust the amplitude and the frequency (f) of the current output signal **416** to the transducer **50**. The output of the DDS circuit **420** is applied to an amplifier **422** whose output is applied to a transformer **424**. The output of the transformer **424** is the signal **416** applied to the ultrasonic transducer **50**, which is coupled to the blade **79** by way of the waveguide **80** (FIG. **2**).

In one embodiment, the generator **30** comprises one or more measurement modules or components that may be configured to monitor measurable characteristics of the ultrasonic instrument **100** (FIG. **1**). In the illustrated embodiment, the processor **400** may be employed to monitor and calculate system characteristics. As shown, the processor **400** measures the impedance Z of the transducer **50** by monitoring the current supplied to the transducer **50** and the voltage applied to the transducer **50**. In one embodiment, a current sense circuit **426** is employed to sense the current flowing through the transducer **50** and a voltage sense circuit **428** is employed to sense the output voltage applied to the transducer **50**. These signals may be applied to the analog-to-digital converter **432** (ADC) via an analog multiplexer **430** circuit or switching circuit arrangement. The analog multiplexer **430** routes the appropriate analog signal to the ADC **432** for conversion. In other embodiments, multiple ADCs **432** may be employed for each measured characteristic instead of the multiplexer **430** circuit. The processor **400** receives the digital output **433** of the ADC **432** and calculates the transducer impedance Z based on the measured values of current and voltage. The processor **400** adjusts the output drive signal **416** such that it can generate a desired power versus load curve. In accordance with programmed step function algorithms **402**, the processor **400** can step the drive signal **416**, e.g., the current or frequency, in any suitable increment or decrement in response to the transducer impedance Z.

To actually cause the surgical blade **79** to vibrate, e.g., actuate the blade **79**, the user activates the foot switch **434** (FIG. **1**) or the switch **312***a* (FIG. **1**) on the handle assembly **68**. This activation outputs the drive signal **416** to the transducer **50** based on programmed values of current (I), frequency (f), and corresponding time periods (T). After a predetermined fixed time period (T), or variable time period based on a measurable system characteristic such as changes in the impedance Z of the transducer **50**, the processor **400** changes the output current step or frequency step in accordance with the programmed values. The output indicator **412** communicates the particular state of the process to the user.

The programmed operation of the generator **30** can be further illustrated with reference to FIGS. **6**, **7**, and **8**, where graphical representations of current **300**, voltage **310**, power **320**, impedance **330**, and frequency **340** are shown for the generator **30** in an unloaded state, a lightly loaded state, and a heavily loaded state, respectively. FIG. **6** is a graphical representation of current **300**, voltage **310**, power **320**, impedance **330**, and frequency **340** waveforms of one embodiment of the generator **30** in an unloaded state. In the illustrated embodiment, the current **300** output of the generator **30** is stepped. As shown in FIG. **6**, the generator **30** is initially activated at about time **0** resulting in the current **300** rising to a first set point $I_1$ of about 100 mA. The current **300** is maintained at the first set point $I_2$ for a first period $T_1$. At the end of the first period $T_1$, e.g., about 1 second in the illustrated embodiment, the current **300** set point $I_1$ is changed, e.g., stepped, by the generator **30** in accordance with the software, e.g., the step function algorithm(s) **402**, to a second set point $I_2$ of about 175 mA for a second period $T_2$, e.g., about 2 seconds in the illustrated embodiment. At the end of the second period $T_2$, e.g., at about 3 seconds in the illustrated embodiment, the generator **30** software changes the current **300** to a third set point $I_3$ of about 350 mA. The voltage **310**, current **300**, power **320**, and frequency respond only slightly because there is no load on the system.

FIG. **7** is a graphical representation of the current **300**, voltage **310**, power **320**, impedance **330**, and frequency **340** waveforms of one embodiment of the generator **30** under a lightly loaded state. Referring to FIG. **7**, the generator **30** is activated at about time **0** resulting in the current **300** rising to the first current **300** set point $I_1$ of about 100 mA. At about 1 second the current **300** set point is changed within the generator **30** by the software to $I_2$ of about 175 mA, and then again at about 3 seconds the generator **30** changes the current **300** set point to $I_3$ of about 350 mA. The voltage **310**, current **300**, power **320**, and frequency **340** are shown responding to the light load similar to that shown in FIG. **4**.

FIG. **8** is a graphical representation of the current **300**, voltage **310**, power **320**, impedance **330**, and frequency **340** waveforms of one embodiment of the generator **30** under a heavily loaded state. Referring to FIG. **8**, the generator **30** is activated at about time **0** resulting in the current **300** rising to the first set point $I_1$ of about 100 mA. At about 1 second the current **300** set point is changed within the generator **30** by the software to $I_2$ of about 175 mA, and then again at about 3 seconds the generator **30** changes the current **300** set point to $I_3$ of about 350 mA. The voltage **310**, current **300**, power **320**, and frequency **340** are shown responding to the heavy load similar to that shown in FIG. **5**.

It will be appreciated by those skilled in the art that the current **300** step function set points (e.g., $I_1$, $I_2$, $I_3$) and the time intervals or periods (e.g., $T_1$, $T_2$) of duration for each of the step function set points described in FIGS. **6-8** are not limited to the values described herein and may be adjusted to any suitable value as may be desired for a given set of surgical procedures. Additional or fewer current set points and periods of duration may be selected as may be desired for a given set of design characteristics or performance constraints. As previously discussed, the periods may be predetermined by programming or may be variable based on measurable system characteristics. The embodiments are not limited in this context.

Having described operational details of various embodiments of the surgical system **19**, operations for the above surgical system **19** may be further described in terms of a process for cutting and coagulating a blood vessel employing a surgical instrument comprising the input device **406** and the transducer impedance measurement capabilities described with reference to FIG. **9**. Although a particular process is described in connection with the operational details, it can be appreciated that the process merely pro-

vides an example of how the general functionality described herein can be implemented by the surgical system **19**. Further, the given process does not necessarily have to be executed in the order presented herein unless otherwise indicated. As previously discussed, the input device **406** may be employed to program the stepped output (e.g., current, voltage, frequency) to the ultrasonic transducer **50**/blade **79** assembly.

Accordingly, with reference now to FIGS. **1-3** and **6-9**, one technique for sealing a vessel includes separating and moving the inner muscle layer of the vessel away from the adventitia layer prior to the application of standard ultrasonic energy to transect and seal the vessel. Although conventional methods have achieved this separation by increasing the force applied to the clamp member **60**, disclosed is an alternative apparatus and method for cutting and coagulating tissue without relying on clamp force alone. In order to more effectively separate the tissue layers of a vessel, for example, the generator **30** may be programmed to apply a frequency step function to the ultrasonic transducer **50** to mechanically displace the blade **79** in multiple modes in accordance with the step function. In one embodiment, the frequency step function may be programmed by way of the user interface **406**, wherein the user can select a stepped-frequency program, the frequency (f) for each step, and the corresponding time period (T) of duration for each step for which the ultrasonic transducer **50** will be excited. The user may program a complete operational cycle by setting multiple frequencies for multiple periods to perform various surgical procedures.

In one embodiment, a first ultrasonic frequency may be set initially to mechanically separate the muscle tissue layer of a vessel prior to applying a second ultrasonic frequency to cut and seal the vessel. By way of example, and not limitation, in accordance with one implementation of the program, initially, the generator **30** is programmed to output a first drive frequency $f_1$ for a first period $T_1$ of time (for example less than approximately 1 second), wherein the first frequency $f_1$ is significantly off resonance, for example, $f_o/2$, $2f_o$ or other structural resonant frequencies, where $f_o$ is the resonant frequency (e.g., 55.5 kHz). The first frequency $f_1$ provides a low level of mechanical vibration action to the blade **79** that, in conjunction with the clamp force, mechanically separates the muscle tissue layer (subtherapeutic) of the vessel without causing significant heating that generally occurs at resonance. After the first period $T_1$, the generator **30** is programmed to automatically switch the drive frequency to the resonant frequency $f_o$ for a second period $T_2$ to transect and seal the vessel. The duration of the second period $T_2$ may be programmed or may be determined by the length of time it actually takes to cut and seal the vessel as determined by the user or may be based on measured system characteristics such as the transducer impedance Z as described in more detail below.

In one embodiment, the tissue/vessel transection process (e.g., separating the muscle layer of the vessel from the adventitia layer and transecting/sealing the vessel) may be automated by sensing the impedance Z characteristics of the transducer **50** to detect when the transection of the tissue/vessel occurs. The impedance Z can be correlated to the transection of the muscle layer and to the transection/sealing of the vessel to provide a trigger for the processor **400** to generate the frequency and/or current step function output. As previously discussed with reference to FIG. **9**, the impedance Z of the transducer **50** may be calculated by the processor **400** based on the current flowing through transducer **50** and the voltage applied to the transducer **50** while the blade **79** is under various loads. Because the impedance Z of the transducer **50** is proportional to the load applied to the blade **79**, as the load on the blade **79** increases, the impedance Z of the transducer **50** increases, and as the load on the blade **79** decreases the impedance Z of the transducer **50** decreases. Accordingly, the impedance Z of the transducer **50** can be monitored to detect the transection of the inner muscle tissue layer of the vessel from the adventitia layer and can also be monitored to detect when the vessel has been transected and sealed.

In one embodiment, the ultrasonic surgical instrument **110** may be operated in accordance with a programmed step function algorithm responsive to the transducer impedance Z. In one embodiment, a frequency step function output may be initiated based on a comparison of the transducer impedance Z and one or more predetermined thresholds that have been correlated with tissue loads against the blade **79**. When the transducer impedance Z transitions above or below (e.g., crosses) a threshold, the processor **400** applies a digital frequency signal **418** to the DDS circuit **420** to change the frequency of the drive signal **416** by a predetermined step in accordance with the step function algorithm(s) **402** responsive to the transducer impedance Z. In operation, the blade **79** is first located at the tissue treatment site. The processor **400** applies a first digital frequency signal **418** to set a first drive frequency f**1** that is off resonance (e.g., $f_o/2$, $2f_o$ or other structural resonant frequencies, where $f_o$ is the resonant frequency). The drive signal **416** is applied to the transducer **50** in response to activation of the switch **312***a* on the handle assembly **68** or the foot switch **434**. During this period the ultrasonic transducer **50** mechanically activates the blade **79** at the first drive frequency $f_1$. A force or load may be applied to the clamp member **60** and the blade **79** to facilitate this process. During this period, the processor **400** monitors the transducer impedance Z until the load on the blade **79** changes and the transducer impedance Z crosses a predetermined threshold to indicate that the tissue layer has been transected. The processor **400** then applies a second digital frequency signal **418** to set a second drive frequency $f_2$, e.g., the resonant frequency $f_o$ or other suitable frequency for transecting, coagulating, and sealing tissue. Another portion of the tissue (e.g., the vessel) is then grasped between the clamp member **60** and the blade **79**. The transducer **50** is now energized by the drive signal **416** at the second drive frequency $f_2$ by actuating either the foot switch **434** or the switch **312***a* on the handle assembly **68**. It will be appreciated by those skilled in the art that the drive current (I) output also may be stepped as described with reference to FIGS. **6-8** based on the transducer impedance Z.

According to one step function algorithm **402**, the processor **400** initially sets a first drive frequency $f_1$ that is significantly off resonance to separate the inner muscle layer of the vessel from the adventitia layer. During this period of operation the processor **400** monitors the transducer impedance Z to determine when the inner muscle layer is transected or separated from the adventitia layer. Because the transducer impedance Z is correlated to the load applied to the blade **79**, for example, cutting more tissue decrease the load on the blade **79** and the transducer impedance Z. The transection of the inner muscle layer is detected when the transducer impedance Z drops below a predetermined threshold. When the change in transducer impedance Z indicates that the vessel has been separated from the inner muscle layer, the processor **400** sets the drive frequency to the resonant frequency $f_o$. The vessel is then grasped between the blade **79** and the clamp member **60** and the transducer **50** is activated by actuating either the foot switch

or the switch on the handle assembly **68** to transect and seal the vessel. In one embodiment, the impedance Z change may range between about 1.5 to about 4 times a base impedance measurements from an initial point of contact with the tissue to a point just before the muscle layer is transected and sealed.

FIG. **10** illustrates one embodiment of a surgical system **190** comprising an ultrasonic surgical instrument **120** and a generator **500** comprising a tissue impedance module **502**. Although in the presently disclosed embodiment, the generator **500** is shown separate from the surgical instrument **120**, in one embodiment, the generator **500** may be formed integrally with the surgical instrument **120** to form a unitary surgical system **190**. In one embodiment, the generator **500** may be configured to monitor the electrical impedance of the tissue $Z_t$ and to control the characteristics of time and power level based on the tissue impedance $Z_t$. In one embodiment, the tissue impedance $Z_t$ may be determined by applying a subtherapeutic radio frequency (RF) signal to the tissue and measuring the current through the tissue by way of a return electrode on the clamp member **60**. In the embodiment illustrated in FIG. **10**, an end effector **810** portion of the surgical system **190** comprises a clamp arm assembly **451** connected to the distal end of the outer sheath **72**. The blade **79** forms a first (e.g., energizing) electrode and the clamp arm assembly **451** comprises an electrically conductive portion that forms a second (e.g., return) electrode. The tissue impedance module **502** is coupled to the blade **79** and the clamp arm assembly **451** through a suitable transmission medium such as a cable **504**. The cable **504** comprises multiple electrical conductors for applying a voltage to the tissue and providing a return path for current flowing through the tissue back to the impedance module **502**. In various embodiments, the tissue impedance module **502** may be formed integrally with the generator **500** or may be provided as a separate circuit coupled to the generator **500** (shown in phantom to illustrate this option). The generator **500** is substantially similar to the generator **30** with the added feature of the tissue impedance module **502**.

FIG. **11** illustrates one embodiment of a drive system **321** of the generator **500** comprising the tissue impedance module **502**. The drive system **321** generates the ultrasonic electrical drive signal **416** to drive the ultrasonic transducer **50**. In one embodiment, the tissue impedance module **502** may be configured to measure the impedance $Z_t$ of tissue grasped between the blade **79** and the clamp arm assembly **451**. The tissue impedance module **502** comprises an RF oscillator **506**, a voltage sensing circuit **508**, and a current sensing circuit **510**. The voltage and current sensing circuits **508**, **510** respond to the RF voltage $v_{rf}$ applied to the blade **79** electrode and the RF current $i_{rf}$ flowing through the blade **79** electrode, the tissue, and the conductive portion of the clamp arm assembly **451**. The sensed voltage $v_{rf}$ and current $i_{rf}$ are converted to digital form by the ADC **432** via the analog multiplexer **430**. The processor **400** receives the digitized output **433** of the ADC **432** and determines the tissue impedance $Z_t$ by calculating the ratio of the RF voltage $v_{rf}$ to current $i_{rf}$ measured by the voltage sense circuit **508** and the current sense circuit **510**. In one embodiment, the transection of the inner muscle layer and the tissue may be detected by sensing the tissue impedance $Z_t$. Accordingly, detection of the tissue impedance $Z_t$ may be integrated with an automated process for separating the inner muscle layer from the outer adventitia layer prior to transecting the tissue without causing a significant amount of heating, which normally occurs at resonance.

FIG. **12** illustrates one embodiment of the clamp arm assembly **451** that may be employed with the surgical system **190** (FIG. **10**). In the illustrated embodiment, the clamp arm assembly **451** comprises a conductive jacket **472** mounted to a base **449**. The conductive jacket **472** is the electrically conductive portion of the clamp arm assembly **451** that forms the second, e.g., return, electrode. In one implementation, the clamp arm **56** (FIG. **3**) may form the base **449** on which the conductive jacket **472** is mounted. In various embodiments, the conductive jacket **472** may comprise a center portion **473** and at least one downwardly-extending sidewall **474** which can extend below the bottom surface **475** of the base **449**. In the illustrated embodiment, the conductive jacket **472** has two sidewalls **474** extending downwardly on opposite sides of the base **449**. In other embodiments, the center portion **473** may comprise at least one aperture **476** which can be configured to receive a projection **477** extending from the base **449**. In such embodiments, the projections **477** can be press-fit within the apertures **476** in order to secure the conductive jacket **472** to the base **449**. In other embodiments, the projections **477** can be deformed after they are inserted into the apertures **476**. In various embodiments, fasteners can be used to secure the conductive jacket **472** to the base **449**.

In various embodiments, the clamp arm assembly **451** may comprise a non-electrically conductive or insulative material, such as plastic and/or rubber, for example, positioned intermediate the conductive jacket **472** and the base **449**. The electrically insulative material can prevent current from flowing, or shorting, between the conductive jacket **472** and the base **449**. In various embodiments, the base **449** may comprise at least one aperture **478**, which can be configured to receive a pivot pin (not illustrated). The pivot pin can be configured to pivotably mount the base **449** to the sheath **72** (FIG. **10**), for example, such that the clamp arm assembly **451** can be rotated between open and closed positions relative to the sheath **72**. In the illustrated embodiment, the base **449** includes two apertures **478** positioned on opposite sides of the base **449**. In one embodiment, a pivot pin may be formed of or may comprise a non-electrically conductive or insulative material, such as plastic and/or rubber, for example, which can be configured to prevent current from flowing into the sheath **72** even if the base **449** is in electrical contact with the conductive jacket **472**, for example. Additional clamp arm assemblies comprising various embodiments of electrodes may be employed. Examples of such clamp arm assemblies are described in commonly-owned and contemporaneously-filed U.S. patent application Ser. Nos. 12/503,769, 12/503,770, and 12/503,766, each of which is incorporated herein by reference in its entirety.

FIG. **13** is a schematic diagram of the tissue impedance module **502** coupled to the blade **79** and the clamp arm assembly **415** with tissue **514** located therebetween. With reference now to FIGS. **10-13**, the generator **500** comprises the tissue impedance module **502** configured for monitoring the impedance of the tissue **514** ($Z_t$) located between the blade **79** and the clamp arm assembly **451** during the tissue transection process. The tissue impedance module **502** is coupled to the ultrasonic surgical instrument **120** by way of the cable **504**. The cable **504** includes a first "energizing" conductor **504***a* connected to the blade **79** (e.g., positive [+] electrode) and a second "return" conductor **504***b* connected to the conductive jacket **472** (e.g., negative [−] electrode) of the clamp arm assembly **451**. In one embodiment, RF voltage $v_{rf}$ is applied to the blade **79** to cause RF current $i_{rf}$ to flow through the tissue **514**. The second conductor **504***b* provides the return path for the current $i_{rf}$ back to the tissue

impedance module **502**. The distal end of the return conductor **504***b* is connected to the conductive jacket **472** such that the current $i_{rf}$ can flow from the blade **79**, through the tissue **514** positioned intermediate the conductive jacket **472** and the blade **79**, and the conductive jacket **472** to the return conductor **504***b*. The impedance module **502** connects in circuit, by way of the first and second conductors **504***a, b*. In one embodiment, the RF energy may be applied to the blade **79** through the ultrasonic transducer **50** and the waveguide **80** (FIG. **2**). It is worthwhile noting that the RF energy applied to the tissue **514** for purposes of measuring the tissue impedance $Z_t$ is a low level subtherapeutic signal that does not contribute in a significant manner, or at all, to the treatment of the tissue **514**.

Having described operational details of various embodiments of the surgical system **190**, operations for the above surgical system **190** may be further described with reference to FIGS. **10-13** in terms of a process for cutting and coagulating a blood vessel employing a surgical instrument comprising the input device **406** and the tissue impedance module **502**. Although a particular process is described in connection with the operational details, it can be appreciated that the process merely provides an example of how the general functionality described herein can be implemented by the surgical system **190**. Further, the given process does not necessarily have to be executed in the order presented herein unless otherwise indicated. As previously discussed, the input device **406** may be employed to program the step function output (e.g., current, voltage, frequency) to the ultrasonic transducer **50**/blade **79** assembly.

In one embodiment, a first conductor or wire may be connected to the outer sheath **72** of the instrument **120** and a second conductor or wire may be connected to the blade **79**/transducer **50**. By nature of the design, the blade **79** and the transducer **50** are electrically isolated from the outer sheath **72** as well as other elements of the actuation mechanism for the instrument **120** including the base **449** and the inner sheath **76**. The outer sheath **79** and other elements of the actuation mechanism including the base **449** and the inner sheath **76** are all electrically continuous with one another—that is, they are all metallic and touch one another. Accordingly, by connecting a first conductor to the outer sheath **72** and connecting a second conductor to the blade **79** or the transducer **50** such that the tissue resides between these two conductive pathways, the system can monitor the electrical impedance of the tissue as long as the tissue contacts both the blade **79** and the base **449**. To facilitate this contact, the base **449** itself may include outwardly and possibly downwardly protruding features to assure tissue contact while, effectively integrating conductive jacket **472** into base **449**.

In one embodiment, the ultrasonic surgical instrument **120** may be operated in accordance with a programmed step function algorithm **402** responsive to the tissue impedance $Z_t$. In one embodiment, a frequency step function output may be initiated based on a comparison of the tissue impedance $Z_t$ and predetermined thresholds that have been correlated with various tissue states (e.g., desiccation, transection, sealing). When the tissue impedance $Z_t$ transitions above or below (e.g., crosses) a threshold, the processor **400** applies a digital frequency signal **418** to the DDS circuit **420** to change the frequency of an ultrasonic oscillator by a predetermined step in accordance with the step function algorithm **402** responsive to the tissue impedance $Z_t$.

In operation, the blade **79** is located at the tissue treatment site. The tissue **514** is grasped between the blade **79** and the clamp arm assembly **451** such that the blade **79** and the conductive jacket **472** make electrical contact with the tissue **514**. The processor **400** applies a first digital frequency signal **418** to set a first drive frequency $f_1$ that is off resonance (e.g., $f_o/2$, $2f_o$ or other structural resonant frequencies, where $f_o$ is the resonant frequency). The blade **79** is electrically energized by the low level subtherapeutic RF voltage $v_{rf}$ supplied by the tissue impedance module **502**. The drive signal **416** is applied to the transducer **50**/blade **79** in response to actuation of the switch **312***a* on the handle assembly **68** or the foot switch **434** until the tissue impedance $Z_t$ changes by a predetermined amount. A force or load is then applied to the clamp arm assembly **451** and the blade **79**. During this period the ultrasonic transducer **50** mechanically activates the blade **79** at the first drive frequency $f_1$ and as a result, the tissue **514** begins to desiccate from the ultrasonic action applied between the blade **79** and the one or more clamp pads **58** of the clamp arm assembly **451** causing the tissue impedance $Z_t$ to increase. Eventually, as the tissue is transected by the ultrasonic action and applied clamp force, the tissue impedance $Z_t$ becomes very high or infinite as the tissue fully transects such that no conductive path exists between the blade **79** and the conductive jacket **472**. It will be appreciated by those skilled in the art that the drive current (I) output also may be stepped as described with reference to FIGS. **6-8** based on the tissue impedance $Z_t$.

In one embodiment, the tissue impedance $Z_t$ may be monitored by the impedance module **502** in accordance with the following process. A measurable RF current **i1** is conveyed through the first energizing conductor **504***a* to the blade **79**, through the tissue **514**, and back to the impedance module **502** through the conductive jacket **472** and the second conductor **504***b*. As the tissue **514** is desiccated and cut by the ultrasonic action of the blade **79** acting against the one or more clamp pads **58**, the impedance of the tissue **514** increases and thus the current **i1** in the return path, i.e., the second conductor **504***b*, decreases. The impedance module **502** measures the tissue impedance $Z_t$ and conveys a representative signal to the ADC **432** whose digital output **433** is provided to the processor **400**. The processor **400** calculates the tissue impedance $Z_t$ based on these measured values of $v_{rf}$ and $i_{rf}$. The processor **400** steps the frequency by any suitable increment or decrement in response to changes in tissue impedance $Z_t$. The processor **400** controls the drive signals **416** and can make any necessary adjustments in amplitude and frequency in response to the tissue impedance $Z_t$. In one embodiment, the processor **400** can cut off the drive signal **416** when the tissue impedance $Z_t$ reaches a predetermined threshold value.

Accordingly, by way of example, and not limitation, in one embodiment, the ultrasonic surgical instrument **120** may be operated in accordance with a programmed stepped output algorithm to separate the inner muscle layer of a vessel from the adventitia layer prior to transecting and sealing the vessel. As previously discussed, according to one step function algorithm, the processor **400** initially sets a first drive frequency **f1** that is significantly off resonance. The transducer **50** is activated to separate the inner muscle layer of the vessel from the adventitia layer and the tissue impedance module **502** applies a subtherapeutic RF voltage $v_{rf}$ signal to the blade **79**. During this period $T_1$ of operation the processor **400** monitors the tissue impedance $Z_t$ to determine when the inner muscle layer is transected or separated from the adventitia layer. The tissue impedance $Z_t$ is correlated to the load applied to the blade **79**, for example, when the tissue becomes desiccated or when the tissue is

transected the tissue impedance $Z_t$ becomes extremely high or infinite. The change in tissue impedance $Z_t$ indicates that the vessel has been separated or transected from the inner muscle layer and the generator **500** is deactivated for a second period of time $T_2$. The processor **400** then sets the drive frequency to the resonant frequency $f_o$. The vessel is then grasped between the blade **79** and the clamp arm assembly **451** and the transducer **50** is reactivated to transect and seal the vessel. Continuous monitoring of the tissue impedance $Z_t$ provides an indication of when the vessel is transected and sealed. Also, the tissue impedance $Z_t$ may be monitored to provide an indication of the completeness of the tissue cutting and/or coagulating process or to stop the activation of the ultrasonic generator **500** when the tissue impedance $Z_t$ reaches a predetermined threshold value. The threshold for the tissue impedance $Z_t$ may be selected, for example, to indicate that the vessel has been transected. In one embodiment, the tissue impedance $Z_t$ may range between about 10 Ohms to about 1000 Ohms from an initial point to a point just before the muscle layer is transected and sealed.

The applicants have discovered that experiments that run varying current set points (both increasing and decreasing) and dwell times indicate that the described embodiments can be used to separate the inner muscle layer from the outer adventitia layer prior to completing the transection resulting in improved hemostasis and potentially lower total energy (heat) at the transection site. Furthermore, although the surgical instruments **100**, **120** have been described in regards to impedance threshold detection schemes to determine when the muscle layer is separated from the adventitia, other embodiments that do not employ any detection scheme are within the scope of the present disclosure. For example, embodiments of the surgical instruments **100**, **120** may be employed in simplified surgical systems wherein non-resonant power is applied to separate the layers for a predetermined time of approximately 1 second or less, prior to applying a resonant power to cut the tissue. The embodiments are not limited in this context.

Having described operational details of various embodiments of the surgical systems **19** (FIG. **1**) and **190** (FIG. **10**), operations for the above surgical systems **19**, **190** may be further described generally in terms of a process for cutting and coagulating tissue employing a surgical instrument comprising the input device **406** and the tissue impedance module **502**. Although a particular process is described in connection with the operational details, it can be appreciated that the process merely provides an example of how the general functionality described herein can be implemented by the surgical systems **19**, **190**. Further, the given process does not necessarily have to be executed in the order presented herein unless otherwise indicated. As previously discussed, the input device **406** may be employed to program the stepped output (e.g., current, frequency) to the ultrasonic transducer **50**/blade **79** assembly.

FIG. **14** illustrates one embodiment of a method **600** for driving an end effector coupled to an ultrasonic drive system of a surgical instrument. With reference to FIGS. **1-3**, and **6-14**, by way of example, and not limitation, the ultrasonic surgical instruments **100**, **120** may be operated in accordance with the method **600** to separate the inner muscle layer of a vessel from the adventitia layer prior to transecting and sealing the vessel. Accordingly, in various embodiments, an end effector (e.g., end effector **81**, **810**) of a surgical instrument (e.g., surgical instrument **100**, **120**) may be driven in accordance with the method **600**. A generator (e.g., generator **30**, **500**) is coupled to an ultrasonic drive system. The ultrasonic drive system comprises an ultrasonic transducer (e.g., ultrasonic transducer **50**) coupled to a waveguide (e.g., waveguide **80**) and the end effector **81** is coupled to the waveguide **80**. The ultrasonic drive system is configured to resonate at a resonant frequency (e.g., 55.5 kHz). In one embodiment, at **602**, the generator **30** generates a first ultrasonic drive signal. At **604**, the ultrasonic transducer **50** is actuated with the first ultrasonic drive signal for a first period in response to activating a switch (e.g., switch **34**) on a handle assembly (e.g., handle assembly **68**) or a foot switch (e.g., foot switch **434**) connected to the generator **30**. After the first period, at **606**, the generator **30** generates a second ultrasonic drive signal. At **608**, the ultrasonic transducer **50** is actuated with the second ultrasonic drive signal for a second period in response to activating the switch **34** on the handle assembly **68** or the foot switch **434** connected to the generator **30**. The first drive signal is different from the second drive signal over the respective first and second periods. The first and second drive signals define a step function waveform over the first and second periods.

In one embodiment, the generator **30** generates a third ultrasonic drive signal. The ultrasonic transducer **50** is actuated with the third ultrasonic drive signal for a third period. The third drive signal is different from the first second drive signals over the first, second, and third periods. The first, second, and third drive signals define a step function waveform over the first, second, and third periods. In one embodiment, generating the first, second, and third ultrasonic drive signals comprises generating a corresponding first, second, and third drive current and actuating the ultrasonic transducer **50** with the first drive current for the first period, actuating the ultrasonic transducer **50** with the second drive current for the second period, and actuating the ultrasonic transducer **50** with the third drive current for the third period.

In one embodiment, the generator **30** generates the first ultrasonic drive signal at a first frequency, which is different from the resonant frequency. The ultrasonic transducer **50** is then actuated with the first ultrasonic drive signal at the first frequency for the first period. Actuation at the first frequency provides a first level of mechanical vibration to the end effector **81** suitable for separating a first tissue from a second tissue, for example, to separate the inner muscle layer of a vessel from the adventitia layer. The generator **30** generates the second ultrasonic drive signal at the resonant frequency, e.g., 55.5 kHz, and the actuates the ultrasonic transducer **50** with the second ultrasonic drive signal at the resonant frequency for the second period subsequent to the first period. Actuation at the second, resonant frequency, provides a second level of mechanical vibration to the end effector **81** suitable for transecting and sealing the first tissue, such as the vessel, once it separated from the inner muscle layer. In one embodiment, the second ultrasonic drive signal at the resonant frequency is generated automatically by the generator **30** after the first period. In one embodiment, the first frequency is substantially different from the resonant frequency and the first period is less than about one second. For example, in one embodiment, the first frequency is defined by the following equation: $f_1=2*f_o$, wherein $f_1$ is the first frequency and $f_o$ is the resonant frequency. In another embodiment, the first frequency is defined by the following equation: $f_1=f_o/2$, wherein $f_1$ is the first frequency and $f_o$ is the resonant frequency. The first, second, and third ultrasonic drive signals are also envisioned to excite be vibratory modes of the ultrasonic transducer **50** in longitudinal, flexural, and torsional modes and harmonics thereof.

In one embodiment, the generator **30** monitors a measurable characteristic of the ultrasonic drive system and generates any one of the first and second drive signals based on the measured characteristic. For example, the generator **30** monitors the impedance Z of the ultrasonic transducer **50**. The generator **30** comprises electronic circuitry suitable for measuring the impedance of the transducer **50**. For example, a current sense circuit (e.g., current sense circuit **426**) senses the current flowing through the transducer **50** and a voltage sense circuit (e.g., voltage sense circuit **428**) senses the output voltage applied to the transducer **50**. A multiplexer (e.g., multiplexer **430**) routes the appropriate analog signal to an analog-to-digital converter (e.g., ADC **432**), whose digital output is provided to a processor (e.g., processor **400**). The processor **400** calculates the transducer impedance Z based on the measured values of current and voltage.

In one embodiment, the generator **500** comprises an impedance module (e.g., tissue impedance module **502**) to measure the impedance of a tissue portion contacting an end effector (e.g., end effector **810**). The impedance module **502** includes an RF oscillator (e.g., RF oscillator **506**) to generate a subtherapeutic RF signal. The subtherapeutic RF signal is applied to a blade (e.g., blade **79**) portion of the end effector **810**, which forms an energizing electrode. The tissue portion is grasped between the end effector **810** and a return electrode of a clamp arm assembly (e.g., clamp arm assembly **451**) and the impedance of the tissue (e.g., tissue **514**). The tissue impedance is then measured by a voltage sense circuit (e.g., voltage sense circuit **508**) and current sense circuit (e.g., current sense circuit **510**) and of the impedance module **502**. These signals are applied to the ADC **432** via the multiplexer **430**. The digital output of the ADC **432** is provided to the processor **400**, which calculates the tissue impedance Zt based on the measured values of current through the tissue and the voltage applied to the blade **79** portion of the end effector **810**.

FIGS. **15**A-C illustrate various embodiments of logic flow diagrams of **700**, **800**, **900** of operations for determining a change of state of tissue being manipulated by an ultrasonic surgical instrument and providing feedback to the user to indicate that the tissue has undergone such change of state or that there is a high likelihood that the tissue has undergone such change of state. As used herein, the tissue may undergo a change of state when the tissue is separated from other layers of tissue or bone, when the tissue is cut or transected, when the tissue is coagulated, and so forth while being manipulated with an end effector of an ultrasonic surgical instrument, such as, for example, the end effector **81**, **810** of the ultrasonic surgical instrument **100**, **120** shown in FIGS. **1** and **10**. A change in tissue state may be determined based on the likelihood of an occurrence of a tissue separation event.

In various embodiments, the feedback is provided by the output indicator **412** shown in FIGS. **9** and **11**. The output indicator **412** is particularly useful in applications where the tissue being manipulated by the end effector **81**, **810** is out of the user's field of view and the user cannot see when a change of state occurs in the tissue. The output indicator **412** communicates to the user that a change in tissue state has occurred as determined in accordance with the operations described with respect to the logic flow diagrams **700**, **800**, **900**. As previously discussed, the output indicator **412** may be configured to provide various types of feedback to the user including, without limitation, visual, audible, and/or tactile feedback to indicate to the user (e.g., surgeon, clinician) that the tissue has undergone a change of state or condition of the tissue. By way of example, and not limitation, as previously discussed, visual feedback comprises any type of visual indication device including incandescent lamps or LEDs, graphical user interface, display, analog indicator, digital indicator, bar graph display, digital alphanumeric display. By way of example, and not limitation, audible feedback comprises any type of buzzer, computer generated tone, computerized speech, VUI to interact with computers through a voice/speech platform. By way of example, and not limitation, tactile feedback comprises any type of vibratory feedback provided through the instrument housing handle assembly **68**. The change of state of the tissue may be determined based on transducer and tissue impedance measurements as previously described, or based on voltage, current, and frequency measurements in accordance with the operations described with respect to the logic flow diagrams **700**, **800**, **900** described below with respect to FIGS. **15**A-C.

In one embodiment, the logic flow diagrams **700**, **800**, **900** may be implemented as executable modules (e.g., algorithms) comprising computer readable instructions to be executed by the processor **400** (FIGS. **9**, **11**, **14**) portion of the generator **30**, **500**. In various embodiments, the operations described with respect to the logic flow diagrams **700**, **800**, **900** may be implemented as one or more software components, e.g., programs, subroutines, logic; one or more hardware components, e.g., processors, DSPs, PLDs, ASICs, circuits, registers; and/or combinations of software and hardware. In one embodiment, the executable instructions to perform the operations described by the logic flow diagrams **700**, **800**, **900** may be stored in memory. When executed, the instructions cause the processor **400** to determine a change in tissue state in accordance with the operations described in the logic flow diagrams **800** and **900** and provide feedback to the user by way of the output indicator **412**. In accordance with such executable instructions, the processor **400** monitors and evaluates the voltage, current, and/or frequency signal samples available from the generator **30**, **500** and according to the evaluation of such signal samples determines whether a change in tissue state has occurred. As further described below, a change in tissue state may be determined based on the type of ultrasonic instrument and the power level that the instrument is energized at. In response to the feedback, the operational mode of the ultrasonic surgical instrument **100**, **120** may be controlled by the user or may be automatically or semi-automatically controlled.

FIG. **15**A illustrates a logic flow diagram **700** of one embodiment of determining a change in tissue state and activating the output indicator **412** accordingly. With reference now to the logic flow diagram **700** shown in FIG. **15**A and the drive system **32** of the generator **30** shown in FIG. **9**, at **702**, the processor **400** portion of the drive system **32** samples the voltage (v), current (i), and frequency (f) signals of the generator **30**. In the illustrated embodiment, at **704**, the frequency and voltage signal samples are analyzed separately to determine the corresponding frequency inflection and/or voltage drop points. In other embodiments, the current signal samples may be separately analyzed in addition to the voltage and frequency signal samples or in place of the voltage signal samples. At **706**, the present frequency signal sample is provided to a frequency inflection point analysis module for determining a change in tissue state as illustrated in the logic flow diagram **800** in FIG. **15**B. At **708**, the present voltage signal sample is provided to a voltage drop point analysis module for determining a change in tissue state as illustrated in the logic flow diagram **900** in FIG. **15**C.

The frequency inflection point analysis module and the voltage drop point analysis module determine when a change in tissue state has occurred based on correlated empirical data associated with a particular ultrasonic instrument type and the energy level at which the instrument is driven. At **714**, the results **710** from the frequency inflection point analysis module and/or the results **712** from the voltage drop point analysis module are read by the processor **400**. The processor **400** determines **716** whether the frequency inflection point result **710** and/or the voltage drop point result **712** indicates a change in tissue state. If the results **710**, **714** do not indicate a change in tissue state, the processor **400** continues along the "No" branch to **702** and reads an additional voltage and frequency signal sample from the generator **30**. In embodiments that utilize the generator current in the analysis, the processor **400** would now also read an additional current signal sample from the generator **30**. If the results **710**, **714** indicate a sufficient change in tissue state, the processor **400** continues along the "Yes" branch to **718** and activates the output indicator **412**.

As previously discussed, the output indicator **412** may provide visual, audible, and/or tactile feedback to alert the user of the ultrasonic surgical instrument **100**, **120** that a change in tissue state has occurred. In various embodiments, in response to the feedback from the output indicator **412**, the operational mode of the generator **30**, **500** and/or the ultrasonic instrument **100**, **120** may be controlled manually, automatically, or semi-automatically. The operational modes include, without limitation, disconnecting or shutting down the output power of the generator **30**, **500**, reducing the output power of the generator **30**, **500**, cycling the output power of the generator **30**, **500**, pulsing the output power of the generator **30**, **500**, and/or outputting a high-power momentary surge from the generator **30**, **500**. The operational modes of the ultrasonic instrument in response to the change in tissue state can be selected, for example, to minimize heating effects of the end effector **81**, **810**, e.g., of the clamp pad **58** (FIGS. **1-3**), to prevent or minimize possible damage to the surgical instrument **100**, **120** and/or surrounding tissue. This is advantageous because heat is generated rapidly when the transducer **50** is activated with nothing between the jaws of the end effector **81**, **810** as is the case when a change in tissue state occurs such as when tissue has substantially separated from the end effector.

FIG. **15**B is a logic flow diagram **800** illustrating one embodiment of the operation of the frequency inflection point analysis module. At **802**, a frequency sample is received by the processor **400** from **706** of the logic flow diagram **700**. At **804**, the processor **400** calculates an exponentially weighted moving average (EWMA) for the frequency inflection analysis. The EWMA is calculated to filter out noise from the generator from the frequency samples. The EWMA is calculated in accordance with a frequency moving average equation **806** and an alpha value (α) **808**:

$$S_{tf}=\alpha Y_{tf}+(1-\alpha)S_{tf}-1 \quad (2)$$

Where:

$S_{tf}$=the current moving average of the sampled frequency signal;

$S_{tf-1}$=the previous moving average of the sampled frequency signal;

α=the smoothing factor; and

$Y_{tf}$=current data point of the sampled frequency signal.

The α value **808** may vary from about 0 to about 1 in accordance with a desired filtering or smoothing factor, wherein small α values **808** approaching about 0 provide a large amount of filtering or smoothing and large α values **808** approaching about 1 provide a small amount of filtering or smoothing. The α value **808** may be selected based on the ultrasonic instrument type and power level. In one embodiment, blocks **804**, **806**, and **808** may be implemented as a variable digital low pass filter **810** with the α value **808** determining the cutoff point of the filter **810**. Once the frequency samples are filtered, the slope of the frequency samples is calculated at **812** as:

$$\text{Frequency Slope}=\Delta f/\Delta t \quad (3)$$

The calculated Frequency Slope data points are provided to a "slow response" moving average filter **814** to calculate the EWMA moving average for the Frequency Slope to further reduce system noise. In one embodiment, the "slow response" moving average filter **814** may be implemented by calculating the EWMA for the Frequency Slope at **818** in accordance with the frequency slope moving average equation **820** and alpha value (α') **822**:

$$S'_{tf}=\alpha' Y'_{tf}+(1-\alpha')S'_{tf-1} \quad (4)$$

Where:

$S'_{tf}$=the current moving average of the frequency slope of the sampled frequency signal;

$S'_{tf-1}$=the previous moving average of the frequency slope of the sampled frequency signal;

α'=the smoothing factor; and

$Y'_{tf}$=current slope data point of the sampled frequency signal.

The α' value **822** varies from about 0 to about 1, as previously discussed with respect to digital filter block **810** in accordance with a desired filtering or smoothing factor, wherein small α' value **822** approaching 0 provide a large amount of filtering or smoothing and large α' value **822** approaching 1 provide a small amount of filtering or smoothing. The α' value **822** may be selected based on the ultrasonic instrument type and power level.

The calculated Frequency Slope data points are provided to a "fast response" filter **816** to calculate the moving average for the Frequency Slope. At **824**, the "fast response" filter **816** calculates the moving average for the Frequency Slope based on a number of data points **826**.

In the illustrated embodiment, the output of the "slow response" moving average filter **814** "Slope EWMA" is applied to a (+) input of an adder **828** and the output of the "fast response" filter **816** "Slope Avg" is applied to (−) input of the adder **828**. The adder **828** computes the difference between the outputs of the "slow response" moving average filter **814** and the "fast response" filter **816**. The difference between these outputs is compared at **830** to a predetermined limit **832**. The limit **832** is determined based on the type of ultrasonic instrument and the power level at which the particular type of ultrasonic instrument is energized at. The limit **832** value may be predetermined and stored in memory in the form of a look-up table or the like. If the difference between the "Slope EWMA" and the "Slope Avg" is not greater than the limit **832**, the processor **400** continues along the "No" branch and returns a value **834** to the results **710** block that indicates that no inflection point was found in the sampled frequency signal and, therefore, no change in tissue state was detected. However, if the difference between the "Slope EWMA" and the "Slope Avg" is greater than the limit **832**, the processor **400** continues along the "Yes" branch and determines that a frequency inflection point **836** was found and returns point index **838** to the results **710** block indicating that an inflection point was found in the sampled frequency data and, therefore, a change in tissue state was detected. As previously discussed with reference to

FIG. **15**A, if a frequency inflection point **836** is found, then, at **718** (FIG. **15**A) the processor **400** activates the change in tissue state indicator **718**.

FIG. **15**C is a logic flow diagram **900** illustrating one embodiment of the operation of the voltage drop analysis module. At **902**, a voltage sample is received by the processor **400** from **708** of the logic flow diagram **700**. At **904**, the processor **400** calculates an exponentially weighted moving average (EWMA) for the frequency inflection analysis. The EWMA is calculated to filter out noise from the generator from the frequency samples. The EWMA is calculated in accordance with a voltage moving average equation **906** and an alpha value (α) **908**:

$$S_{tv}=\alpha Y_{tv}+(1-\alpha)S_{tv-1} \quad (5)$$

Where:

$S_{tv}$=the current moving average of the sampled voltage signal;

$S_{tv-1}$=the previous moving average of the sampled voltage signal;

α=the smoothing factor; and

$Y_{tv}$=current data point of the sampled voltage signal.

As previously discussed, the α value **908** may vary from 0 to 1 in accordance with a desired filtering or smoothing factor and may be selected based on the ultrasonic instrument type and power level. In one embodiment, blocks **904**, **906**, and **908** may be implemented as a variable digital low pass filter **910** with the α value **908** determining the cutoff point of the filter **910**. Once the voltage samples are filtered, the slope of the voltage samples is calculated at **912** as:

$$\text{Voltage Slope}=\Delta v/\Delta t \quad (6)$$

The calculated Voltage Slope data points are provided to a "slow response" moving average filter **914** to calculate the EWMA moving average for the Voltage Slope to further reduce system noise. In one embodiment, the "slow response" moving average filter **914** may be implemented by calculating the EWMA for the Voltage Slope at **918** in accordance with the voltage slope moving average equation **920** and alpha value (α') **822**:

$$S'_{tv}=\alpha' Y'_{tv}+(1-\alpha')S'_{tv-1} \quad (7)$$

Where:

$S'_{tv}$=the current moving average of the voltage slope of the sampled voltage signal;

$S'_{tv-1}$=the previous moving average of the voltage slope of the sampled voltage signal;

α'=the smoothing factor; and

$Y'_{tv}$=current slope data point of the sampled voltage signal.

The α' value **922** varies from about 0 to about 1, as previously discussed with respect to digital filter block **910** in accordance with a desired filtering or smoothing factor, wherein small α' value **922** approaching about 0 provide a large amount of filtering or smoothing and large α' value **922** approaching about 1 provide a small amount of filtering or smoothing. The α' value **922** may be selected based on the ultrasonic instrument type and power level.

The calculated Voltage Slope data points are provided to a "fast response" filter **916** to calculate the moving average for the Voltage Slope. At **924**, the "fast response" filter **916** calculates the moving average for the Voltage Slope based on a number of data points **926**.

In the illustrated embodiment, the output of the "slow response" moving average filter **914** "Slope EWMA" is applied to a (+) input of an adder **928** and the output of the "fast response" filter **916** "Slope Avg" is applied to (−) input of the adder **928**. The adder **928** computes the difference between the outputs of the "slow response" moving average filter **914** and the "fast response" filter **916**. The difference between these outputs is compared at **930** to a predetermined limit **932**. The limit **932** is determined based on the type of ultrasonic instrument and the power level at which the particular type of ultrasonic instrument is energized at. The limit **932** value may be predetermined and stored in memory in the form of a look-up table or the like. If the difference between the "Slope EWMA" and the "Slope Avg" is not greater than the limit **932**, the processor **400** continues along the "No" branch and resets a counter to zero at **940**, then returns a value **934** to the results **710** block that indicates that no voltage drop point was found in the sampled voltage signals and, therefore, no change in tissue state was detected. However, if the difference between the "Slope EWMA" and the "Slope Avg" is greater than the limit **932**, the processor **400** continues along the "Yes" branch and increments a counter at **942**. At **944**, the processor **400** decides whether the counter is greater than 1, or some other predetermined threshold value for example. In other words, the processor **400** takes at least two data points in regards to the voltage drop point. If the counter is not greater than the threshold (e.g., 1 in the illustrated embodiment) the processor **400** continues along the "No" branch and returns a value **934** to the results **710** block that indicates that no voltage drop point was found in the sampled voltage signals and, therefore, no change in tissue state was detected. If the counter is greater than the threshold (e.g., 1 in the illustrated embodiment) the processor **400** continues along the "Yes" branch and determines that a voltage drop point **936** was found and returns a point index **938** to the results **712** block indicating that a voltage drop point was found in the sampled voltage signals and, therefore, a change in tissue state was detected. As previously discussed with reference to FIG. **15**A, if a voltage point **836** is found, then, at **718** (FIG. **15**A) the processor **400** activates the change in tissue state indicator **718**.

FIG. **16** illustrates one embodiment of a surgical system **1000** comprising a generator **1002** and various surgical instruments usable therewith. The generator **1002** is configurable for use with surgical devices. According to various embodiments, the generator **1002** may be configurable for use with different surgical devices of different types including, for example, the ultrasonic device **1004** and electrosurgical or RF surgical devices, such as, the RF device **1006**. Although in the embodiment of FIG. **16**, the generator **1002** is shown separate from the surgical devices **1004**, **1006**, in one embodiment, the generator **1002** may be formed integrally with either of the surgical devices **1004**, **1006** to form a unitary surgical system. The generator **1002** comprises an input device **1009** located on a front panel of the generator **1002** console. The input device **1009** may comprise any suitable device that generates signals suitable for programming the operation of the generator **1002**.

FIG. **17** is a diagram of the surgical system **1000** of FIG. **16**. In various embodiments, the generator **1002** may comprise several separate functional elements, such as modules and/or blocks. Different functional elements or modules may be configured for driving the different kinds of surgical devices **1004**, **1006**. For example, an ultrasonic generator module **1008** may drive ultrasonic devices such as the ultrasonic device **1004**. An electrosurgery/RF generator module **1010** may drive the electrosurgical device **1006**. For example, the respective modules **1008**, **1010** may generate respective drive signals for driving the surgical devices **1004**, **1006**. In various embodiments, the ultrasonic generator module **1008** and/or the electrosurgery/RF generator module **1010** each may be formed integrally with the

generator **1002**. Alternatively, one or more of the modules **1008**, **1010** may be provided as a separate circuit module electrically coupled to the generator **1002**. (The modules **1008** and **1010** are shown in phantom to illustrate this option.) Also, in some embodiments, the electrosurgery/RF generator module **1010** may be formed integrally with the ultrasonic generator module **1008**, or vice versa.

In accordance with the described embodiments, the ultrasonic generator module **1008** may produce a drive signal or signals of particular voltages, currents, and frequencies, e.g., 55,500 cycles per second (Hz). The drive signal or signals may be provided to the ultrasonic device **1004**, and specifically to the transducer **1014**, which may operate, for example, as described above. In one embodiment, the generator **1002** may be configured to produce a drive signal of a particular voltage, current, and/or frequency output signal that can be stepped with high resolution, accuracy, and repeatability.

The generator **1002** may be activated to provide the drive signal to the transducer **1014** in any suitable manner. For example, the generator **1002** may comprise a foot switch **1020** coupled to the generator **1002** via a footswitch cable **1022**. A clinician may activate the transducer **1014** by depressing the foot switch **1020**. In addition, or instead of the foot switch **1020** some embodiments of the ultrasonic device **1004** may utilize one or more switches positioned on the hand piece that, when activated, may cause the generator **1002** to activate the transducer **1014**. In one embodiment, for example, the one or more switches may comprise a pair of toggle buttons **1036***a*, **1036***b* (FIG. **16**), for example, to determine an operating mode of the device **1004**. When the toggle button **1036***a* is depressed, for example, the ultrasonic generator **1002** may provide a maximum drive signal to the transducer **1014**, causing it to produce maximum ultrasonic energy output. Depressing toggle button **1036***b* may cause the ultrasonic generator **1002** to provide a user-selectable drive signal to the transducer **1014**, causing it to produce less than the maximum ultrasonic energy output. The device **1004** additionally or alternatively may comprise a second switch (not shown) to, for example, indicate a position of a jaw closure trigger for operating jaws of the end effector **1026**. Also, in some embodiments, the ultrasonic generator **1002** may be activated based on the position of the jaw closure trigger, (e.g., as the clinician depresses the jaw closure trigger to close the jaws, ultrasonic energy may be applied).

Additionally or alternatively, the one or more switches may comprises a toggle button **1036***c* that, when depressed, causes the generator **1002** to provide a pulsed output. The pulses may be provided at any suitable frequency and grouping, for example. In certain embodiments, the power level of the pulses may be the power levels associated with toggle buttons **1036***a*, **1036***b* (maximum, less than maximum), for example.

It will be appreciated that a device **1004** may comprise any combination of the toggle buttons **1036***a*, **1036***b*, **1036***c*. For example, the device **1004** could be configured to have only two toggle buttons: a toggle button **1036***a* for producing maximum ultrasonic energy output and a toggle button **1036***c* for producing a pulsed output at either the maximum or less than maximum power level. In this way, the drive signal output configuration of the generator **1002** could be 5 continuous signals and 5 or 4 or 3 or 2 or 1 pulsed signals. In certain embodiments, the specific drive signal configuration may be controlled based upon, for example, EEPROM settings in the generator **1002** and/or user power level selection(s).

In certain embodiments, a two-position switch may be provided as an alternative to a toggle button **1036***c*. For example, a device **1004** may include a toggle button **1036***a* for producing a continuous output at a maximum power level and a two-position toggle button **1036***b*. In a first detented position, toggle button **1036***b* may produce a continuous output at a less than maximum power level, and in a second detented position the toggle button **1036***b* may produce a pulsed output (e.g., at either a maximum or less than maximum power level, depending upon the EEPROM settings).

In accordance with the described embodiments, the electrosurgery/RF generator module **1010** may generate a drive signal or signals with output power sufficient to perform bipolar electrosurgery using radio frequency (RF) energy. In bipolar electrosurgery applications, the drive signal may be provided, for example, to electrodes of the electrosurgical device **1006**, for example. Accordingly, the generator **1002** may be configured for therapeutic purposes by applying electrical energy to the tissue sufficient for treating the tissue (e.g., coagulation, cauterization, tissue welding).

The generator **1002** may comprise an input device **1045** (FIG. **16**) located, for example, on a front panel of the generator **1002** console. The input device **1045** may comprise any suitable device that generates signals suitable for programming the operation of the generator **1002**. In operation, the user can program or otherwise control operation of the generator **1002** using the input device **1045**. The input device **1045** may comprise any suitable device that generates signals that can be used by the generator (e.g., by one or more processors contained in the generator) to control the operation of the generator **1002** (e.g., operation of the ultrasonic generator module **1008** and/or electrosurgery/RF generator module **1010**). In various embodiments, the input device **1045** includes one or more of buttons, switches, thumbwheels, keyboard, keypad, touch screen monitor, pointing device, remote connection to a general purpose or dedicated computer. In other embodiments, the input device **1045** may comprise a suitable user interface, such as one or more user interface screens displayed on a touch screen monitor, for example. Accordingly, by way of the input device **1045**, the user can set or program various operating parameters of the generator, such as, for example, current (I), voltage (V), frequency (f), and/or period (T) of a drive signal or signals generated by the ultrasonic generator module **1008** and/or electrosurgery/RF generator module **1010**.

The generator **1002** may also comprise an output device **1047** (FIG. **16**), such as an output indicator, located, for example, on a front panel of the generator **1002** console. The output device **1047** includes one or more devices for providing a sensory feedback to a user. Such devices may comprise, for example, visual feedback devices (e.g., a visual feedback device may comprise incandescent lamps, light emitting diodes (LEDs), graphical user interface, display, analog indicator, digital indicator, bar graph display, digital alphanumeric display, LCD display screen, LED indicators), audio feedback devices (e.g., an audio feedback device may comprise speaker, buzzer, audible, computer generated tone, computerized speech, voice user interface (VUI) to interact with computers through a voice/speech platform), or tactile feedback devices (e.g., a tactile feedback device comprises any type of vibratory feedback, haptic actuator).

Although certain modules and/or blocks of the generator **1002** may be described by way of example, it can be appreciated that a greater or lesser number of modules

and/or blocks may be used and still fall within the scope of the embodiments. Further, although various embodiments may be described in terms of modules and/or blocks to facilitate description, such modules and/or blocks may be implemented by one or more hardware components, e.g., processors, Digital Signal Processors (DSPs), Programmable Logic Devices (PLDs), Application Specific Integrated Circuits (ASICs), circuits, registers and/or software components, e.g., programs, subroutines, logic and/or combinations of hardware and software components.

In one embodiment, the ultrasonic generator drive module **1008** and electrosurgery/RF drive module **1010** may comprise one or more embedded applications implemented as firmware, software, hardware, or any combination thereof. The modules **1008**, **1010** may comprise various executable modules such as software, programs, data, drivers, application program interfaces (APIs), and so forth. The firmware may be stored in nonvolatile memory (NVM), such as in bit-masked read-only memory (ROM) or flash memory. In various implementations, storing the firmware in ROM may preserve flash memory. The NVM may comprise other types of memory including, for example, programmable ROM (PROM), erasable programmable ROM (EPROM), electrically erasable programmable ROM (EEPROM), or battery backed random-access memory (RAM) such as dynamic RAM (DRAM), Double-Data-Rate DRAM (DDRAM), and/or synchronous DRAM (SDRAM).

In one embodiment, the modules **1008**, **1010** comprise a hardware component implemented as a processor for executing program instructions for monitoring various measurable characteristics of the devices **1004**, **1006** and generating a corresponding output control signals for operating the devices **1004**, **1006**. In embodiments in which the generator **1002** is used in conjunction with the device **1004**, the output control signal may drive the ultrasonic transducer **1014** in cutting and/or coagulation operating modes. Electrical characteristics of the device **1004** and/or tissue may be measured and used to control operational aspects of the generator **1002** and/or provided as feedback to the user. In embodiments in which the generator **1002** is used in conjunction with the device **1006**, the output control signal may supply electrical energy (e.g., RF energy) to the end effector **1032** in cutting, coagulation and/or desiccation modes. Electrical characteristics of the device **1006** and/or tissue may be measured and used to control operational aspects of the generator **1002** and/or provide feedback to the user. In various embodiments, as previously discussed, the hardware component may be implemented as a DSP, PLD, ASIC, circuits, and/or registers. In one embodiment, the processor may be configured to store and execute computer software program instructions to generate the step function output signals for driving various components of the devices **1004**, **1006**, such as the ultrasonic transducer **1014** and the end effectors **1026**, **1032**.

FIG. **18** illustrates an equivalent circuit **1050** of an ultrasonic transducer, such as the ultrasonic transducer **1014**, according to one embodiment. The circuit **1050** comprises a first "motional" branch having a serially connected inductance $L_s$, resistance $R_s$ and capacitance $C_s$ that define the electromechanical properties of the resonator, and a second capacitive branch having a static capacitance $C_o$. Drive current $I_g$ may be received from a generator at a drive voltage $V_g$, with motional current $I_m$ flowing through the first branch and current $I_g$-$I_m$ flowing through the capacitive branch. Control of the electromechanical properties of the ultrasonic transducer may be achieved by suitably controlling $I_g$ and $V_g$. As explained above, conventional generator architectures may include a tuning inductor $L_t$ (shown in phantom in FIG. **18**) for tuning out in a parallel resonance circuit the static capacitance Co at a resonant frequency so that substantially all of generator's current output $I_g$ flows through the motional branch. In this way, control of the motional branch current $I_m$ is achieved by controlling the generator current output $I_g$. The tuning inductor $L_t$ is specific to the static capacitance $C_o$ of an ultrasonic transducer, however, and a different ultrasonic transducer having a different static capacitance requires a different tuning inductor $L_t$. Moreover, because the tuning inductor $L_t$ is matched to the nominal value of the static capacitance Co at a single resonant frequency, accurate control of the motional branch current $I_m$ is assured only at that frequency, and as frequency shifts down with transducer temperature, accurate control of the motional branch current is compromised.

Embodiments of the generator **1002** do not rely on a tuning inductor $L_t$ to monitor the motional branch current $I_m$. Instead, the generator **1002** may use the measured value of the static capacitance $C_o$ in between applications of power for a specific ultrasonic surgical device **1004** (along with drive signal voltage and current feedback data) to determine values of the motional branch current $I_m$ on a dynamic and ongoing basis (e.g., in real-time). Such embodiments of the generator **1002** are therefore able to provide virtual tuning to simulate a system that is tuned or resonant with any value of static capacitance $C_o$ at any frequency, and not just at single resonant frequency dictated by a nominal value of the static capacitance $C_o$.

FIG. **19** is a simplified block diagram of one embodiment of the generator **1002** for proving inductorless tuning as described above, among other benefits. Additional details of the generator **1002** are described in commonly assigned and contemporaneously filed U.S. patent application Ser. No. 12/896,360, now U.S. Patent Application Publication No. 2011/0087256 A1, titled "Surgical Generator For Ultrasonic And Electrosurgical Devices," the disclosure of which is incorporated herein by reference in its entirety. With reference to FIG. **19**, the generator **1002** may comprise a patient isolated stage **1052** in communication with a non-isolated stage **1054** via a power transformer **1056**. A secondary winding **1058** of the power transformer **1056** is contained in the isolated stage **1052** and may comprise a tapped configuration (e.g., a center-tapped or a non-center-tapped configuration) to define drive signal outputs **1060***a*, **1060***b*, **1060***c* for outputting drive signals to different surgical devices, such as, for example, an ultrasonic surgical device **1004** and an electrosurgical device **1006**. In particular, drive signal outputs **1060***a*, **1060***c* may output a drive signal (e.g., a 420V RMS drive signal) to an ultrasonic surgical device **1004**, and drive signal outputs **1060***b*, **160***c* may output a drive signal (e.g., a 100V RMS drive signal) to an electrosurgical device **1006**, with output **1060***b* corresponding to the center tap of the power transformer **1056**. The non-isolated stage **1054** may comprise a power amplifier **1062** having an output connected to a primary winding **1064** of the power transformer **1056**. In certain embodiments the power amplifier **1062** may be comprise a push-pull amplifier. For example, the non-isolated stage **1054** may further comprise a logic device **1066** for supplying a digital output to a digital-to-analog converter (DAC) **1068**, which in turn supplies a corresponding analog signal to an input of the power amplifier **1062**. In certain embodiments the logic device **1066** may comprise a programmable gate array (PGA), a field-programmable gate array (FPGA), programmable logic device (PLD), among other logic circuits, for example. The logic device **1066**, by virtue of controlling the input of the power

amplifier **1062** via the DAC **1068**, may therefore control any of a number of parameters (e.g., frequency, waveform shape, waveform amplitude) of drive signals appearing at the drive signal outputs **1060***a*, **1060***b*, **1060***c*. In certain embodiments and as discussed below, the logic device **1066**, in conjunction with a processor (e.g., a digital signal processor discussed below), may implement a number of digital signal processing (DSP)-based and/or other control algorithms to control parameters of the drive signals output by the generator **1002**.

Power may be supplied to a power rail of the power amplifier **1062** by a switch-mode regulator **1070**. In certain embodiments the switch-mode regulator **1070** may comprise an adjustable buck regulator, for example. The non-isolated stage **1054** may further comprise a first processor **1074**, which in one embodiment may comprise a DSP processor such as an Analog Devices ADSP-21469 SHARC DSP, available from Analog Devices, Norwood, Mass., for example, although in various embodiments any suitable processor may be employed. In certain embodiments the processor **1074** may control operation of the switch-mode power converter **1070** responsive to voltage feedback data received from the power amplifier **1062** by the DSP processor **1074** via an analog-to-digital converter (ADC) **1076**. In one embodiment, for example, the DSP processor **1074** may receive as input, via the ADC **1076**, the waveform envelope of a signal (e.g., an RF signal) being amplified by the power amplifier **1062**. The DSP processor **1074** may then control the switch-mode regulator **1070** (e.g., via a pulse-width modulated (PWM) output) such that the rail voltage supplied to the power amplifier **1062** tracks the waveform envelope of the amplified signal. By dynamically modulating the rail voltage of the power amplifier **1062** based on the waveform envelope, the efficiency of the power amplifier **1062** may be significantly improved relative to a fixed rail voltage amplifier schemes.

In certain embodiments, the logic device **1066**, in conjunction with the DSP processor **1074**, may implement a direct digital synthesizer (DDS) control scheme to control the waveform shape, frequency and/or amplitude of drive signals output by the generator **1002**. In one embodiment, for example, the logic device **1066** may implement a DDS control algorithm by recalling waveform samples stored in a dynamically-updated look-up table (LUT), such as a RAM LUT, which may be embedded in an FPGA. This control algorithm is particularly useful for ultrasonic applications in which an ultrasonic transducer, such as the ultrasonic transducer **1014**, may be driven by a clean sinusoidal current at its resonant frequency. Because other frequencies may excite parasitic resonances, minimizing or reducing the total distortion of the motional branch current may correspondingly minimize or reduce undesirable resonance effects. Because the waveform shape of a drive signal output by the generator **1002** is impacted by various sources of distortion present in the output drive circuit (e.g., the power transformer **1056**, the power amplifier **1062**), voltage and current feedback data based on the drive signal may be input into an algorithm, such as an error control algorithm implemented by the DSP processor **1074**, which compensates for distortion by suitably pre-distorting or modifying the waveform samples stored in the LUT on a dynamic, ongoing basis (e.g., in real-time). In one embodiment, the amount or degree of pre-distortion applied to the LUT samples may be based on the error between a computed motional branch current and a desired current waveform shape, with the error being determined on a sample-by-sample basis. In this way, the pre-distorted LUT samples, when processed through the drive circuit, may result in a motional branch drive signal having the desired waveform shape (e.g., sinusoidal) for optimally driving the ultrasonic transducer. In such embodiments, the LUT waveform samples will therefore not represent the desired waveform shape of the drive signal, but rather the waveform shape that is required to ultimately produce the desired waveform shape of the motional branch drive signal when distortion effects are taken into account.

The non-isolated stage **1054** may further comprise an ADC **1078** and an ADC **1080** coupled to the output of the power transformer **1056** via respective isolation transformers **1082**, **1084** for respectively sampling the voltage and current of drive signals output by the generator **1002**. In certain embodiments, the ADCs **1078**, **1080** may be configured to sample at high speeds (e.g., 80 MSPS) to enable oversampling of the drive signals. In one embodiment, for example, the sampling speed of the ADCs **1078**, **1080** may enable approximately 200× (depending on frequency) oversampling of the drive signals. In certain embodiments, the sampling operations of the ADC **1078**, **1080** may be performed by a singe ADC receiving input voltage and current signals via a two-way multiplexer. The use of high-speed sampling in embodiments of the generator **1002** may enable, among other things, calculation of the complex current flowing through the motional branch (which may be used in certain embodiments to implement DDS-based waveform shape control described above), accurate digital filtering of the sampled signals, and calculation of real power consumption with a high degree of precision. Voltage and current feedback data output by the ADCs **1078**, **1080** may be received and processed (e.g., FIFO buffering, multiplexing) by the logic device **1066** and stored in data memory for subsequent retrieval by, for example, the DSP processor **1074**. As noted above, voltage and current feedback data may be used as input to an algorithm for pre-distorting or modifying LUT waveform samples on a dynamic and ongoing basis. In certain embodiments, this may require each stored voltage and current feedback data pair to be indexed based on, or otherwise associated with, a corresponding LUT sample that was output by the logic device **1066** when the voltage and current feedback data pair was acquired. Synchronization of the LUT samples and the voltage and current feedback data in this manner contributes to the correct timing and stability of the pre-distortion algorithm.

In certain embodiments, the voltage and current feedback data may be used to control the frequency and/or amplitude (e.g., current amplitude) of the drive signals. In one embodiment, for example, voltage and current feedback data may be used to determine impedance phase. The frequency of the drive signal may then be controlled to minimize or reduce the difference between the determined impedance phase and an impedance phase setpoint (e.g., 0°), thereby minimizing or reducing the effects of harmonic distortion and correspondingly enhancing impedance phase measurement accuracy. The determination of phase impedance and a frequency control signal may be implemented in the DSP processor **1074**, for example, with the frequency control signal being supplied as input to a DDS control algorithm implemented by the logic device **1066**.

In another embodiment, for example, the current feedback data may be monitored in order to maintain the current amplitude of the drive signal at a current amplitude setpoint. The current amplitude setpoint may be specified directly or determined indirectly based on specified voltage amplitude and power setpoints. In certain embodiments, control of the current amplitude may be implemented by control algorithm, such as, for example, a PID control algorithm, in the

processor **1074**. Variables controlled by the control algorithm to suitably control the current amplitude of the drive signal may include, for example, the scaling of the LUT waveform samples stored in the logic device **1066** and/or the full-scale output voltage of the DAC **1068** (which supplies the input to the power amplifier **1062**) via a DAC **1086**.

The non-isolated stage **1054** may further comprise a second processor **1090** for providing, among other things user interface (UI) functionality. In one embodiment, the UI processor **1090** may comprise an Atmel AT91SAM9263 processor having an ARM 926EJ-S core, available from Atmel Corporation, San Jose, Calif., for example. Examples of UI functionality supported by the UI processor **1090** may include audible and visual user feedback, communication with peripheral devices (e.g., via a Universal Serial Bus (USB) interface), communication with the footswitch **1020**, communication with an input device **1009** (e.g., a touch screen display) and communication with an output device **1047** (e.g., a speaker). The UI processor **1090** may communicate with the processor **1074** and the logic device **1066** (e.g., via serial peripheral interface (SPI) buses). Although the UI processor **1090** may primarily support UI functionality, it may also coordinate with the DSP processor **1074** to implement hazard mitigation in certain embodiments. For example, the UI processor **1090** may be programmed to monitor various aspects of user input and/or other inputs (e.g., touch screen inputs, footswitch **1020** inputs (FIG. **17**), temperature sensor inputs) and may disable the drive output of the generator **1002** when an erroneous condition is detected.

In certain embodiments, both the DSP processor **1074** and the UI processor **1090**, for example, may determine and monitor the operating state of the generator **1002**. For the DSP processor **1074**, the operating state of the generator **1002** may dictate, for example, which control and/or diagnostic processes are implemented by the DSP processor **1074**. For the UI processor **1090**, the operating state of the generator **1002** may dictate, for example, which elements of a user interface (e.g., display screens, sounds) are presented to a user. The respective DSP and UI processors **1074**, **1090** may independently maintain the current operating state of the generator **1002** and recognize and evaluate possible transitions out of the current operating state. The DSP processor **1074** may function as the master in this relationship and determine when transitions between operating states are to occur. The UI processor **1090** may be aware of valid transitions between operating states and may confirm if a particular transition is appropriate. For example, when the DSP processor **1074** instructs the UI processor **1090** to transition to a specific state, the UI processor **1090** may verify that requested transition is valid. In the event that a requested transition between states is determined to be invalid by the UI processor **1090**, the UI processor **1090** may cause the generator **1002** to enter a failure mode.

The non-isolated stage **1054** may further comprise a controller **1096** for monitoring input devices **1045** (e.g., a capacitive touch sensor used for turning the generator **1002** on and off, a capacitive touch screen). In certain embodiments, the controller **1096** may comprise at least one processor and/or other controller device in communication with the UI processor **1090**. In one embodiment, for example, the controller **1096** may comprise a processor (e.g., a Mega168 8-bit controller available from Atmel) configured to monitor user input provided via one or more capacitive touch sensors. In one embodiment, the controller **1096** may comprise a touch screen controller (e.g., a QT5480 touch screen controller available from Atmel) to control and manage the acquisition of touch data from a capacitive touch screen.

In certain embodiments, when the generator **1002** is in a "power off" state, the controller **1096** may continue to receive operating power (e.g., via a line from a power supply of the generator **1002**, such as the power supply **2011** discussed below). In this way, the controller **196** may continue to monitor an input device **1045** (e.g., a capacitive touch sensor located on a front panel of the generator **1002**) for turning the generator **1002** on and off. When the generator **1002** is in the power off state, the controller **1096** may wake the power supply (e.g., enable operation of one or more DC/DC voltage converters **2013** of the power supply **2011**) if activation of the "on/off" input device **1045** by a user is detected. The controller **1096** may therefore initiate a sequence for transitioning the generator **1002** to a "power on" state. Conversely, the controller **1096** may initiate a sequence for transitioning the generator **1002** to the power off state if activation of the "on/off" input device **1045** is detected when the generator **1002** is in the power on state. In certain embodiments, for example, the controller **1096** may report activation of the "on/off" input device **1045** to the processor **1090**, which in turn implements the necessary process sequence for transitioning the generator **1002** to the power off state. In such embodiments, the controller **196** may have no independent ability for causing the removal of power from the generator **1002** after its power on state has been established.

In certain embodiments, the controller **1096** may cause the generator **1002** to provide audible or other sensory feedback for alerting the user that a power on or power off sequence has been initiated. Such an alert may be provided at the beginning of a power on or power off sequence and prior to the commencement of other processes associated with the sequence.

In certain embodiments, the isolated stage **1052** may comprise an instrument interface circuit **1098** to, for example, provide a communication interface between a control circuit of a surgical device (e.g., a control circuit comprising handpiece switches) and components of the non-isolated stage **1054**, such as, for example, the programmable logic device **1066**, the DSP processor **1074** and/or the UI processor **190**. The instrument interface circuit **1098** may exchange information with components of the non-isolated stage **1054** via a communication link that maintains a suitable degree of electrical isolation between the stages **1052**, **1054**, such as, for example, an infrared (IR)-based communication link. Power may be supplied to the instrument interface circuit **1098** using, for example, a low-dropout voltage regulator powered by an isolation transformer driven from the non-isolated stage **1054**.

In one embodiment, the instrument interface circuit **198** may comprise a logic device **2000** (e.g., logic circuit, programmable logic circuit, PGA, FPGA, PLD) in communication with a signal conditioning circuit **2002**. The signal conditioning circuit **2002** may be configured to receive a periodic signal from the logic circuit **2000** (e.g., a 2 kHz square wave) to generate a bipolar interrogation signal having an identical frequency. The interrogation signal may be generated, for example, using a bipolar current source fed by a differential amplifier. The interrogation signal may be communicated to a surgical device control circuit (e.g., by using a conductive pair in a cable that connects the generator **102** to the surgical device) and monitored to determine a state or configuration of the control circuit. The control circuit may comprise a number of switches, resistors and/or diodes to modify one or more characteristics (e.g., ampli-

tude, rectification) of the interrogation signal such that a state or configuration of the control circuit is uniquely discernable based on the one or more characteristics. In one embodiment, for example, the signal conditioning circuit **2002** may comprises an ADC for generating samples of a voltage signal appearing across inputs of the control circuit resulting from passage of interrogation signal therethrough. The logic device **2000** (or a component of the non-isolated stage **1054**) may then determine the state or configuration of the control circuit based on the ADC samples.

In one embodiment, the instrument interface circuit **1098** may comprise a first data circuit interface **2004** to enable information exchange between the logic circuit **2000** (or other element of the instrument interface circuit **1098**) and a first data circuit disposed in or otherwise associated with a surgical device. In certain embodiments, for example, a first data circuit **2006** may be disposed in a cable integrally attached to a surgical device handpiece, or in an adaptor for interfacing a specific surgical device type or model with the generator **1002**. In certain embodiments, the first data circuit may comprise a non-volatile storage device, such as an electrically erasable programmable read-only memory (EEPROM) device. In certain embodiments and referring again to FIG. **19**, the first data circuit interface **2004** may be implemented separately from the logic device **2000** and comprise suitable circuitry (e.g., discrete logic devices, a processor) to enable communication between the programmable logic device **2000** and the first data circuit. In other embodiments, the first data circuit interface **2004** may be integral with the logic device **2000**.

In certain embodiments, the first data circuit **2006** may store information pertaining to the particular surgical device with which it is associated. Such information may include, for example, a model number, a serial number, a number of operations in which the surgical device has been used, and/or any other type of information. This information may be read by the instrument interface circuit **1098** (e.g., by the logic device **2000**), transferred to a component of the non-isolated stage **1054** (e.g., to logic device **1066**, DSP processor **1074** and/or UI processor **1090**) for presentation to a user via an output device **1047** and/or for controlling a function or operation of the generator **1002**. Additionally, any type of information may be communicated to first data circuit **2006** for storage therein via the first data circuit interface **2004** (e.g., using the logic device **2000**). Such information may comprise, for example, an updated number of operations in which the surgical device has been used and/or dates and/or times of its usage.

As discussed previously, a surgical instrument may be detachable from a handpiece (e.g., instrument **1024** may be detachable from handpiece **1016**) to promote instrument interchangeability and/or disposability. In such cases, conventional generators may be limited in their ability to recognize particular instrument configurations being used and to optimize control and diagnostic processes accordingly. The addition of readable data circuits to surgical device instruments to address this issue is problematic from a compatibility standpoint, however. For example, designing a surgical device to remain backwardly compatible with generators that lack the requisite data reading functionality may be impractical due to, for example, differing signal schemes, design complexity, and cost. Embodiments of instruments discussed herein address these concerns by using data circuits that may be implemented in existing surgical instruments economically and with minimal design changes to preserve compatibility of the surgical devices with current generator platforms.

Additionally, embodiments of the generator **1002** may enable communication with instrument-based data circuits. For example, the generator **1002** may be configured to communicate with a second data circuit contained in an instrument (e.g., instrument **1024** or **1034**) of a surgical device. The instrument interface circuit **1098** may comprise a second data circuit interface **2010** to enable this communication. In one embodiment, the second data circuit interface **2010** may comprise a tri-state digital interface, although other interfaces may also be used. In certain embodiments, the second data circuit may generally be any circuit for transmitting and/or receiving data. In one embodiment, for example, the second data circuit may store information pertaining to the particular surgical instrument with which it is associated. Such information may include, for example, a model number, a serial number, a number of operations in which the surgical instrument has been used, and/or any other type of information. Additionally or alternatively, any type of information may be communicated to second data circuit for storage therein via the second data circuit interface **2010** (e.g., using the logic device **2000**). Such information may comprise, for example, an updated number of operations in which the instrument has been used and/or dates and/or times of its usage. In certain embodiments, the second data circuit may transmit data acquired by one or more sensors (e.g., an instrument-based temperature sensor). In certain embodiments, the second data circuit may receive data from the generator **1002** and provide an indication to a user (e.g., an LED indication or other visible indication) based on the received data.

In certain embodiments, the second data circuit and the second data circuit interface **2010** may be configured such that communication between the logic device **2000** and the second data circuit can be effected without the need to provide additional conductors for this purpose (e.g., dedicated conductors of a cable connecting a handpiece to the generator **1002**). In one embodiment, for example, information may be communicated to and from the second data circuit using a 1-wire bus communication scheme implemented on existing cabling, such as one of the conductors used transmit interrogation signals from the signal conditioning circuit **2002** to a control circuit in a handpiece. In this way, design changes or modifications to the surgical device that might otherwise be necessary are minimized or reduced. Moreover, because different types of communications implemented over a common physical channel can be frequency-band separated, the presence of a second data circuit may be "invisible" to generators that do not have the requisite data reading functionality, thus enabling backward compatibility of the surgical device instrument.

In certain embodiments, the isolated stage **1052** may comprise at least one blocking capacitor **2096-1** connected to the drive signal output **1060***b* to prevent passage of DC current to a patient. A single blocking capacitor may be required to comply with medical regulations or standards, for example. While failure in single-capacitor designs is relatively uncommon, such failure may nonetheless have negative consequences. In one embodiment, a second blocking capacitor **2096-2** may be provided in series with the blocking capacitor **2096-1**, with current leakage from a point between the blocking capacitors **2096-1**, **2096-2** being monitored by, for example, an ADC **2098** for sampling a voltage induced by leakage current. The samples may be received by the logic circuit **2000**, for example. Based changes in the leakage current (as indicated by the voltage samples in the embodiment of FIG. **19**), the generator **1002** may determine when at least one of the blocking capacitors

2096-1, 2096-2 has failed. Accordingly, the embodiment of FIG. 19 provides a benefit over single-capacitor designs having a single point of failure.

In certain embodiments, the non-isolated stage 1054 may comprise a power supply 2011 for outputting DC power at a suitable voltage and current. The power supply may comprise, for example, a 400 W power supply for outputting a 48 VDC system voltage. The power supply 2011 may further comprise one or more DC/DC voltage converters 2013 for receiving the output of the power supply to generate DC outputs at the voltages and currents required by the various components of the generator 1002. As discussed above in connection with the controller 1096, one or more of the DC/DC voltage converters 2013 may receive an input from the controller 1096 when activation of the "on/off" input device 1045 by a user is detected by the controller 1096 to enable operation of, or wake, the DC/DC voltage converters 2013.

Having described operational details of various embodiments of the surgical systems 19 (FIG. 1), 190 (FIG. 10), 1000 (FIG. 16) operations for the above surgical systems 19, 190, 1000 may be further described generally in terms of a process for cutting and coagulating tissue employing a surgical instrument comprising an input device 406, 1009 and the generator 1002. Although a particular process is described in connection with the operational details, it can be appreciated that the process merely provides an example of how the general functionality described herein can be implemented by any one of the surgical systems 19, 190, 1000. Further, the given process does not necessarily have to be executed in the order presented herein unless otherwise indicated. As previously discussed, any one the input devices 406, 1009 may be employed to program the output (e.g., impedance, current, voltage, frequency) of the surgical devices 100 (FIG. 1), 120 (FIG. 10), 1002 (FIG. 16), 1006 (FIG. 16).

FIGS. 20-22 illustrate various embodiments of logic flow diagrams of 1200, 1300, 1400 related to a tissue algorithm for detecting when rapid heating of the ultrasonic end effector 1026 blade occurs and provide the opportunity for responding via the output indicator 412 (FIGS. 9, 11) and/or the output device 1047 (FIG. 16) (e.g., annunciation, modulation of power output and/or display of content). According to the present disclosure, when multiple reference numbers are used to described an element such as "ultrasonic surgical instrument 100, 120, 1004," it should be understood to reference any one of the elements, such as, for example, "ultrasonic surgical instrument 100," or "ultrasonic surgical instrument 120," or "ultrasonic surgical instrument 1004."

In various embodiments, feedback may be provided by the output indicator 412 shown in FIGS. 9 and 11 or the output device 1047 in FIG. 16. These feedback devices (e.g., output indicator 412, output device 1047) are particularly useful in applications where the tissue being manipulated by the end effector 81 (FIG. 1), 810 (FIG. 10), 1026 (FIG. 16) is out of the user's field of view and the user cannot see when a change of state occurs in the tissue. The feedback device communicates to the user that a change in tissue state has occurred as determined in accordance with the operations described with respect to the logic flow diagrams 700, 800, 900, 1200, 1300, 1400 as they relate to corresponding tissue algorithms. The feedback devices may be configured to provide various types of feedback according to the current state or condition of the tissue. A change of state of the tissue may be determined based on transducer and tissue measurements based on voltage, current, and frequency measurements in accordance with the operations described with respect to the logic flow diagrams 700, 800, 900 described above in connection with FIGS. 15A-C and the logic flow diagrams 1200, 1300, 1400 described below in connection with FIGS. 20-22.

In one embodiment, the logic flow diagrams 1200, 1300, 1400 may be implemented as executable modules (e.g., algorithms) comprising computer readable instructions to be executed by the processor 400 (FIGS. 9, 11, 14) portion of the generator 30, 500 or the generator 1002 (FIGS. 16, 17, 19). In various embodiments, the operations described with respect to the logic flow diagrams 1200, 1300, 1400 may be implemented as one or more than one software component, e.g., program, subroutine, logic; one or more than one hardware components, e.g., processor, DSP, PLD, PGA, FPGA, ASIC, circuit, logic circuit, register; and/or combinations of software and hardware. In one embodiment, the executable instructions to perform the operations described by the logic flow diagrams 1200, 1300, 1400 may be stored in memory. When executed, the instructions cause the processor 400, the DSP processor 1074 (FIG. 19) or logic device 1066 (FIG. 19) to determine a change in tissue state in accordance with the operations described in the logic flow diagrams 1200, 1300, and 1400 and provide feedback to the user by way of the output indicator 412 (FIGS. 9, 11) or output indicator 1047 (FIGS. 16, 17). In accordance with such executable instructions, the processor 400, DSP processor 1074, and/or logic device 1066 monitors and evaluates the voltage, current, and/or frequency signal samples available from the generator 30, 500, 1002 and according to the evaluation of such signal samples determines whether a change in tissue state has occurred. As further described below, a change in tissue state may be determined based on the type of ultrasonic instrument and the power level that the instrument is energized at. In response to the feedback, the operational mode of any one of the ultrasonic surgical instruments 100, 120, 1004 may be controlled by the user or may be automatically or semi-automatically controlled.

A brief summary of a tissue algorithm represented by way of the logic flow diagrams 1200, 1300, 1400 will now be described in connection with any one of the ultrasonic surgical instruments 100, 120, 1004 driven by a corresponding generator 30 (FIG. 1), 500 (FIG. 10), 1002 (FIG. 17). In one aspect, the tissue algorithm detects when the temperature of the blade portion (and therefore resonance) of the ultrasonic end effector 81 (FIG. 1), 810 (FIG. 10), 1026 (FIG. 17) is changing rapidly (of most interest is an increasing change). For a clamping or shears type instrument, this change may correspond to a common clinical scenario, among others, when minimal-to-no tissue, tissue debris or fluid is adjacent the blade and the blade is activated against the clamp arm, clamp pad or other suitable tissue biasing member. For non-clamping applications where an instrument with or without a clamp arm and associated mechanisms is used to effect tissue, this change corresponds to conditions where rapid heating occurs such as when the blade is activated against bone or other hard materials or when excessive force is used to couple the blade to tissue targets. These are illustrative cases; one can imagine other clinical scenarios where rapid blade heating may occur and such a tissue algorithm as described here is of benefit.

The tissue algorithm represented by the logic flow diagrams 1200, 1300, 1400 may be employed in conjunction with any of the generators 30, 500, 1002 described herein, and other suitable generators such as the GEN 04, GEN 11 generators sold by Ethicon Endo-Surgery, Inc. of Cincinnati, Ohio, and related devices, systems, that may leverage the algorithm or technology disclosed herein. Accordingly, in

the description of the tissue algorithm in conjunction with the flow diagrams **1200**, **1300**, **1400** reference is made to the generators **30**, **500**, **1002** described in connection with corresponding FIGS. **1-9**, **10-13**, and **16-19**.

Accordingly, with reference now to FIGS. **1-14**, the frequency of the blade/handpiece resonant system of any one of the ultrasonic surgical instruments **100**, **120**, **1004** is dependent on temperature. When, for example, an ultrasonic shear type end effector cuts through a clamped piece of tissue, the blade heats and thins the tissue until ultimately it cuts through the tissue. At this point, the blade resides against the tissue pad and, if clamp pressure remains between the two, the blade and pad interface will draw power via the mechanical or vibratory motion of the blade relative to the pad. The power "deposited" at the interface will be largely conducted into the blade tip as the pad material is quite insulative. It is this thermal energy that alters the stiffness of the blade tip and the system resonance will change accordingly due to these localized (to the tip) conditions. The generator **30**, **500**, **1002** tracks this resonance. The shears example illustrates one scenario for which the algorithm is of use. Additional scenarios are back-cutting with a shears device with the clamp arm closed, blade cutting against tough or hard tissue, or any scenario in which knowing the thermal condition of the blade end-effector is desired. A tissue algorithm that applies logic to this tracking of resonance and, therefore, blade tip thermal condition is now described in connection with logic flow diagrams **1200**, **1300**, **1400** in FIGS. **20-22**.

In addition, the description of the tissue algorithm described in connection with logic flow diagrams **1200**, **1300**, **1400** will be accompanied with illustrative examples via data obtained using any one of the ultrasonic surgical instruments **100**, **120**, **1004** comprising a corresponding generator **30**, **500**, **1002** described herein.

The tissue algorithm described in connection with logic flow diagrams **1200**, **1300**, **1400** relies on the monitoring of electrical drive signals, especially those correlating to the resonant frequency of the drive signal. The algorithm monitors the resonant frequency and its change with time (i.e., the first derivative of frequency with respect to time). Throughout this disclosure, this change in frequency with time is referred to as frequency slope. Frequency slope is calculated locally (from a time perspective) by calculating the change in frequency of adjacent (or relatively near) data points and dividing by the corresponding change in time. Because of signal transients, averaging or any of a multitude of applicable filtering or smoothing techniques (such that trends are more easily discernable and prevents turning on/off condition sets rapidly) may be employed. The data plots shown in FIGS. **62**, **63**, **64** illustrate the calculation of frequency slope and the use of averaging techniques (e.g., exponentially weighted moving average or EWMA) to obtain frequency slope values useful for control/monitoring. Other descriptions of frequency slope include, without limitation, "first derivative of frequency" and "frequency change with respect to time."

FIG. **20** is a logic flow diagram **1200** of a tissue algorithm that may be implemented in one embodiment of a generator **30**, **500**, **1002**. At a general level, the tissue algorithm described in connection with logic flow diagram **1200** assesses the electrical signals in real time against a set of logic conditions that correlate to events of interest (e.g., blade of ultrasonic instrument is rapidly heating). Accordingly, the generator **30**, **500**, **1002** determines when a set of logic conditions occur and triggers a corresponding set of responses. The terms "Condition Set" and "Response set" are defined follows:

(1) Condition Set—a set of logic conditions that electrical signals are monitored against in real time.

(2) Response Set—one or more responses of the generator **30**, **500**, **1002** system to a Condition Set having been met.

At **1202**, the generator **30**, **500**, **1002** is placed in an ultrasonic drive mode in a ready state.

At **1204**, the generator **30**, **500**, **1002** is activated at a predetermined power level N. When the user activates the surgical system **19**, **190**, **1000**, the corresponding generator **30**, **500**, **1002** responds by seeking the surgical system **19**, **190**, **1000** resonance and then ramping the output to the end effectors **81**, **810**, **1026** to the targeted levels for the commanded power level.

At **1206**, the tissue algorithm determines whether parameters associated with the tissue algorithm are in use by determining when at least one Condition Sets/Response Sets flag is enabled. When no such flags are enabled, the algorithm proceeds along "NO" path where at **1208** the surgical system **19**, **190**, **1000** is operated in normal ultrasonic mode and at **1210**, the corresponding generator **30**, **500**, **1002** is deactivated when the tissue procedure is completed.

When at least one flag for setting Condition Sets/Response Sets is enabled, the algorithm proceeds along "YES" path and the generator **30**, **500**, **1002** utilizes the tissue algorithm **1300** signal evaluation after resetting a Timer X and Timer X latch. In one embodiment, the at least one flag for setting Condition Sets/Response Sets may be stored in an EEPROM image of an instrument **100**, **120**, **1004** attached to the respective generator **30**, **500**, **1002**. The EEPROM flags for setting the Condition Sets/Response Sets to an enabled state are contained in TABLE 1.

TABLE 1

| Enable/Disable Flag Functions for Tissue Algorithm | | Value to Enable | Value for "Normal" |
|---|---|---|---|
| Name | Description | Function | Drive |
| Condition Set 1 Pulsing flag | If Condition Set 1 is met and this function is enabled, the generator pulses power per the pulsing parameters as a part of Response Set 1 | 1 | 0 |
| Condition Set 1 LCD display flag | If Condition Set 1 is met and this function is enabled, the generator LCD displays an assigned graphics screen as part of Response Set 1 | 1 | 0 |
| Condition Set 1 Audio flag | If Condition Set 1 is met and this function is enabled, the generator plays an assigned audio file as part of Response Set 1 | 1 | 0 |
| Condition Set 2 Pulsing flag | If Condition Set 2 is met and this function is enabled, the generator pulses power per the pulsing parameters as a part of Response Set 2 | 1 | 0 |
| Condition Set 2 LCD display flag | If Condition Set 2 is met and this function is enabled, the generator LCD displays an assigned graphics screen as part of Response Set 2 | 1 | 0 |
| Condition Set 2 Audio flag | If Condition Set 2 is met and this function is enabled, the generator plays an assigned audio file as part of Response Set 2 | 1 | 0 |

In one embodiment, the tissue algorithm **1300** signal evaluation portion of the logic flow diagram **1200** utilizes

two Condition Sets and each of these two Conditions Sets has a Response Set, which are described in more detail in connection with logic flow diagrams **1300**, **1400**. The tissue algorithm **1300** logic may be illustrated as follows: when Condition Set 1 is met, Response Set 1 is triggered. Having two condition sets enables a hierarchical response (differentiated responses based upon condition level) and also provides the ability to manage a complicated series of events.

At **1210**, responses for Condition Sets that are met are triggered. Loop **1212** is repeated until the Condition Sets are met and the generator **30**, **500**, **1002** is deactivated at **1214**.

The pulsing response is more detailed and requires further explanation than the relatively simple audio and LCD display responses. When a pulsing response is triggered, the generator **30**, **500**, **1002** drives a pulsed output as defined by the by the following four parameters:

(1) First Pulse Amplitude (EEPROM parameter, one value for each power level)—the drive amplitude for the first pulse;

(2) First Pulse Time (EEPROM parameter)—the time over which the first pulse amplitude is driven;

(3) Second Pulse Amplitude (EEPROM parameter, one value for each power level)—the drive amplitude for the second pulse; and

(4) Second Pulse Time (EEPROM parameter)—the time over which the second pulse amplitude is driven.

When driving a pulsed output, the generator **30**, **500**, **1002** drives the first pulse, then the second pulse and then repeats. The pulse amplitude may be expressed in units of: percentage of the commanded power level's output current. The commanded power level may be set by the activation switch (MIN or MAX) and the generator setting when MIN is activated.

FIG. **21** is a logic flow diagram **1300** of a signal evaluation tissue algorithm portion of the tissue algorithm shown in FIG. **20** that may be implemented in one embodiment of a generator. The tissue algorithm signal evaluation flow shown in FIG. **21** shows the application of a "time to wait" parameter **1304** and the calculation of a frequency slope (also referred to as local frequency slope because it is a running calculation).

At **1302**, the algorithm calculates the time since activation was initiated at **1204** (FIG. **20**). This time is expressed as $T_{Elapse}$, which is $T_{sytem}-T_{PowerOn}$. As previously discussed, when the user activates the surgical system **19**, **190**, **1000**, the corresponding generator **30**, **500**, **1002** responds by seeking the resonance of the ultrasonic system **100**, **120**, **1004** and then ramping the output to the corresponding end effectors **81**, **810**, **1026** to the targeted levels for the commanded power level.

During this time, the associated signal transients can make the application of algorithm logic difficult. The algorithm, therefore, utilizes the "time to wait" parameter **1304** that is stored in the EEPROM image located in a hand piece portion of the ultrasonic surgical instrument **100**, **120**, **1004**. The "time to wait" parameter **1304** (EEPROM parameter) is defined as the time at the beginning of an activation during which the generator **30**, **500**, **1002** does not apply the tissue algorithm to lessen the influence of resonance seek and drive ramp signal transients on algorithm logic. A typical "time to wait" parameter **1304** value is about 0.050 to 0.600 seconds (50 to 600 msec).

At **1306**, $T_{Elapse}$ is compared to the "time to wait" parameter **1304** value. When $T_{Elapse}$ is less than or equal to the "time to wait" parameter **1304** value, the algorithm proceeds along "NO" path to calculate at **1302** a new $T_{Elapse}$. When $T_{Elapse}$ is greater than the "time to wait" parameter **1304** value, the algorithm proceeds along "YES" path to evaluate the signal.

At **1308**, the algorithm performs the Signal Evaluation/Monitoring function. As previously stated, one aspect of the function algorithm is to monitor frequency slope. In a physical sense, frequency slope correlates to heat flux into or out of the resonant system comprising the blade and the handpiece acoustical subassembly, such as the ultrasonic systems **100**, **120**, **1004** disclosed herein. The changes in frequency and frequency slope during activation on tissue are dominated by the changing conditions occurring at the end-effector (tissue drying out, separating and blade contacting the clamp arm pad). When the blade is being heated (i.e., heat flux into the blade), the frequency slope is negative. When the blade is being cooled (i.e., heat flux out of the blade), the frequency slope is positive. Accordingly, the algorithm calculates the slope between frequency data points, i.e., incoming frequency data points **1310** ($F_t$) and previous $F_t$ data points **1312**. The calculated frequency slope also may be referred to as a local frequency slope because it is a running calculation. The local frequency slope may be referred to as $F_{Slope\_Freq}$, $F_t$, which is the frequency slope ($F_{Slope\_Freq}$) at the resonance frequency ($F_t$). The local frequency slope may be routed to a Condition Set 1, Condition Set 2 1400, for example, for evaluation in accordance with the flow diagram **1400** shown in FIG. **22**.

FIG. **22** is a logic flow diagram **1400** for evaluating condition sets for the signal evaluation tissue algorithm shown in FIG. **21** that may be implemented in one embodiment of a generator. The logic flow diagram **1400** evaluates Condition Set X, where X is either 1 or 2, for example.

In accordance with the tissue algorithm, at **1402**, the local frequency slope calculated at **1308** (FIG. **21**) is compared against a frequency slope threshold parameter **1404** value for Condition Set X at Power Level N. The frequency slope threshold parameters **1404** may be stored in an EEPROM located in the attached instrument **100**, **120**, **1004**, where one EEPROM parameter value is stored for each power level. When the local frequency slope calculated at **1308** drops below the frequency slope threshold parameter **1404** value, a first Response Set may be triggered at **1210** (FIG. **20**). When the blade is being heated at a relatively rapid rate, the frequency slope will become more negative and the tissue algorithm identifies this condition by way of the frequency slope dropping below the frequency slope threshold parameter **1404** value. Again, the frequency slope indicates the rate of thermal change or heat flux into or out of the blade.

In accordance with the tissue algorithm, also at **1402**, the resonant frequency is compared against a frequency threshold parameter **1406** value for Condition set X. The frequency threshold parameter **1406** value may be stored in an EEPROM located in the attached instrument **100**, **120**, **1004**. When the resonant frequency drops below the threshold frequency parameter **1406** value, a second Response Set may be triggered at **1210** (FIG. **20**). As a blade is continually heated, the frequency will continue to drop. A frequency threshold parameter **1406** value is intended to improve algorithm robustness by providing additional information about the thermal condition of the blade (in addition to the more dynamic indicator, the frequency slope). Frequency drop from some known condition such as room temperature gives a good indication of the thermal state of the resonant system relative to these known thermal conditions.

At **1402**, when the frequency slope ($F_{Slope\_Freq}$) is less than the frequency slope threshold parameter **1404** value and the resonant frequency ($F_t$) is less than the frequency thresh-

old parameter **1406** value, the algorithm proceeds along "YES" path to **1408** to increment a Timer X (where X corresponds to the particular Condition Set being evaluated by the tissue algorithm).

In comparing the electrical signals, e.g., the frequency slope ($F_{Slope\_Freq}$) and the resonant frequency ($F_t$), against respective thresholds parameters **1404**, **1406**, borderline conditions where the signal bounces back-and-forth across the threshold can be taken into consideration as follows. In one aspect, the tissue algorithm employs a "required time before trigger" parameter **1412** value (which also may be stored in the instrument EEPROM) for the particular Condition Set X to account for this consideration. The "required time before trigger" parameter **1412** value is defined as the time required before trigger (EEPROM parameter)—required time for frequency slope and/or frequency to be less than their respective thresholds for a Response Set to be triggered. This is intended to prevent rapid "back and forth" triggering of a response. It may be useful, however, to track non-rapid "back and forth" triggering, which may occur.

Thus, at **1414** the algorithm determines whether the Timer X value is greater than the "required time before trigger" parameter **1412** value for Condition Set X. When the Timer X value is greater than the "required time before trigger" parameter **1412** value, the algorithm proceeds along "YES" path to set a latch for Condition Set X at **1416**. Output **1418** indicates that the Condition Set X is met. When the Timer X value is less than or equal to the "required time before trigger" parameter **1412** value, the algorithm proceeds along "NO" path to indicate at output **1420** that the Condition Set X is not met.

At **1402**, when either the frequency slope ($F_{Slope\_Freq}$) greater than or equal to the frequency slope threshold parameter **1404** value or the resonant frequency ($F_t$) is greater than then or equal to the frequency threshold parameter **1406** value, the algorithm proceeds along "NO" path to reset the Timer X at **1410** (where X corresponds to the particular Condition Set being evaluated by the tissue algorithm).

For additional robustness, two latching parameters are employed by the algorithm. Without the use of latching, the algorithm is configured to end a response set when either (a) the system is deactivated or (b) when the signal or signals are no longer below their respective thresholds. Two latching parameters can be utilized. They are a "minimum latch time" parameter **1422** and a "cross-back frequency slope threshold" parameter **1424**. These latch parameters **1422**, **1424** are important for robustness around: (a) clamp arm pad surfaces that become more lubricious with elevated temperature and (b) pulsing output where signal transients at the pulse transitions are expected.

The minimum latch time parameter **1422** (EEPROM parameter) can be defined as the minimum amount of time for response(s) to a Condition Set X to be triggered. Considerations for minimum latch time include: (a) the length of time required to play a triggered audible response (e.g., in one embodiment, a "pre-alert" WAV audio file may be about 0.5 seconds long), (b) the typical (about 0.5 to 1.0 sec) or extreme (about 1.5 to 2.0 sec) user response times for an event, or (c) the typical tissue re-grasp time for a multi-cut (known as "marching") application (about 1.1-2.0 seconds with a mean of about 1.6 seconds).

The cross-back frequency slope threshold parameter **1424** (EEPROM parameter) can be defined as the frequency slope threshold above which a triggered response stops (i.e., is no longer triggered). This provides for a higher "cross-back-over" frequency slope threshold that is tasked with distinguishing between activating against the pad and jaw opened (versus distinguishing between activating on tissue and activating on the pad).

In accordance with the tissue algorithm portion represented by logic flow diagram **1400**, after the Timer X is reset at **1410**, at **1426**, the tissue algorithm determines whether either the latch for Condition Set X or the Cross-back Frequency Slope Latch is set. When both latches are not set, the algorithm proceeds along "NO" to indicate at output **1420** that the Condition Set X is not met. When either one of the latches is set, the algorithm proceeds along "YES" path to **1428**.

At **1428**, the algorithm determines whether the Latched Time for Condition Set X is greater than the minimum latch time parameter **1422** value for Condition Set X and whether the frequency slope ($F_{Slope\_Freq}$) is greater than the cross-back frequency slope threshold parameter **1424** value the algorithm proceeds along "YES" path to reset the Latch for Timer X at **1430** and to indicate at output **1420** that the Condition Set X is not met. When the Latched Time for Condition Set X is less than or equal to the minimum latch time parameter **1422** value for Condition Set X and the frequency slope ($F_{Slope\_Freq}$) less than or equal to the cross-back frequency slope threshold parameter **1424** value the algorithm proceeds along "NO" path to indicate at output **1432** that the Condition Set X is met.

As shown in FIGS. **21** and **22**, there are two identical Condition Sets 1 and 2 from a flow perspective. These Conditions Sets 1 and 2 have replicate sets of parameters as contained in TABLE 2. Algorithm parameters that are shared by the Condition Sets 1 and 2 are contained in TABLE 3.

TABLE 2 contains a summary of the replicated algorithm EEPROM parameters for each of the Condition Sets and the number parameters per Condition Set.

TABLE 2

Algorithm EEPROM Parameter Summary, Replicated Parameters for Each of the Condition Sets

| Replicated Parameters for Each of the Condition Sets | # of Parameters per Condition Set |
|---|---|
| Required time before triggered | 1 |
| Minimum latch time | 1 |
| Frequency Slope Thresholds (one for each power level) | 5 |
| Frequency Threshold | 1 |

TABLE 3 contains a summary of the shared algorithm EEPROM parameters for each of the Condition Sets (not replicated) and the number parameters.

TABLE 3

Algorithm EEPROM Parameter Summary, Common Parameters to all Condition Sets

| Parameters Shared by Condition Sets (not replicated) | # of Parameters |
|---|---|
| Time to wait | 1 |
| Cross-back Frequency Slope Threshold | 1 |
| First Pulse Amplitudes (one for each power level) | 5 |
| First Pulse Time | 1 |
| Second Pulse Amplitudes (one for each power level) | 5 |
| Second Pulse Time | 1 |

For clarity of disclosure, the tissue algorithm described in connection with the logic flow diagrams **1200**, **1300**, **1400** shown in respective FIGS. **20-22** will now be described in terms of four examples. The basic application of the tissue algorithm includes the monitoring of frequency slope, resonant frequency, or both against their respective thresholds. Accordingly, a first example includes the monitoring of frequency slope against its respective threshold and is illustrated in FIGS. **23-28**. A second example includes the monitoring of resonant frequency against its respective threshold and is illustrated in FIGS. **29-31**. A third example includes the monitoring both the frequency slope and the resonant frequency, against their respective threshold and is illustrated in FIGS. **32-34**. Finally, a fourth example also includes the monitoring both of the frequency slope and the resonant frequency, against their respective threshold.

Example 1: Monitoring Frequency Slope Against Respective Threshold

A first example case includes the monitoring of frequency slope against a respective threshold is illustrated with reference to FIGS. **23-28**. The first example, and most simple, is the example of triggering a Response Set based only on the frequency slope. TABLE 4 contains representative parameters for this objective for surgical instruments such as any one of the surgical instruments **19**, **190**, **1000** disclosed herein comprising a corresponding ultrasonic instrument such as ultrasonic instruments **100**, **120**, **1004** disclosed herein.

TABLE 4

Representative Parameters for Triggering an Audio Indication by Frequency Slope Threshold Only (one Condition Set utilized)

| Parameter | Value* |
|---|---|
| Condition Set 1 Pulsing flag | 0 |
| Condition Set 1 LCD display flag | 0 |
| Condition Set 1 Audio flag | 1 |
| Required time before triggered, Condition Set 1 | 50 msec |
| Minimum latch time, Condition Set 1 | 0 msec* |
| Frequency Slope Thresholds (one for each power level), Condition Set 1 | level 5: −0.060 kHz/sec<br>level 4: −0.053 kHz/sec<br>level 3: −0.045 kHz/sec<br>level 2: −0.038 kHz/sec<br>level 1: −0.030 kHz/sec |
| Frequency Threshold, Condition Set 1 | 56,000 Hz* |
| Time to wait | 100 msec |
| Cross-back Frequency Slope Threshold | −0.020 kHz/sec |
| First Pulse Amplitudes (one for each power level) | N/A |
| First Pulse Time | N/A |
| Second Pulse Amplitudes (one for each power level) | N/A |
| Second Pulse Time | N/A |

*These parameter values are set to an appropriate extreme such that they do not effectively take part in the logic flow (e.g., set to always be "true").

FIGS. **23-25** show signal data produced by a generator with the representative/illustrative parameters contained in TABLE 4. The generator may be similar to any one of the generators **30**, **500**, **1002** disclosed herein, which forms a portion of the respective surgical systems **19**, **190**, **1000** operating in ultrasonic mode (e.g., ultrasonic system **19**, **190**, **1000**) applied on tissue in accordance with the present disclosure.

The use of only the frequency slope to trigger a Response Set may be further demonstrated in the "burn-in" scenario or test. FIGS. **26-28** show signal data produced by a generator with the representative/illustrative parameters contained in TABLE 4 during a "burn-in" scenario or test. A "burn-in" simulates the use case where a user activates a shears type ultrasonic surgical instrument without intervening tissue (e.g., back-cutting with jaws closed). This test also may be useful for quantifying device characteristics, such as, for example, "response time."

The response time of an ultrasonic instrument may be defined as the time required for an ultrasonic system (instrument, handpiece, and generator with tissue algorithm) to respond to the clamp arm pad coming into contact with the blade. The ultrasonic system is usually initially activated "in-air" (i.e., unloaded), the clamp arm is closed against the blade and held for a period of time and then the clamp arm is opened and the ultrasonic system is deactivated. The response time is the time between the point at which the quiescent power (power in-air) begins to change due to the clamp arm pad initiating contact with the blade and the point at which the Response Set is triggered. This is also a test that enables quantification of the rate of cooling—the higher the rate of cooling (assuming similar convective boundary conditions) the more thermal energy or residual heat there is in the blade. The rate of cooling is proportional to the frequency slope (to reinforce: a positive frequency slope value correlates to the instantaneous heat flux out of the blade). As will be detailed later, the rate of cooling also may be monitored and used for control purposes so that, for example, if the rate of cooling as defined by a positive frequency slope is greater than a threshold value, one knows that the blade is "carrying" a large amount of thermal energy and is dissipating it rapidly.

FIG. **23** is a graphical representation **1500** of frequency slope versus time of a waveform **1502** of one embodiment of a generator during a typical tissue cut. Frequency slope (kHz/sec) is shown along the vertical axis and time (Sec) is shown along the horizontal axis for a typical tissue cut using any one of the ultrasonic systems comprising corresponding ultrasonic surgical instruments set on power level 5. The frequency slope threshold **1504** used for this application was −0.06 kHz/sec and is shown by the horizontal dashed line. The vertical dash-dot line **1506** shows the time (2.32 seconds) that the tissue began to separate, and the vertical dashed line **1508** shows the time (2.55 seconds) at which the ultrasonic system triggered a Response Set (in this case, per TABLE 4, an audible sound only).

FIG. **23**A is a graphical representation of a second time derivative of frequency (slope of frequency slope) versus time waveform **1503** (shown in dashed line) superimposed over the waveform **1502** shown in FIG. **23** of one embodiment of a generator during a typical tissue cut.

FIG. **24** is a graphical representation **1510** of frequency versus time waveform **1512** of one embodiment of a generator during a typical tissue cut as it relates to the graphical representation **1500** shown in FIG. **23**. Resonant frequency (kHz) is shown along the vertical axis and time (Sec) is shown along the horizontal axis for the typical tissue cut using any one of the ultrasonic systems set on power level 5. The vertical dash-dot line **1506** shows the time (2.32 seconds) that the tissue began to separate, and the vertical dashed line **1508** shows the time (2.55 seconds) at which the ultrasonic system triggered a Response Set (in this case, an audible sound only).

FIG. **25** is a graphical representation **1514** of power consumption versus time waveform **1514** of one embodiment of a generator during a typical tissue cut as it relates to the graphical representation **1500** shown in FIG. **23**. Power (W) is shown along the vertical axis and time (Sec) is shown along the horizontal axis for the typical tissue cut using any one of the ultrasonic systems set on power level 5. The

vertical dash-dot line **1506** shows the time (2.32 seconds) that the tissue began to separate, and the vertical dashed line **1508** shows the time (2.55 seconds) at which the ultrasonic system triggered a Response Set (in this case, an audible sound only).

FIG. **26** is a graphical representation **1516** of frequency slope versus time waveform **1518** of one embodiment of a generator during a burn-in test. The parameters for this test are consistent with those contained in TABLE 4. Frequency slope (kHz/sec) is shown along the vertical axis and time (Sec) is shown along the horizontal axis for a typical tissue cut using any one of the ultrasonic systems set on power level 5. The frequency slope threshold **1504** used for this application was −0.06 kHz/sec as is shown by the horizontal dashed line. The vertical dotted line **1524** shows the point in time (2.49 seconds) that the quiescent power begins to change due to clamping, the vertical dash-dot line **1506** shows the time (2.66 seconds) at which power has completed ramp-up, and the vertical dashed line **1508** shows the time (2.72 seconds) that the ultrasonic system triggered a Response Set (in this case, an audible sound only). As shown in the graphical representation **1516**, the frequency slope at **1520** correlates to the rate of cooling or heat flux out of the blade. Also, the response time **1522** of the ultrasonic system is measured as the time lapse between the point in time (2.49 seconds) that the quiescent power begins to change due to clamping and the time (2.72 seconds) that the ultrasonic system triggered a Response Set.

FIG. **27** is a graphical representation **1524** of a frequency versus time waveform **1526** of one embodiment of a generator during a burn-in test as it relates to the graphical representation **1516** shown in FIG. **26**. Resonant frequency (kHz) is shown along the vertical axis and time (Sec) is shown along the horizontal axis for the typical tissue cut using any one of the ultrasonic systems set on power level 5.

FIG. **28** is a graphical representation **1528** of a power consumption versus time waveform **1530** of one embodiment of a generator during a burn-in test as it relates to the graphical representation **1516** shown in FIG. **26**. Power (W) is shown along the vertical axis and time (Sec) is shown along the horizontal axis for the typical tissue cut using any one of the ultrasonic systems set on power level 5.

### Example 2: Triggering a Response Set Based Only on the Frequency Threshold

A second example case includes triggering a Response Set based only on the frequency threshold with reference to FIGS. **29-35**. TABLE 5 contains representative parameters for this objective in connection with surgical instruments such as any one of the surgical instruments **19**, **190**, **1000** disclosed herein comprising corresponding ultrasonic instruments such as the ultrasonic instrument **100**, **120**, **1004** disclosed herein. It will be appreciated that triggering via frequency threshold may be of limited utility as it is less indicative of dynamic end-effector conditions and is presented herein for completeness of disclosure. The inclusion of frequency slope in the tissue algorithm discussed in connection with logic flow diagrams **1200**, **1300**, **1400** is intended for use in combination logic (combined with use of the frequency slope threshold) which is covered in the next section of this specification.

TABLE 5

Representative Parameters for Triggering an Audio Indication by Frequency Threshold Only (one Condition Set utilized)

| Parameter | Value* |
|---|---|
| Condition Set 1 Pulsing flag | 0 |
| Condition Set 1 LCD display flag | 0 |
| Condition Set 1 Audio flag | 1 |
| Required time before triggered, Condition Set 1 | 50 msec |
| Minimum latch time, Condition Set 1 | 0 msec* |
| Frequency Slope Thresholds (one for each power level), Condition Set 1 | level 5: 1.00 kHz/sec*<br>level 4: 1.00 kHz/sec*<br>level 3: 1.00 kHz/sec*<br>level 2: 1.00 kHz/sec*<br>level 1: 1.00 kHz/sec* |
| Frequency Threshold, Condition Set 1 | 55,100 Hz |
| Time to wait | 100 msec |
| Cross-back Frequency Slope Threshold | −1.00 kHz/sec* |
| First Pulse Amplitudes (one for each power level) | N/A |
| First Pulse Time | N/A |
| Second Pulse Amplitudes (one for each power level) | N/A |
| Second Pulse Time | N/A |

*These parameter values are set to an appropriate extreme such that they do not effectively take part in logic flow (e.g., set to always be "true")

FIGS. **29-34** show waveforms produced by a generator with the representative/illustrative parameters contained in TABLE 5. The generator may be similar to any one of the generators **30**, **500**, **1002** disclosed herein, which forms a portion of the respective surgical systems **19**, **190**, **1000** operating in ultrasonic mode (e.g., ultrasonic system **19**, **190**, **1000**) applied on tissue in accordance with the present disclosure.

The selection of 55,100 Hz as the frequency threshold in TABLE 5 was based on test data for two abuse cases: (1) where an ultrasonic instrument is activated against the tissue pad for a prolonged period of time; and (2) where an ultrasonic instrument is used to make 10 successive cuts on excised porcine jejunum tissue as quickly as possible while keeping the generator running throughout. Each of these two abuse cases will be discussed in more detail with reference to respective FIG. **29** and FIGS. **30-31**A-C.

FIG. **29** is a graphical representation **1600** of frequency change **1602** over time of waveforms of several generators during a burn-in test. Frequency change (kHz) after X seconds of burn-in is shown along the vertical axis and ultrasonic surgical instrument device number is shown along the horizontal axis. FIG. **29** shows frequency change data after prolonged burn-ins of an ultrasonic surgical instrument where the ultrasonic surgical instrument is activated against the tissue pad for a prolonged period of time (a prolonged burn-in). The selection of 55,100 Hz limits this condition to no more than a 4 second time span or a frequency drop of about a 700 Hz from a nominal room temperature resonant frequency of 55,800 Hz. Frequency change data **16021**, **16022**, **16023**, **16024** was pulled from the generator **30**, **500**, **1002** data at corresponding 1, 2, 3, and 4 seconds into the burn-in. The nominal start frequency for the five ultrasonic surgical instruments was 55.8 kHz (blades started at room temperature). The second and fifth devices did not run long enough to generate a full set of data for all times.

FIG. **30** is a graphical representation **1604** of normalized combined impedance, current, and frequency versus time waveforms of and power consumption, energy supplied, and temperature for one embodiment of a generator coupled to a corresponding ultrasonic instrument used to make 10 successive cuts on tissue (e.g., on excised porcine jejunum tissue) as quickly as possible while keeping the generator

running throughout. This data and the methods used to obtain it represent abusive use conditions.

The representative data in FIG. **30** is shown more clearly with reference to FIGS. **31**A-C. FIG. **31**A is a graphical representation **1606** of impedance versus time waveform **1608** and current versus time waveform **1610** of one embodiment of a generator during successive tissue cuts over a period of time. Impedance (Ohm) and Current (mA) are shown along the vertical axis and time (Sec) along the horizontal axis.

FIG. **31**B is a graphical representation **1612** of resonant frequency waveform **1614** versus time of a signal of one embodiment of a generator during successive tissue cuts over a period of time. Resonant frequency (kHz) is shown along the vertical axis and time (Sec) along the horizontal axis.

FIG. **31**C is a graphical representation **1616** of a power waveform **1618**, energy waveform **1620**, and temperature waveform **1622** versus time of one embodiment of a generator during successive tissue cuts over a period of time. Power (W), Energy (J), and Temp (C) are shown along the horizontal axis and time (Sec) along the horizontal axis.

Accordingly, with reference now to FIGS. **31**A-C, as shown in the graphical representation **1612**, it can be seen that after the resonant frequency curve **1614** has dropped 700 Hz (from 55.8 kHz to 55.1 kHz) at **1615** on the third cut (which is a particularly abusive cut wherein the tissue was tip loaded. After the resonance frequency waveform **1614** has dropped 700 Hz (from 55.8 kHz to 55.1 kHz) on the third cut, the ultrasonic instrument begins to saturate the generator and the current waveform **1610** dips slightly in all successive cuts. Since the drive current waveform **1610** is proportional to blade tip displacement, a dipping current waveform **1610** results in slower speed of tissue effect and therefore a lower energy deposition rate (and lower rate of heating, i.e., frequency slope is less negative). Management of this change due to dipping current waveform **1610** within an application sequence is possible using both frequency change and frequency slope change as will be described in connection with Examples 3 and 4 in subsequent sections of this specification.

FIG. **32** is a combined graphical representation **1630** of a frequency waveform **1632**, weighted frequency slope waveform **1634** (calculated via exponentially weighted moving average with an alpha value of 0.1), and temperature waveform **1636** versus time generated by a generator similar to one embodiment of the generators described herein. The ultrasonic system had a room temperature resonant frequency (longitudinal mode) slightly higher than that for which TABLE 5 was constructed. Therefore, the frequency threshold **1633** was increased accordingly from the 55,100 Hz shown in TABLE 5 to about 55,200 Hz shown in FIG. **33** as indicated by the dashed line. The activation was performed on tissue (e.g., on excised porcine jejunum tissue) with an ultrasonic system having a room temperature resonance of about 55.9 kHz set on power level 5. Tissue separation occurs at 6.25 seconds; one side of the tissue separates from the blade at about 8 seconds; and full separation occurs at about 10 seconds. FIG. **33** is a graphical representation of a frequency versus time waveform **1632** of one embodiment of a generator **30**, **500**, **1002**. Frequency (kHz) is shown along the vertical axis and Time (Sec) is shown along the horizontal axis. FIG. **33** shows the example of using a frequency threshold **1633** only using parameters consistent with those shown in TABLE 5, but adjusted to about 55,200 Hz as indicated by the dashed line **1633**. The resonant frequency **1632** crosses the frequency threshold **1633** (dashed horizontal line—set at 700 Hz below room temperature resonance) at about 11 seconds and a Response Set may be triggered at this time.

FIG. **34** is a graphical representation **1634** of weighted frequency slope versus time waveform **1634** of one embodiment of a generator. Weighted frequency slope (kHz/Sec) is shown along the vertical axis and Time (Sec) is shown along the horizontal axis. The frequency slope waveform **1634** is calculated via exponentially weighted moving average with an alpha value of 0.1. In FIG. **34**, the frequency slope waveform **1634** crosses the frequency slope threshold **1635** (dashed horizontal line) and a Response Set may be triggered at about 5.8 seconds.

The remaining Examples 3 and 4 relate to the use of multiple Condition Sets, which require a more complex application of the tissue algorithm and includes the monitoring of frequency slope and/or frequency against their respective thresholds and may include a hierarchical approach to triggering response sets.

### Example 3: Triggering a Response Set Based on Both the Frequency Slope Threshold and the Frequency Threshold

A third example case includes triggering a Response Set based on both the frequency slope threshold and the frequency threshold. TABLE 6 contains representative parameters for this objective in connection with surgical instruments such as any one of the surgical instruments **19**, **190**, **1000** disclosed herein comprising corresponding ultrasonic instruments such as the ultrasonic instruments **100**, **120**, **1004** disclosed herein.

TABLE 6

Representative Parameters for Triggering Audio Indications by Frequency Slope and Frequency Thresholds (two Condition Sets utilized)

| Parameter | Value* |
|---|---|
| Condition Set 1 Pulsing flag | 0 |
| Condition Set 1 LCD display flag | 0 |
| Condition Set 1 Audio flag | 1 |
| Condition Set 2 Pulsing flag | 0 |
| Condition Set 2 LCD display flag | 0 |
| Condition Set 2 Audio flag | 1 |
| Required time before triggered, Condition Set 1 | 50 msec |
| Minimum latch time, Condition Set 1 | 0 msec* |
| Frequency Slope Thresholds (one for each power level), Condition Set 1 | level 5: −0.060 kHz/sec<br>level 4: −0.053 kHz/sec<br>level 3: −0.045 kHz/sec<br>level 2: −0.038 kHz/sec<br>level 1: −0.030 kHz/sec |
| Frequency Threshold, Condition Set 1 | 56,000 Hz* |
| Required time before triggered, Condition Set 2 | 50 msec |
| Minimum latch time, Condition Set 2 | 0 msec* |
| Frequency Slope Thresholds (one for each power level), Condition Set 2 | level 5: 1.00 kHz/sec*<br>level 4: 1.00 kHz/sec*<br>level 3: 1.00 kHz/sec*<br>level 2: 1.00 kHz/sec*<br>level 1: 1.00 kHz/sec* |
| Frequency Threshold, Condition Set 2 | 55,100 Hz |
| Time to wait | 100 msec |
| Cross-back Frequency Slope Threshold | −0.020 kHz/sec |
| First Pulse Amplitudes (one for each power level) | N/A |
| First Pulse Time | N/A |
| Second Pulse Amplitudes (one for each power level) | N/A |
| Second Pulse Time | N/A |

*These parameter values are set to an appropriate extreme such that they do not effectively take part in logic flow (e.g. set to always be "true")

In this case of Example 3, a tiered or hierarchical response is demonstrated. The combined logic of the frequency slope

threshold and the frequency threshold will be illustrated using the same graphical representations shown in FIGS. **32-34**. In FIG. **34**, Condition Set 1 is triggered by the frequency slope waveform **1634** crossing the frequency slope threshold **1635** value at about 6 seconds. The Response Set for Condition Set 1 may include a low level audible indicator, for example. As the user continues to activate the instrument with minimal intervening tissue, Condition Set 2 is triggered as the resonant frequency drops below the frequency threshold **1633** at about 11 seconds as shown in FIG. **33**. The Response Set for Condition Set 2 may be an elevated audible indicator, for example.

Example 4: Triggering a Response Set Based on Both the Frequency Slope Threshold and the Frequency Threshold

A fourth example extends to the application of both frequency and frequency slope thresholds during abusive conditions of the surgical instrument. For various reasons, the frequency slope signal levels may diminish (i.e., become less negative) with extended application.

In abusive conditions, frequency, frequency slope, and current waveforms may deviate from normal operation may be generated while the ultrasonic instrument is constantly activated at a power level 5, where the jaws of the ultrasonic instrument were opened for 1 second, then closed for 1 second and repeated for 17 cycles.

When an ultrasonic instrument is activated multiple times directly against the pad, the characteristic frequency slope waveform in a first region before the generator saturates becomes less negative than in a second after the generator saturates due, in large part, to the system efficiency and resulting displacement/current drop. In the non-saturation region of the frequency slope waveform, the ultrasonic system has not yet saturated and current is maintained at or near the target current for power level 5. In the saturation region of the frequency slope waveform, the current (and therefore blade tip displacement) continually drops causing the frequency slope to increase (rate of heating drops). Note that at after several abusive cycles, e.g., the fourth abuse cycle, which is the approximate demarcation between the non-saturation and saturation regions, the resonant frequency drops consistent with FIGS. **29-31**A-C. Separate Conditions Sets for each of the non-saturation and saturation regions may be applied. A first frequency slope threshold may be employed in the non-saturation region when resonant frequency conditions are above a predetermined frequency threshold and a second, less negative frequency slope threshold may be employed in the saturation region when resonant frequency conditions are below the same predetermined frequency threshold.

A weighted frequency slope (kHz/sec) versus time waveform may be of one embodiment of a generator. When the instrument is used abusive conditions against the pad, the characteristic frequency slope waveform in the non-saturation region becomes less negative than in the saturation region due to material softening and a corresponding reduction in pad coefficient of friction. In the non-saturation region of the frequency slope waveform corresponds to when the tissue pad has not yet begun to heat significantly. In the saturation region of the frequency slope waveform, the pad begins to soften and the interface between the blade and the pad becomes more lubricious causing the frequency slope waveform to increase (rate of heating drops). Separate Conditions Sets for each of the non-saturation and saturation regions may be warranted. A first frequency slope threshold may be employed in the non-saturation region when resonant frequency conditions are above a predetermined frequency slope threshold and a second, less negative frequency slope threshold may be employed in the saturation region when the resonant frequency is below the same predetermined frequency slope threshold.

Another example case is now considered. TABLE 7 contains parameters for an ultrasonic instrument where two Condition Sets are used to account for diminishing frequency slope signal levels due to system saturation and dropping current.

TABLE 7

Representative Parameters for Triggering Audio Indications by Frequency Slope and Frequency Thresholds, accounting for diminishing frequency slope due to system saturation (two Condition Sets utilized)

| Parameter | Value* |
|---|---|
| Condition Set 1 Pulsing flag | 0 |
| Condition Set 1 LCD display flag | 0 |
| Condition Set 1 Audio flag | 1 |
| Condition Set 2 Pulsing flag | 0 |
| Condition Set 2 LCD display flag | 0 |
| Condition Set 2 Audio flag | 1 |
| Required time before triggered, Condition Set 1 | 50 msec |
| Minimum latch time, Condition Set 1 | 0 msec* |
| Frequency Slope Thresholds (one for each power level), Condition Set 1 | level 5: −0.060 kHz/sec<br>level 4: −0.053 kHz/sec<br>level 3: −0.045 kHz/sec<br>level 2: −0.038 kHz/sec<br>level 1: −0.030 kHz/sec |
| Frequency Threshold, Condition Set 1 | 56,000 Hz* |
| Required time before triggered, Condition Set 2 | 50 msec |
| Minimum latch time, Condition Set 2 | 0 msec* |
| Frequency Slope Thresholds (one for each power level), Condition Set 2 | level 5: −0.045 kHz/sec<br>level 4: −0.038 kHz/sec<br>level 3: −0.030 kHz/sec<br>level 2: −0.024 kHz/sec<br>level 1: −0.020 kHz/sec |
| Frequency Threshold, Condition Set 2 | 55,100 Hz |
| Time to wait | 100 msec |
| Cross-back Frequency Slope Threshold | −0.020 kHz/sec |
| First Pulse Amplitudes (one for each power level) | N/A |
| First Pulse Time | N/A |
| Second Pulse Amplitudes (one for each power level) | N/A |
| Second Pulse Time | N/A |

*These parameter values are set to an appropriate extreme such that they do not effectively take part in logic flow (e.g., set to always be "true")

The data generated for this example run were generated using an ultrasonic instrument to make ten successive cuts in jejunum tissue as quickly as possible. Using the parameter values from TABLE 7, the Frequency vs. Time plots for the example sample case are shown in FIGS. **35-36**.

FIG. **35** is a graphical representation **1800** of a frequency versus time waveform **1802** of one embodiment of a generator over ten cuts on tissue (e.g., jejunum tissue) and a graphical representation **1804** of a temperature versus time waveform **1805**. For the graphical representation **1800**, Frequency (Hz) is shown along the vertical axis and Time (Sec) is shown along the horizontal axis. For the graphical representation **1804**, Temperature (° F.) is shown along the vertical axis and Time (Sec) is shown along the horizontal axis.

FIG. **36** is a graphical representation **1805** of the frequency versus time waveform **1802** shown in FIG. **35** of one embodiment of a generator over ten cuts on tissue (e.g., jejunum tissue) with activation of intervening tissue at portions indicated by reference number **1806**. Frequency (Hz) is shown along the vertical axis and Time (Sec) is shown along the horizontal axis.

The frequency waveform **1802** shown in FIGS. **35** and **36** is for the example case using two Condition Sets to account for diminishing frequency slope due to electrical system saturation (diminishing displacement). Note that this is the same test run as is shown in FIGS. **29-31**A-C. In FIG. **36**, the highlighted portions **1806** indicates activation with intervening tissue (frequency drops, shape of local frequency curve related to dryness of tissue—shallow start slope, steepens as tissue dries), the highlighted portions **1808** indicate activation with minimal or no intervening tissue (local frequency slope very steep, curve shape is more linear, steepens gradually), the section of the curve with no highlighted portions **1810** indicates time within which the device is being repositioned for the next cut, blade cools in air and cools rapidly when placed on tissue (frequency rises).

FIG. **37** is a graphical representation **1812** of a frequency slope versus time waveform **1814** of one embodiment of a generator over ten cuts on jejunum tissue. Frequency slope (kHZ/Sec) is shown along the vertical axis and Time (Sec) is shown along the horizontal axis. Region B of the frequency slope waveform **1814** shows the area of the ten cut run where Condition Set 2 is triggered prior to Condition Set 1 for the first time during the ten cut run (frequency is below 55.1 kHz and frequency slope is less than −0.045 kHz/sec). The condition illustrated in Region B, where Condition Set 2 is triggered prior to Condition Set 1, is desired because the ultrasonic system is consistently saturating by this point in the run (voltage is saturating and current is diminished resulting in diminished displacement and, therefore, diminished rate of heating requiring a greater frequency slope threshold).

FIG. **38** is a graphical representation **1816** of a power versus time waveform **1818** representative of power consumed by a one embodiment of a generator over ten cuts on tissue (e.g. jejunum tissue). Power (W) is shown along the vertical axis and Time (Sec) is shown along the horizontal axis.

FIG. **39** is a graphical representation **1820** of a current versus time waveform **1822** of one embodiment of a generator over ten cuts on jejunum tissue. Current (mA) is shown along the vertical axis and Time (Sec) is shown along the horizontal axis.

Having described the basic application of the tissue algorithm discussed in connection with the logic flow diagrams **1200**, **1300**, **1400** shown in FIGS. **20-22** in terms of monitoring the frequency slope, resonant frequency, or both against their respective thresholds, the discussion now turns to a description of the latching logic and corresponding use as it relates to the tissue algorithm. The motivations for adding the latching logic to the tissue algorithm are: (a) to prevent a Condition Set from resetting (Condition Set changes from true to false) due to a blade/pad interface becoming more lubricious during a blade on pad abuse condition; and (b) to prevent a Condition Set from resetting (Condition Set changes from true to false) due to pulsed activation where periods of rapid heating are interweaved with periods of less rapid heating (sections of heat flux into the blade and sections of heat flux out of the blade are interweaved). The first and second of these motivations are shown in FIGS. **48** and **49** illustrate, respectively. As defined earlier in this disclosure, the two latch parameters addressing these motivations are "cross-back frequency slope threshold" as shown in FIG. **40** and "minimum latch time." For completeness of disclosure, FIG. **43** shows calculated frequency slope curves for the pulsed run shown in FIGS. **41** and **42**A-C.

FIG. **40** is a graphical representation **1900** of a "cross-back frequency slope threshold" parameter in connection with frequency slope versus time waveform **1902**. As shown in FIG. **40**, the "frequency slope threshold" **1904** is shown by the horizontal dashed line at −0.15 kHz/sec. The "cross-back frequency slope threshold" **1906** is shown by the horizontal dash-dot line at −0.02 kHz/sec. In this instance, the Condition Set is met and a Response Set is triggered when the local calculated frequency slope crosses the "frequency slope threshold" as shown by arrow **1908** pointing down. The Condition Set is not met (Response Set is no longer triggered) when the local calculated frequency slope crosses over the "cross-back frequency slope threshold" as shown by arrow **1910** pointing up. Note that without using the "cross-back over frequency slope threshold" in this case, the Response Set would not have been triggered when the local frequency slope crossed back over the horizontal dashed line **1904** at about 4.7 seconds shown at cross over point **1911**.

FIG. **41** is a combined graphical representation **1920** of a pulsed application of one embodiment of an ultrasonic instrument on an excised carotid artery showing normalized power, current, energy, and frequency data plotted versus time.

FIG. **42**A is a graphical representation **1921** of an impedance versus time waveform **1922** and a current versus time waveform **1924** of one embodiment of a generator during successive tissue cuts over a period of time. The impedance (Ohms) and current (mA) is shown along the vertical axis and Time (Sec) is shown along the horizontal axis.

FIG. **42**B is a graphical representation **1923** of a frequency versus time waveform **1925** of one embodiment of a generator during successive tissue cuts over a period of time. Frequency (kHz) is shown along the vertical axis and Time (Sec) is shown along the horizontal axis.

FIG. **42**C is a graphical representation **1930** of power waveform **1926**, energy waveform **1927**, a first temperature waveform **1928** and a second temperature waveform **1929** plotted versus time as of one embodiment of a generator during successive tissue cuts over a period of time. Power (W), Energy (J), and Temperature (° C.) are shown along the vertical axis and Time (Sec) is shown along the horizontal axis.

FIGS. **42**A-C show a pulsed application of an ultrasonic instrument on an excised carotid artery where the First Pulse Time is 1 second, the First Pulse Amplitude is 100% of power level 3 output current. The Second Pulse Time is 1.5 seconds and the Second Pulse Amplitude is less than 10% of power level 3 output current. Of note, the resonant frequency waveform **1925** exhibits sections of both heating (heat flux into the blade) and cooling (heat flux out of the blade). The "minimum latch time" parameter, defined herein as the minimum amount of time for response(s) to a Condition Set X to be triggered, is intended to maintain triggering of a Response Set during pulsed application (one example of a latch time may be about 1 second). Of additional note, as shown in FIG. **42**A, the load or impedance waveform **1922** does not drop below 200 Ohms throughout the run sequence. This may be favorable considering that the impedance waveform **1922** for a marching application consistently drops below about 150 Ohms while operating in air between cuts implying that an impedance limit may be used for resetting Condition Sets. In one aspect this impedance limit may be used for implementation of the "low drive in air" concept as disclosed in U.S. Pat. No. 5,026,387 to Thomas.

FIG. **43** is a graphical representation **1932** of a calculated frequency slope waveform **1934** for the pulsed application shown in FIG. **41** and FIGS. **42**A-C plotted on a gross scale. FIG. **44** is a zoomed in view of the graphical representation of the calculated frequency slope waveform **1934** for the pulsed application shown in FIG. **43**. Both FIGS. **43** and **44** show the calculated frequency slope waveform **1934** for the pulsed application shown in FIG. **41** and FIGS. **42**A-C. Frequency slope (kHz/Sec) is shown along the vertical axis and Time (Sec) is shown along the horizontal axis. Two scales are shown, where FIG. **43** shows a gross scale for frequency slope and FIG. **44** shows a "zoomed in" view. For frequency slope, the same trends seen under continuous drive are shown in pulsed drive including values that correlate well to heat flux into (negative frequency slope) and out of the blade (positive frequency slope). The transient nature of the frequency curve and frequency slope curve due to pulsing, combined with the moving average calculation of frequency slope make use of the frequency slope curve during pulsing difficult. Of note, the tissue separated at 13 seconds. As can be seen in FIG. **43** and especially FIG. **44**, the rate of cooling can be used to trigger a response correlating rapid cooling in the dwell portions of pulsed outputs to the completion of a tissue transection using logic (not shown by logic flows in FIGS. **20-22**) where frequency slope waveform **1934** exceeds a threshold value, in this case of about 0.04 kHz/sec when sampled at the ends (i.e., the settled regions) of the dwell periods. As can be seen in FIG. **42**A, the impedance waveform **1922** can be used to trigger a response correlating high impedance (high resistance to mechanical motion or vibration) to the completion of a tissue transection using logic (again, not shown by logic flows in FIGS. **20-22**) where transducer impedance waveform **1922** exceeds a threshold value, in this case of about 700 Ohms when sampled at the beginnings (i.e., the settled regions) of the dwell periods.

FIG. **45** is a graphical representation **1936** of other data waveforms **1938** of interest such as impedance, power, energy, temperature. In FIG. **45**, the vertical scale to the right applies to the impedance curve only.

The present disclosure now turns to considerations for power level and clamp pressure profile in an ultrasonic instrument. The rate of heating of a blade to pad interface is proportional to blade displacement, interface coefficient of friction and load (clamp pressure or normal force). Testing was performed to assess the tissue algorithm at a range of displacements (power levels) and device specific combinations of clamp pressure and coefficient of friction (defined largely by pad materials and blade coatings).

FIG. **46** is a graphical representation **1940** of a summary of weighted frequency slope versus power level for various ultrasonic instrument types. Weighted frequency slope (kHz/Sec) is shown along the vertical axis and power level, device type, and device are shown along the horizontal axis. The instruments used to generate the data summarized in the graphical representation **1940** are generally commercially available with some exceptions. One test procedure included clamping the device, activating the device for three seconds, and calculating the average frequency slope over the full three seconds. Other metrics, however, may be employed. For most devices, the data summarized in FIG. **46** would be approximately indicative of the minimum frequency slope value. FIG. **46** shows the frequency slope summary data for burn-in testing on shears type ultrasonic instruments where the instruments were clamped, then activated for 3 seconds, then unclamped—the average frequency slope over the full three seconds of activation was calculated and plotted as shown.

Based on predetermined tests and test data from FIG. **46**, the following frequency slope thresholds are suggested for the main power levels of use with some ultrasonic instruments:

(1) level 5 frequency slope threshold: −0.060 kHz/sec;

(2) level 3 frequency slope threshold: −0.045 kHz/sec;

(3) level 5 frequency slope threshold: −0.070 kHz/sec; and

(4) level 3 frequency slope threshold: −0.050 kHz/sec.

System stiffness includes both blade stiffness (cantilevered beam) and pad stiffness/pad thermal stability. The more differentiated the unloaded (no tissue) system stiffness is from the loaded (clamped on tissue) system stiffness, the more robust the tissue algorithm performance. Other constraints, of course, may limit system stiffness on the high end.

Further exploration of displacement effects were analyzed based on a larger set of data. For the ultrasonic system, power levels are essentially differentiated by output current target values and, current, which is proportional to vibratory amplitude or displacement. Analysis of this data also may include digital smoothing of the frequency data to obtain usable frequency slope curves.

FIGS. **47-49** show frequency and current versus time waveforms obtained using one embodiment of a generator and an ultrasonic instrument to excise a porcine carotid artery at power level 5.

FIG. **47** is a graphical representation **1970** of resonant frequency versus time waveform **1972**, an averaged resonant frequency versus time waveform **1974**, and a frequency slope versus time waveform **1976** of one embodiment of a generator. Frequency (kHz) and Frequency Slope (kHz/Sec) are shown along the vertical axes and Time (Sec) is shown along the horizontal axis. The frequency slope waveform **1976** is based on the averaged frequency data and was obtained by post processing the frequency waveform **1972** data. The raw frequency data is plotted as well as smoothed (via simple moving average) frequency data and frequency slope (calculated from the smoothed data because the raw frequency data contains stair-stepping due to rounding of the streamed data). The average resonant frequency waveform **1974** is obtained via a 70 msec moving average (kHz) of the resonant frequency data.

FIG. **48** is a zoomed in view **1978** of the resonant frequency versus time waveform **1972** and the averaged resonant frequency versus time waveform **1974** of one embodiment of a generator. Frequency (kHz) is shown along the vertical axis and Time (Sec) is shown along the horizontal axis.

FIG. **49** is a zoomed in view **1980** of the resonant frequency waveform **1972** and a current versus time waveform **1982** of one embodiment of a generator. Frequency in (Hz) and Current (A) is shown along the vertical axes.

In FIGS. **48** and **49**, the respective zoomed in views **1978**, **1980** are shown to see the effect of smoothing frequency data and to see rise information at the start of the application, which may be helpful for assessment of parameters such as Time to Wait.

Other aspects of the tissue algorithm described herein may be applied to situations when little to no intervening tissue remains (between the ultrasonic blade and the clamp arm) and waste energy is being dumped into the end effector. Accordingly, in one embodiment, the tissue algorithm may be modified to provide feedback to the user relative to this

situation. Specifically, the tissue algorithm leverages the fact that the resonance of an ultrasonic blade changes relative to temperature (decreases with increasing temperature and increases with decreasing temperature).

In one aspect the tissue algorithm disclosed herein may be employed to monitor the frequency slope of a waveform where the algorithm monitors the change in resonant frequency slope to indicate the changing condition of the tissue. In the case shown in FIG. **50**, for example, the inflection of the frequency response curve correlates to the point at which the tissue begins to separate (i.e., there is a tissue tag and the user continues to activate the instrument), which can be verified by experimentation. The change in frequency slope can be used to provide an indicator (e.g., distinct beeping sound, flashing light, tactile vibration, among others previously discussed) to the user (that waste energy is being dumped into the end effector) or the generator output could be controlled or stopped.

In another aspect, the tissue algorithm disclosed herein may be employed to monitor the frequency threshold of a waveform, where the algorithm monitors the change in frequency as the waveform crosses some threshold or difference from some known state (e.g., room temperature). Similar to monitoring the frequency slope, as the change in frequency drops below some threshold value or difference, an indication can be given to the user that the device end effector is heating at an accelerated rate. Again, FIG. **50** provides a graphical illustrative view of a frequency threshold.

In yet another aspect, the tissue algorithm disclosed herein may be employed to monitor the frequency slope change and the frequency threshold in combination. The combination of a significant change in frequency slope and a drop in frequency below some threshold can be used to provide an indication of high temperature.

Turning now to FIG. **50**, is a graphical representation **1990** of normalized combined power **1991**, impedance **1992**, current **1993**, energy **1994**, frequency **1995**, and temperature **1996** waveforms of one embodiment of a generator coupled to an ultrasonic instrument. As shown, the tissue begins to separate at 6.672 seconds. From this point until the tissue fully separates, about 55-60% of the total frequency drop is obtained, the temperature increases by a factor of about 1.92 (from 219° C. to 418° C.) and about 28% of the total energy applied is delivered. The local slopes of the frequency vs. time waveforms are shown by a first set of dashed lines **1997**, which represents a rapid change in the resonant frequency slope. Monitoring this slope **1997** affords the opportunity to indicate a dramatic change which typically occurs when there is limited to no intervening tissue and the vast majority of power is being applied to the blade/tissue pad interface. Likewise, the frequency change from its resonance in a known state (e.g., room temperature) can be used to indicate high temperatures—a frequency change threshold is shown with a second dashed line **1998**. Also, a combination of these two, frequency slope change and frequency change threshold, can be monitored for purposes of indication. Note that the frequency changes in this case from an initial value of 55,712 Hz to an end value of 55,168 Hz with the threshold shown at about 55,400 Hz.

While several embodiments have been illustrated and described, it is not the intention of the applicant to restrict or limit the scope of the appended claims to such detail. Numerous variations, changes, and substitutions will occur to those skilled in the art without departing from the scope of the invention. Moreover, the structure of each element associated with the described embodiments can be alternatively described as a means for providing the function performed by the element. Accordingly, it is intended that the described embodiments be limited only by the scope of the appended claims.

Reference throughout the specification to "various embodiments," "some embodiments," "one embodiment," or "an embodiment" means that a particular feature, structure, or characteristic described in connection with the embodiment is included in at least one embodiment. Thus, appearances of the phrases "in various embodiments," "in some embodiments," "in one embodiment," or "in an embodiment" in places throughout the specification are not necessarily all referring to the same embodiment. Furthermore, the particular features, structures, or characteristics may be combined in any suitable manner in one or more embodiments. Thus, the particular features, structures, or characteristics illustrated or described in connection with one embodiment may be combined, in whole or in part, with the features structures, or characteristics of one or more other embodiments without limitation.

The invention claimed is:

**1**. A method of driving an end effector coupled to an ultrasonic drive system of a surgical instrument, the method comprising:

generating by a generator at least one electrical signal;

monitoring the at least one electrical signal against a first set of logic conditions;

triggering a first response of the generator when the first set of logic conditions is met;

determining from the at least one electrical signal a parameter associated with the surgical instrument,

wherein the determined parameter is indicative of a temperature change of the end effector; and

monitoring impedance of a transducer of the ultrasonic drive system in a dwells region during pulsed activation.

**2**. The method of claim **1**, further comprising:

resetting the generator when the determined parameter crosses a predetermined threshold.

**3**. The method of claim **1**, wherein the determined parameter is a rate of temperature change of the end effector assessed by calculating a frequency slope, the method further comprising:

comparing the frequency slope against a predetermined threshold.

**4**. The method of claim **3**, wherein the rate of temperature change is a rate of cooling.

**5**. The method of claim **3**, wherein the rate of temperature change is a rate of heating.

**6**. The method of claim **1**, wherein the determined parameter is proportional to a frequency slope, and wherein the determined parameter is a rate of temperature change of the end effector.

**7**. The method of claim **6**, wherein the rate of temperature change is a rate of cooling.

**8**. The method of claim **6**, wherein the rate of temperature change is a rate of heating.

**9**. A method of driving an end effector coupled to an ultrasonic drive system of a surgical instrument, the method comprising:

generating by a generator at least one electrical signal;

determining from the at least one electrical signal a parameter associated with the end effector;

comparing the determined parameter against a predetermined parameter,

wherein the determined parameter is indicative of a temperature change of the end effector; and

monitoring impedance of the end effector of the ultrasonic drive system in a dwells region during pulsed activation.

**10**. The method of claim **9**, wherein the determined parameter comprises the impedance of the end effector.

**11**. The method of claim **10**, comprising resetting the generator when the impedance crosses a predetermined threshold.

**12**. The method of claim **9**, wherein the determined parameter is a rate of temperature change of the end effector.

**13**. The method of claim **12**, wherein the rate of temperature change is selected from the group consisting of a rate of cooling and a rate of heating.

**14**. A method of driving an end effector coupled to an ultrasonic drive system of a surgical instrument, the method comprising:

generating by a generator at least one electrical signal;

monitoring the at least one electrical signal against a first set of logic conditions;

triggering a first response of the generator when the first set of logic conditions is met;

determining a frequency slope of the at least one electrical signal; and

monitoring impedance of the end effector of the ultrasonic drive system in a dwells region during pulsed activation.

**15**. The method of claim **14**, wherein the frequency slope is proportional to a rate of temperature change of the end effector.

**16**. The method of claim **15**, wherein the rate of temperature change is a rate of cooling.

**17**. The method of claim **15**, wherein the rate of temperature change is a rate of heating.

**18**. The method of claim **14**, comprising comparing the frequency slope against a predetermined threshold.

* * * * *

| | | | |
|---|---|---|---|
| 专利名称(译) | 用于切割和凝结组织的装置和技术 | | |
| 公开(公告)号 | US10335614 | 公开(公告)日 | 2019-07-02 |
| 申请号 | US15/290570 | 申请日 | 2016-10-11 |
| [标]申请(专利权)人(译) | 爱惜康内镜外科，LLC | | |
| 申请(专利权)人(译) | 爱惜康内镜外科，LLC | | |
| 当前申请(专利权)人(译) | ETHICON LLC | | |
| [标]发明人 | MESSERLY JEFFREY D<br>WIENER EITAN T<br>NOYES BRIAN T<br>ALDRIDGE JEFFREY L<br>GIORDANO JAMES R<br>BEETEL III ROBERT J<br>ABBOTT DANIEL J<br>MILLER MATTHEW C<br>WILEY JEFFREY P<br>PRICE NATHAN J<br>PRICE DANIEL W<br>KOCH JR ROBERT L | | |
| 发明人 | MESSERLY, JEFFREY D.<br>WIENER, EITAN T.<br>NOYES, BRIAN T.<br>ALDRIDGE, JEFFREY L.<br>GIORDANO, JAMES R.<br>BEETEL, III, ROBERT J.<br>ABBOTT, DANIEL J.<br>MILLER, MATTHEW C.<br>WILEY, JEFFREY P.<br>PRICE, NATHAN J.<br>PRICE, DANIEL W.<br>KOCH, JR., ROBERT L. | | |
| IPC分类号 | H01L41/09 B06B1/02 G05B15/02 A61B18/14 A61B17/32 A61N7/00 A61N7/02 A61B17/00 A61B18/00 A61B5/053 A61B5/00 | | |
| CPC分类号 | A61N7/00 A61B18/14 A61N7/02 B06B1/0284 G05B15/02 A61B17/320092 B06B2201/76 A61B5/053 A61B5/4836 A61B2017/00026 A61B2017/00084 A61B2017/00176 A61B2017/00203 A61B2017/00973 A61B2018/00005 A61B2018/0063 A61B2018/00303 A61B2018/00589 A61B2018/00601 A61B2018/00666 A61B2018/00791 A61B2018/00845 A61B2018/00875 A61B2018/00994 A61B18/1206 A61B18/1445 A61B2017/320093 A61B2017/320094 A61B2017/320095 | | |
| 优先权 | 61/250217 2009-10-09 US<br>61/188790 2008-08-13 US<br>61/086619 2008-08-06 US | | |
| 其他公开文献 | US20170095267A1 | | |
| 外部链接 | Espacenet | | |


摘要(译)
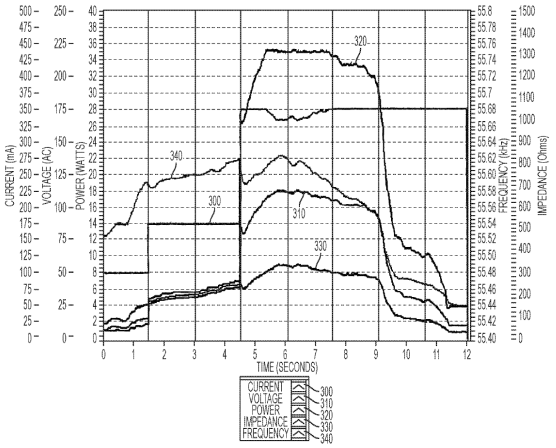
各种实施例涉及一种驱动耦合到外科器械的超声驱动系统的末端执行器的方法。该方法包括产生至少一个电信号。针对第一组逻辑条件监控至少一个电信号。当满足第一组逻辑条件时，触发第一响应。从至少一个电信号确定参数。