US009578903B2

(12) **United States Patent**
**Cobbett et al.**

(10) **Patent No.: US 9,578,903 B2**
(45) **Date of Patent: Feb. 28, 2017**

(54) **ATHLETIC BAND WITH REMOVABLE MODULE**

(71) Applicant: **NIKE, Inc.**, Beaverton, OR (US)

(72) Inventors: **Jamian R. Cobbett**, Portland, OR (US); **Monica Judge**, Portland, OR (US); **Summer Schneider**, Portland, OR (US); **Ariana Manesh**, Portland, OR (US); **Simon Quay**, Portland, OR (US); **Bill Webb**, San Francisco, CA (US); **Quinn Fitzgerald**, San Francisco, CA (US); **Russ Watt**, Portland, OR (US)

(73) Assignee: **NIKE, Inc.**, Beaverton, OR (US)

( * ) Notice: Subject to any disclaimer, the term of this patent is extended or adjusted under 35 U.S.C. 154(b) by 0 days.

(21) Appl. No.: **14/946,729**

(22) Filed: **Nov. 19, 2015**

(65) **Prior Publication Data**

US 2016/0135695 A1 May 19, 2016

**Related U.S. Application Data**

(60) Provisional application No. 62/215,497, filed on Sep. 8, 2015, provisional application No. 62/168,357, filed

(Continued)

(51) **Int. Cl.**

***A61B 5/024*** (2006.01)
***A61B 5/11*** (2006.01)

(Continued)

(52) **U.S. Cl.**

CPC ..... ***A41D 1/005*** (2013.01); ***A41D 1/002*** (2013.01); ***A41D 20/00*** (2013.01); ***A41D 27/205*** (2013.01); ***A41H 43/04*** (2013.01); ***A61B 5/0205*** (2013.01); ***A61B 5/4866*** (2013.01); ***A61B 5/681*** (2013.01); ***A61B 5/6804*** (2013.01);

(Continued)

(58) **Field of Classification Search**

CPC ..... A61B 5/02416; A61B 5/024

See application file for complete search history.

(56) **References Cited**

U.S. PATENT DOCUMENTS

1,531,994 A 3/1925 Starmer
4,462,116 A 7/1984 Sanzone et al.

(Continued)

FOREIGN PATENT DOCUMENTS

EP 1559335 A2 8/2005
EP 2260910 A1 12/2010

(Continued)

OTHER PUBLICATIONS

Shekharappa et al, Correlation between body mass index and cardiovascular parameters in obese and non-obese in different age groups, 2011, Internatinal Journal of Biological & Medical Research, 2(2): 551-555.

(Continued)

*Primary Examiner* — Gary Jackson
*Assistant Examiner* — Amanda Steinberg
(74) *Attorney, Agent, or Firm* — Banner & Witcoff, Ltd.

(57) **ABSTRACT**

A device for monitoring athletic activity of a user. In one example, the device has a sensor, and executes a calibration process using data received from the sensor to determine a correct positioning of the device on the user.

**20 Claims, 91 Drawing Sheets**

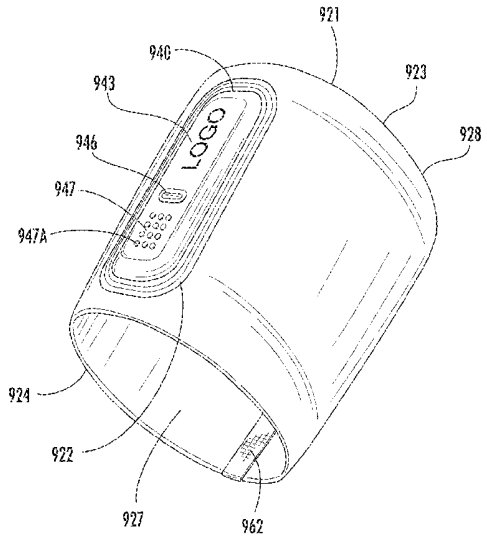

**Related U.S. Application Data**

on May 29, 2015, provisional application No. 62/168,502, filed on May 29, 2015, provisional application No. 62/146,029, filed on Apr. 10, 2015, provisional application No. 62/100,782, filed on Jan. 7, 2015, provisional application No. 62/082,113, filed on Nov. 19, 2014.

(51) **Int. Cl.**

| | |
|---|---|
| ***A61B 5/00*** | (2006.01) |
| ***A61B 5/0205*** | (2006.01) |
| ***A41D 1/00*** | (2006.01) |
| ***A63B 24/00*** | (2006.01) |
| ***A41D 20/00*** | (2006.01) |
| ***G08B 6/00*** | (2006.01) |
| ***G06F 3/02*** | (2006.01) |
| ***G06F 3/01*** | (2006.01) |
| ***G06F 1/16*** | (2006.01) |
| ***A41D 27/20*** | (2006.01) |
| ***B29C 65/02*** | (2006.01) |
| ***B29C 65/52*** | (2006.01) |
| ***B29C 65/78*** | (2006.01) |
| ***B29C 65/00*** | (2006.01) |
| ***A41H 43/04*** | (2006.01) |
| ***G06F 19/00*** | (2011.01) |
| *B29L 29/00* | (2006.01) |
| *B29L 31/48* | (2006.01) |
| *A45F 5/00* | (2006.01) |

(52) **U.S. Cl.**

CPC ..... ***A61B 5/6807*** (2013.01); ***A61B 5/6824*** (2013.01); ***A61B 5/6831*** (2013.01); ***A61B 5/7207*** (2013.01); ***A61B 5/7221*** (2013.01); ***A63B 24/0062*** (2013.01); ***B29C 65/02*** (2013.01); ***B29C 65/52*** (2013.01); ***B29C 65/7832*** (2013.01); ***B29C 66/4324*** (2013.01); ***B29C 66/71*** (2013.01); ***B29C 66/729*** (2013.01); ***G06F 1/163*** (2013.01); ***G06F 3/016*** (2013.01); ***G06F 3/0227*** (2013.01); ***G06F 19/3481*** (2013.01); ***G08B 6/00*** (2013.01); *A41D 2300/52* (2013.01); *A45F 2005/008* (2013.01); *A45F 2200/05* (2013.01); *A61B 5/02416* (2013.01); *A61B 5/1118* (2013.01); *A61B 2503/10* (2013.01); *A61B 2560/0223* (2013.01); *B29K 2623/06* (2013.01); *B29K 2913/00* (2013.01); *B29K 2995/0046* (2013.01); *B29L 2029/00* (2013.01); *B29L 2031/48* (2013.01)

(56) **References Cited**

U.S. PATENT DOCUMENTS

| | | | | |
|---|---|---|---|---|
| 5,353,793 | A | 10/1994 | Bornn | |
| 5,547,115 | A | 8/1996 | Ambrosius et al. | |
| 6,178,343 | B1 | 1/2001 | Bindszus et al. | |
| 6,425,137 | B1 | 7/2002 | Fakhrai | |
| 8,381,989 | B2 | 2/2013 | O'Neill | |
| 9,141,087 | B2 * | 9/2015 | Brown | G04F 10/00 |
| 2002/0124295 | A1 | 9/2002 | Fenwick et al. | |
| 2004/0010199 | A1 | 1/2004 | Hashimoto et al. | |
| 2004/0171464 | A1 | 9/2004 | Ashby et al. | |
| 2005/0119833 | A1 | 6/2005 | Nanikashvili | |
| 2007/0021269 | A1 | 1/2007 | Shum | |
| 2007/0261703 | A1 | 11/2007 | Gheneva et al. | |
| 2007/0300174 | A1 | 12/2007 | Macbeth et al. | |
| 2008/0058668 | A1 * | 3/2008 | Seyed Momen | A61B 5/04888 600/546 |
| 2009/0012542 | A1 | 1/2009 | N'diaye et al. | |
| 2009/0292178 | A1 | 11/2009 | Ellis et al. | |
| 2010/0010357 | A1 | 1/2010 | Ostrowiecki | |
| 2010/0032462 | A1 | 2/2010 | Cameron et al. | |
| 2010/0268056 | A1 | 10/2010 | Picard et al. | |
| 2011/0205161 | A1 | 8/2011 | Myers et al. | |
| 2012/0229248 | A1 * | 9/2012 | Parshionikar | G08B 21/06 340/3.1 |
| 2013/0237882 | A1 * | 9/2013 | Niemimaki | A61B 5/4866 600/595 |
| 2013/0267854 | A1 | 10/2013 | Johnson et al. | |
| 2014/0107493 | A1 | 4/2014 | Yuen et al. | |
| 2014/0176944 | A1 | 6/2014 | Addison et al. | |
| 2014/0213863 | A1 | 7/2014 | Loseu et al. | |
| 2014/0213917 | A1 | 7/2014 | Hobeika et al. | |
| 2014/0316305 | A1 * | 10/2014 | Venkatraman | A61B 5/1112 600/595 |
| 2015/0031964 | A1 | 1/2015 | Bly et al. | |
| 2015/0164349 | A1 * | 6/2015 | Gopalakrishnan | A61B 5/02405 600/508 |
| 2015/0169074 | A1 * | 6/2015 | Ataee | G06F 3/017 345/156 |
| 2015/0182160 | A1 * | 7/2015 | Kim | A61B 5/0488 600/301 |
| 2015/0190072 | A1 * | 7/2015 | Armstrong | G06F 19/3481 600/301 |
| 2015/0257708 | A1 | 9/2015 | Winokur et al. | |
| 2015/0370333 | A1 * | 12/2015 | Ataee | G06F 3/015 345/156 |

FOREIGN PATENT DOCUMENTS

| | | | |
|---|---|---|---|
| WO | 0115286 | A1 | 3/2001 |
| WO | 2010015030 | A1 | 2/2010 |
| WO | 2014037874 | A1 | 3/2014 |

OTHER PUBLICATIONS

Weight Loss Resources, BMI Calculator, 2004, Web, Retreived from: http://www.weightlossresources.co.uk/body_weight/healthy_weight/bmi_calculator.htm.

CNET, First look: Withings Pulse a sleek wireless pedometer and heart rate monitor, 2013, Web Video. Retrieved from: https://www.youtube.com/watch?v=j8L61s0fYmM.

Ratas, Review of Withings Pulse, 2013, Web, Retrieved from: http://technogog.com/review/reviewofwithingspulse/.

Cambridge University Engineering Department, Materials Data Book, 2003, Web, Rerieved from: http://www.mdpeng.cam.ac.uk/web/library/enginfo/dueddatabooks/materials.pdf.

May 4, 2016—(WO) ISR & WO—App PCT/US15/61694.

Funada S et al: "Body mass index and cardiovascular disease mortality in Japan: The Ohsaki Study", Preventive Medicine, Academic Press, XX, vol. 47, No. 1, Jul. 1, 2009 (Jul. 1, 2008), pp. 66-70.

Feb. 18, 2016—(WO) Internation Search Report/Written Opinion—App PCT/US15/61691.

Feb. 18, 2016—(WO) International Search Report/Written Opinion—App PCT/US15/61675.

Feb. 18, 2016—(WO) International Search Report/Written Opinion—App PCT/US15/61676.

Apr. 29, 2016—(WO) ISR & WO—App No. PCT/US2015/061644.

Jun. 7, 2016—(WO) ISR & WO—App No. PCT/US2015/061670.

Shad, Lessons Learnt From Breaking Things: Wrist Activity Trackers, 2013 Web, Retrieved from: http://www.mindtribe.com/2013/10/lessonslearntfrombreakinthings1/.

* cited by examiner

FIG. 1

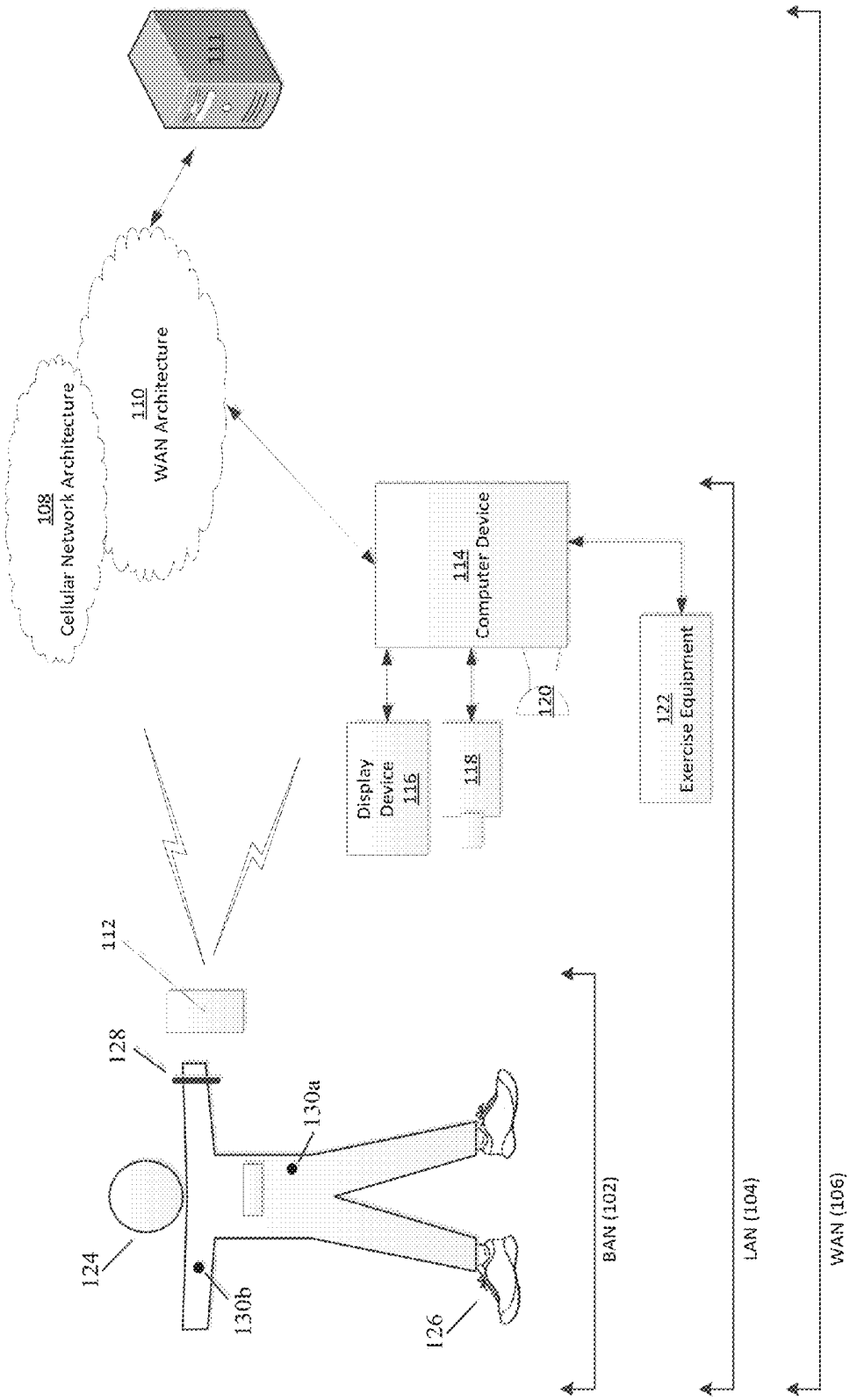
108
Cellular Network Architecture
110
WAN Architecture
114
Computer Device
Display Device 116
118
120
122
Exercise Equipment
112
128
124
130a
130b
126
BAN (102)
LAN (104)
WAN (106)

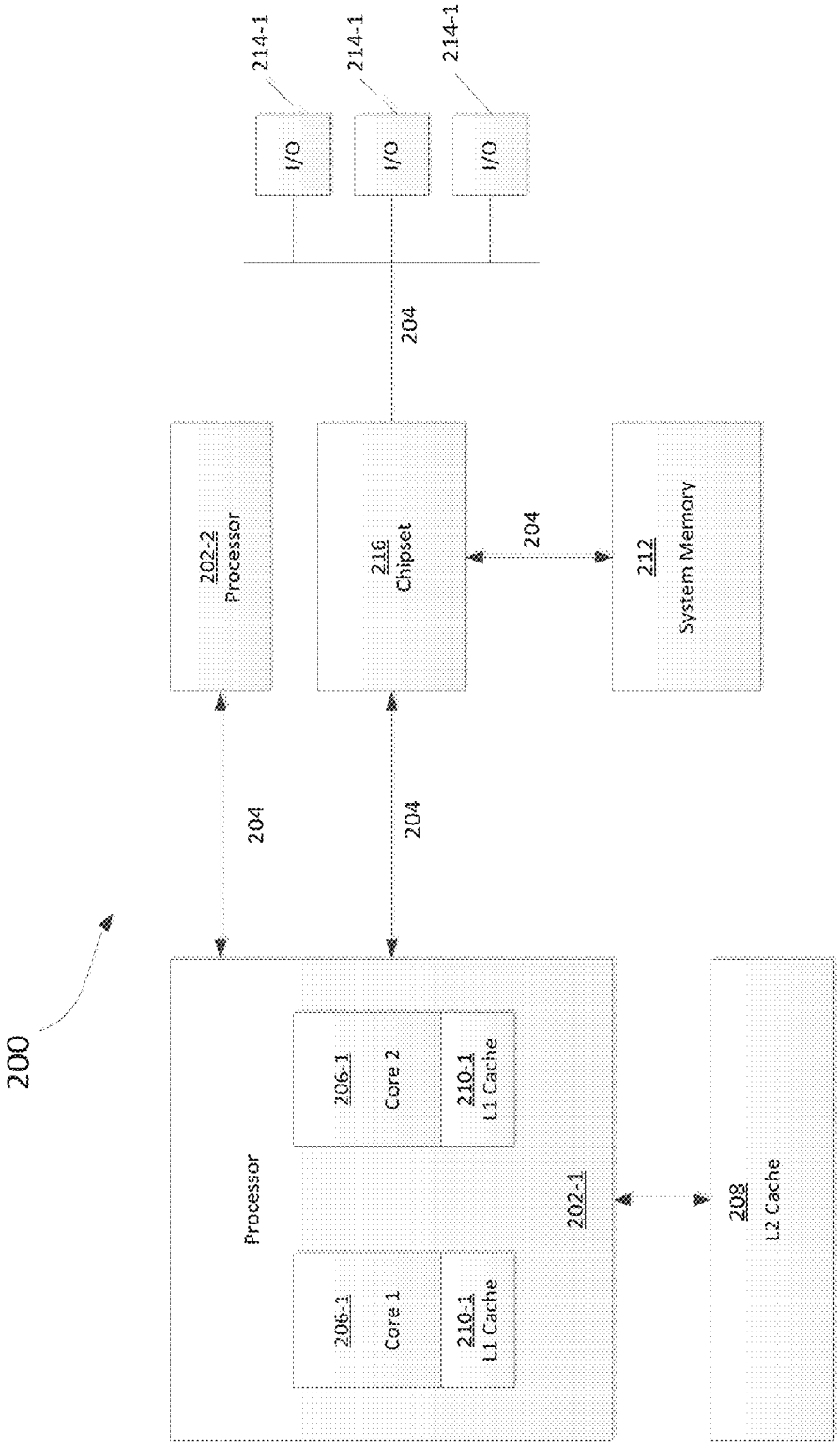
200
Processor
206-1
Core 1
210-1
L1 Cache
206-1
Core 2
210-1
L1 Cache
202-1
208
L2 Cache
204
204
202-2
Processor
216
Chipset
204
212
System Memory
204
I/O
214-1
I/O
214-1
I/O
214-1

FIG. 2

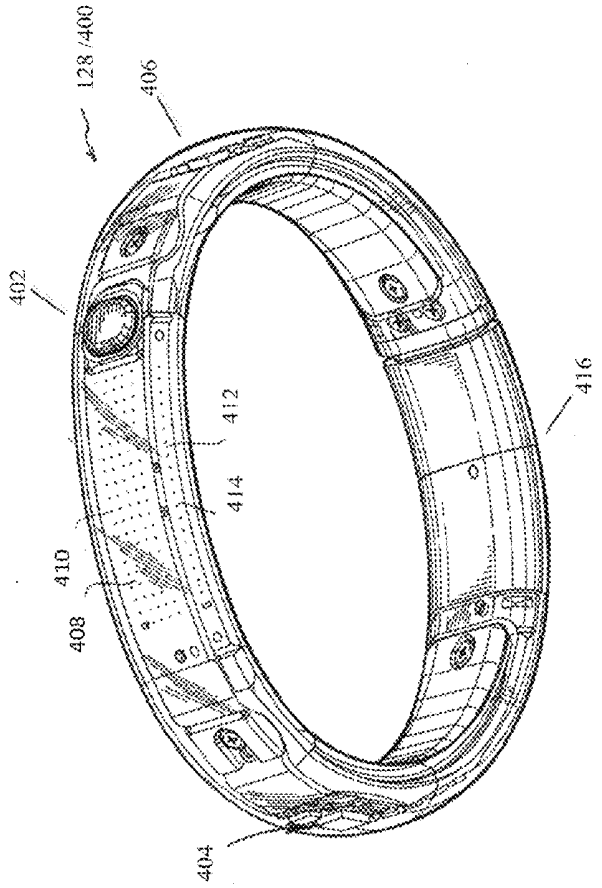
128 /400
406
402
412
414
410
408
404
416

FIG. 4

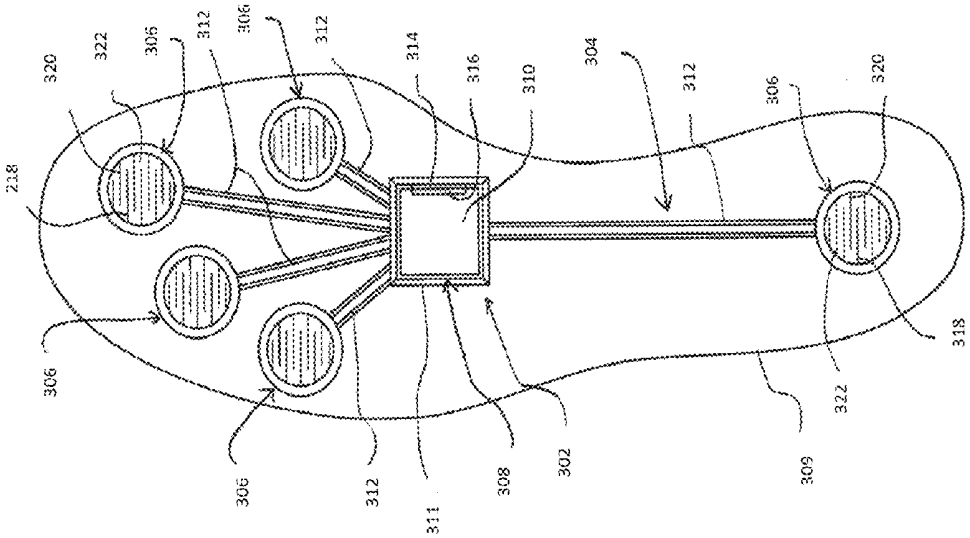
228
320
322
306
312
306
312
314
316
310
304
312
306
320
306
306
312
311
308
302
309
322
318

FIG. 3

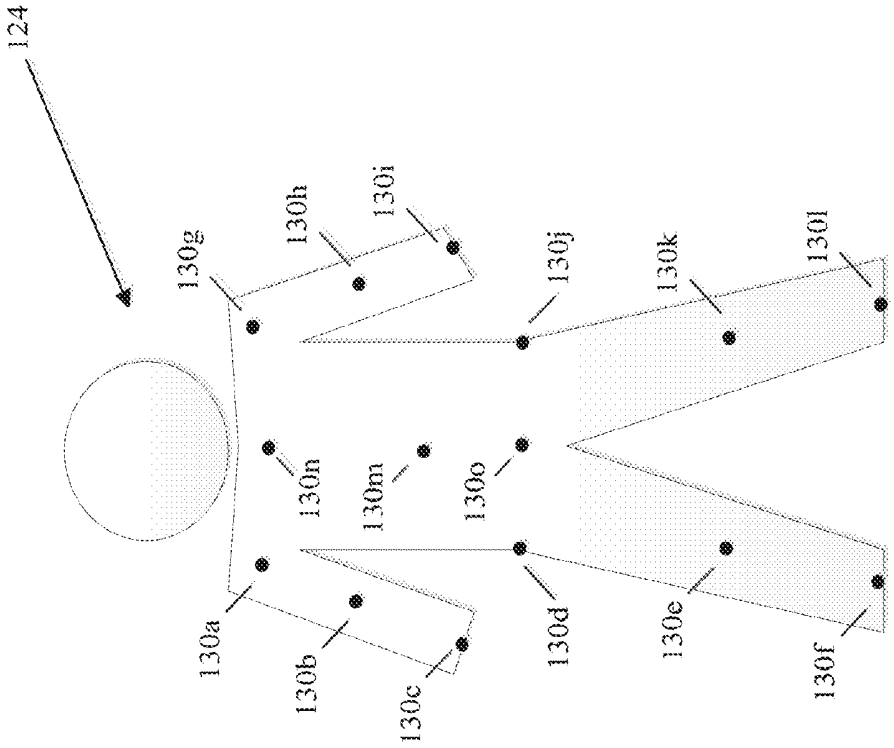
124
130a
130b
130c
130d
130e
130f
130g
130h
130i
130j
130k
130l
130m
130n
130o

FIG. 5

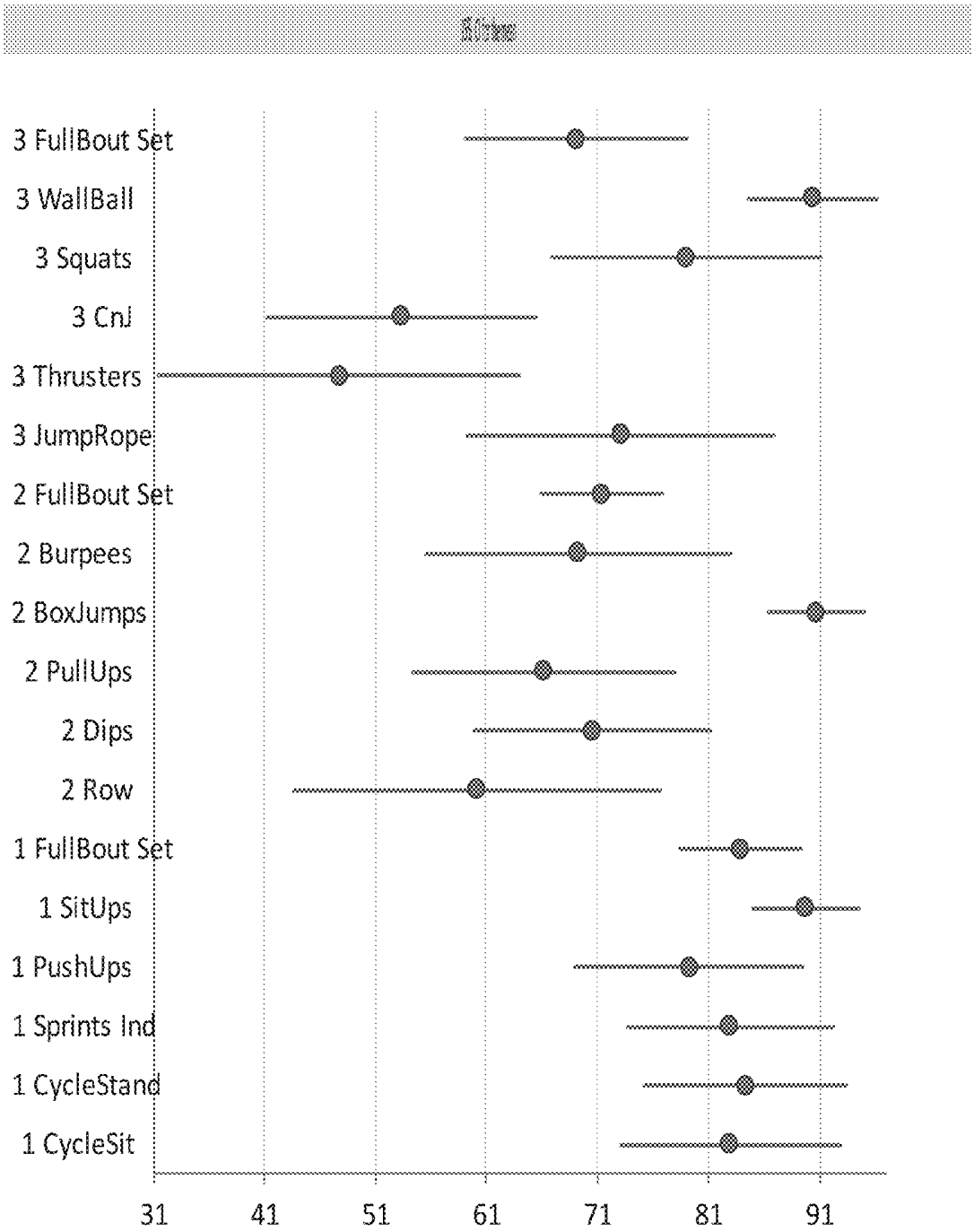
3 FullBout Set
3 WallBall
3 Squats
3 CnJ
3 Thrusters
3 JumpRope
2 FullBout Set
2 Burpees
2 BoxJumps
2 PullUps
2 Dips
2 Row
1 FullBout Set
1 SitUps
1 PushUps
1 Sprints Ind
1 CycleStand
1 CycleSit
31
41
51
61
71
81
91

FIG. 6

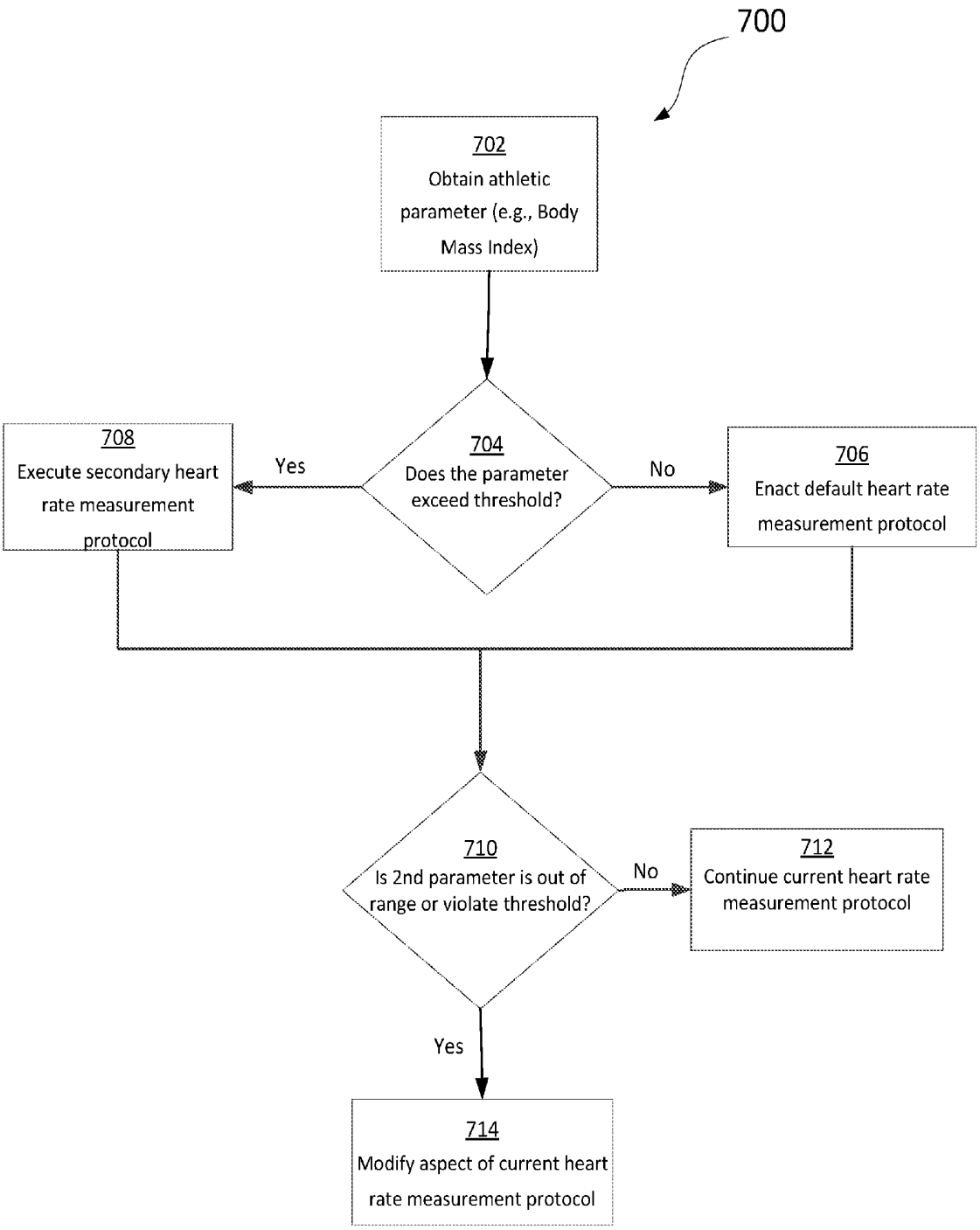
700
702
Obtain athletic parameter (e.g., Body Mass Index)
704
Does the parameter exceed threshold?
Yes
No
708
Execute secondary heart rate measurement protocol
706
Enact default heart rate measurement protocol
710
Is 2nd parameter is out of range or violate threshold?
No
712
Continue current heart rate measurement protocol
Yes
714
Modify aspect of current heart rate measurement protocol

FIG. 7

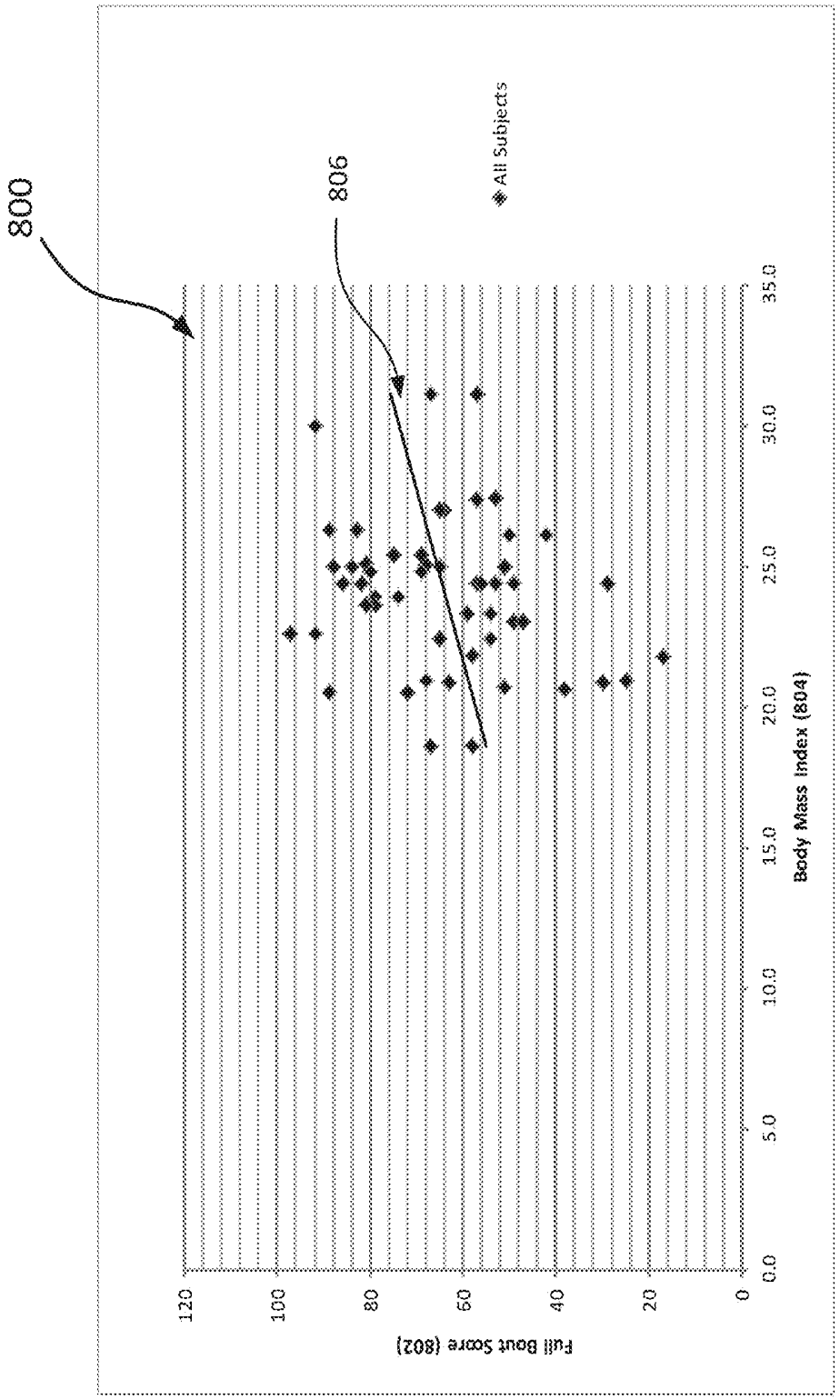
800
806
All Subjects
Full Bout Score (802)
120
100
80
60
40
20
0
0.0
5.0
10.0
15.0
20.0
25.0
30.0
35.0
Body Mass Index (804)

FIG. 8

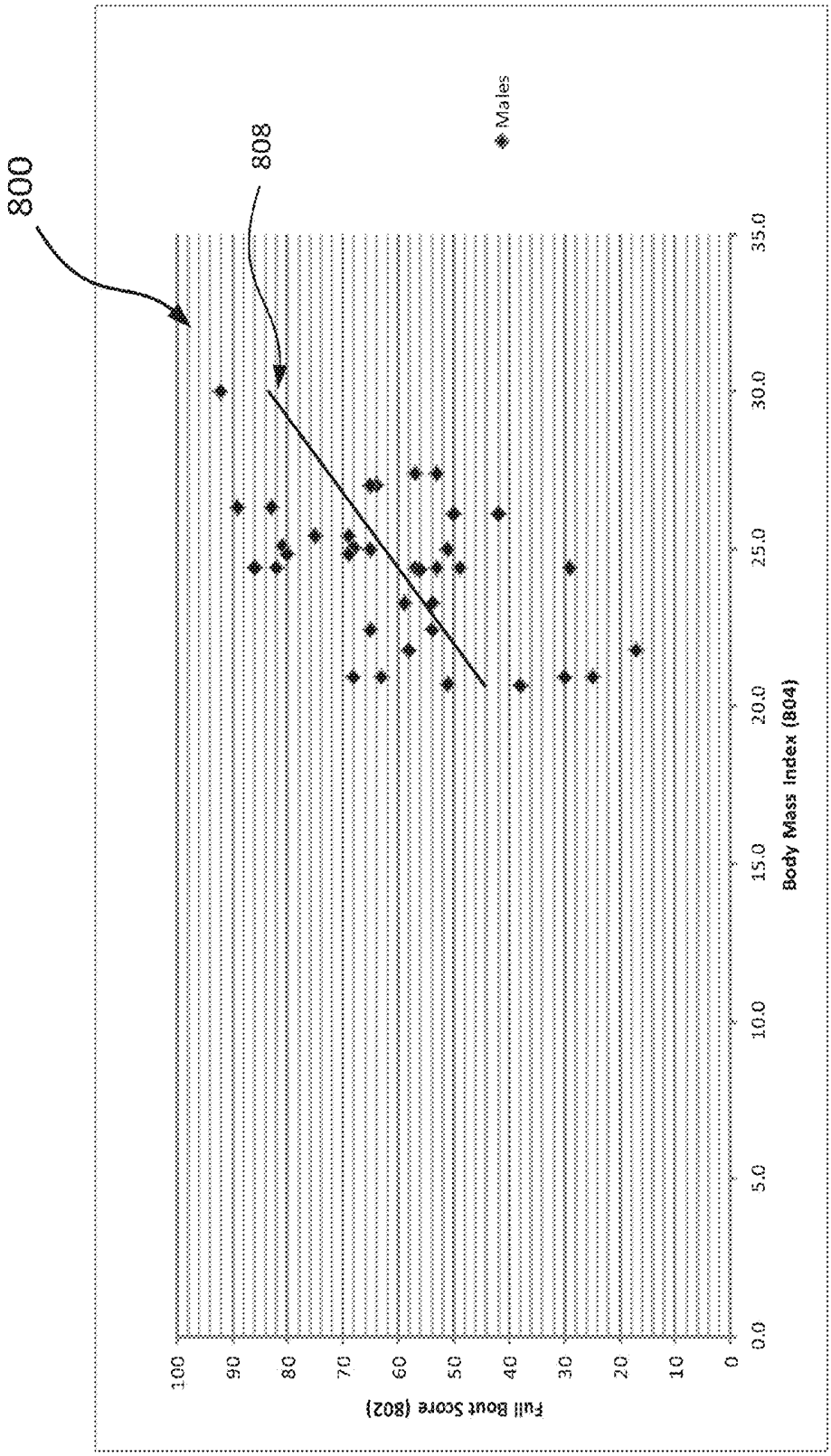
800
808
Males
Full Bout Score (802)
100
90
80
70
60
50
40
30
20
10
0
0.0
5.0
10.0
15.0
20.0
25.0
30.0
35.0
Body Mass Index (804)

FIG. 9

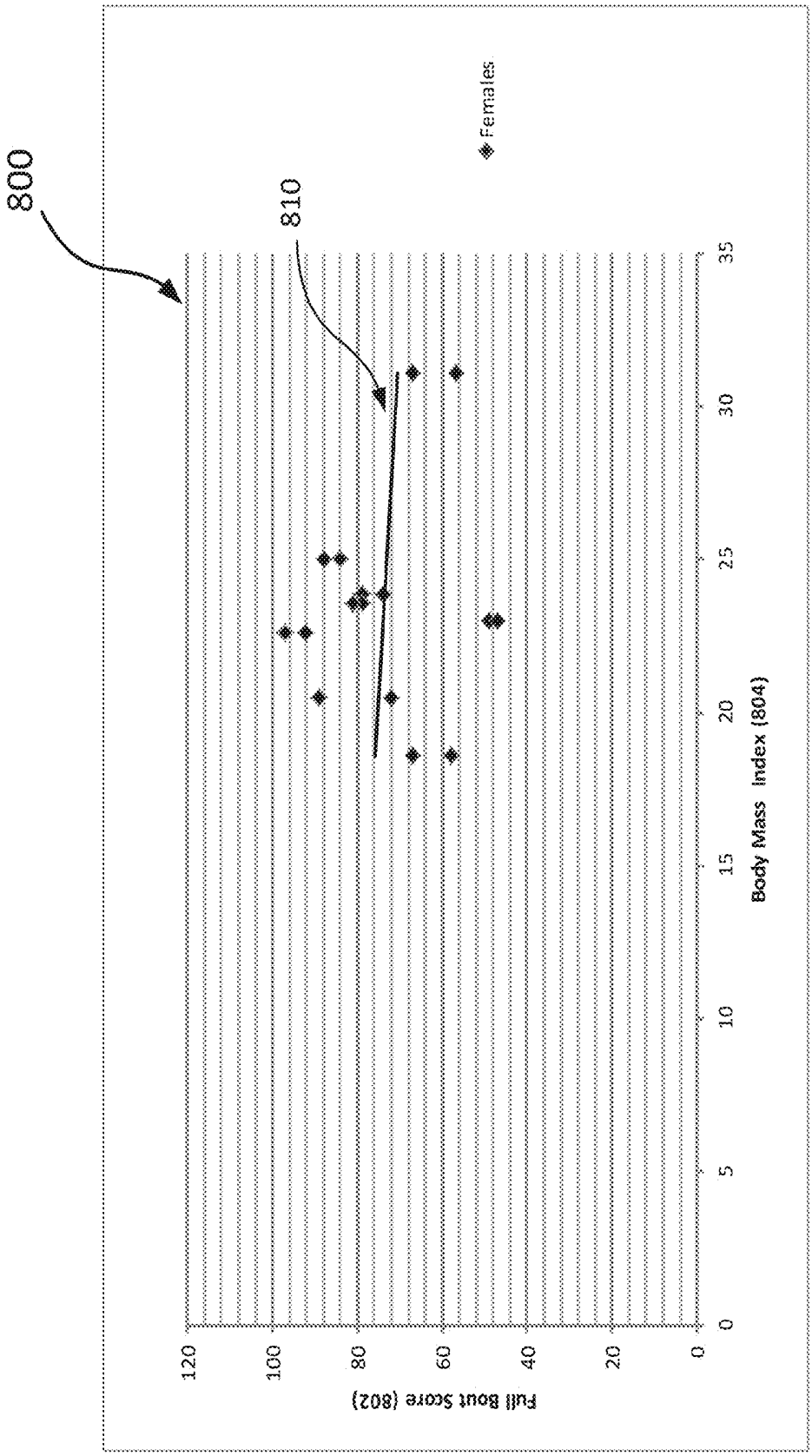
800
810
Females
Full Bout Score (802)
120
100
80
60
40
20
0
0
5
10
15
20
25
30
35
Body Mass Index (804)

FIG. 10

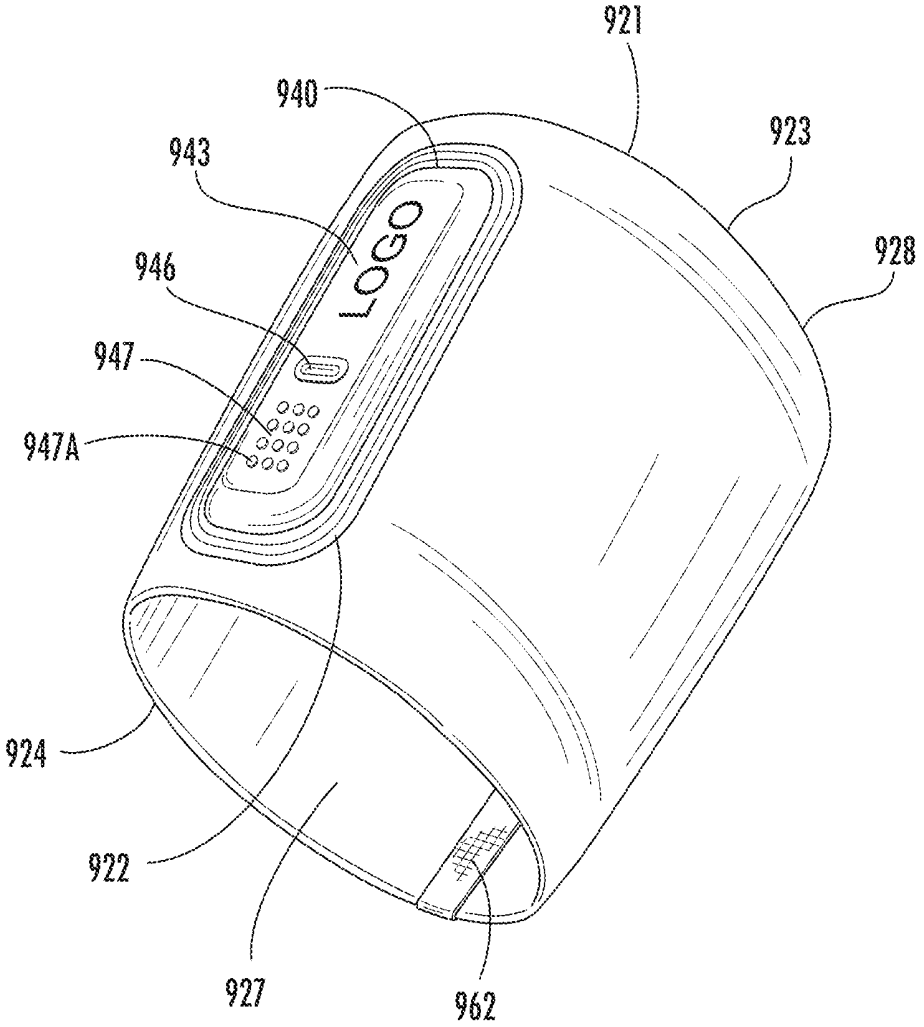


FIG. 11

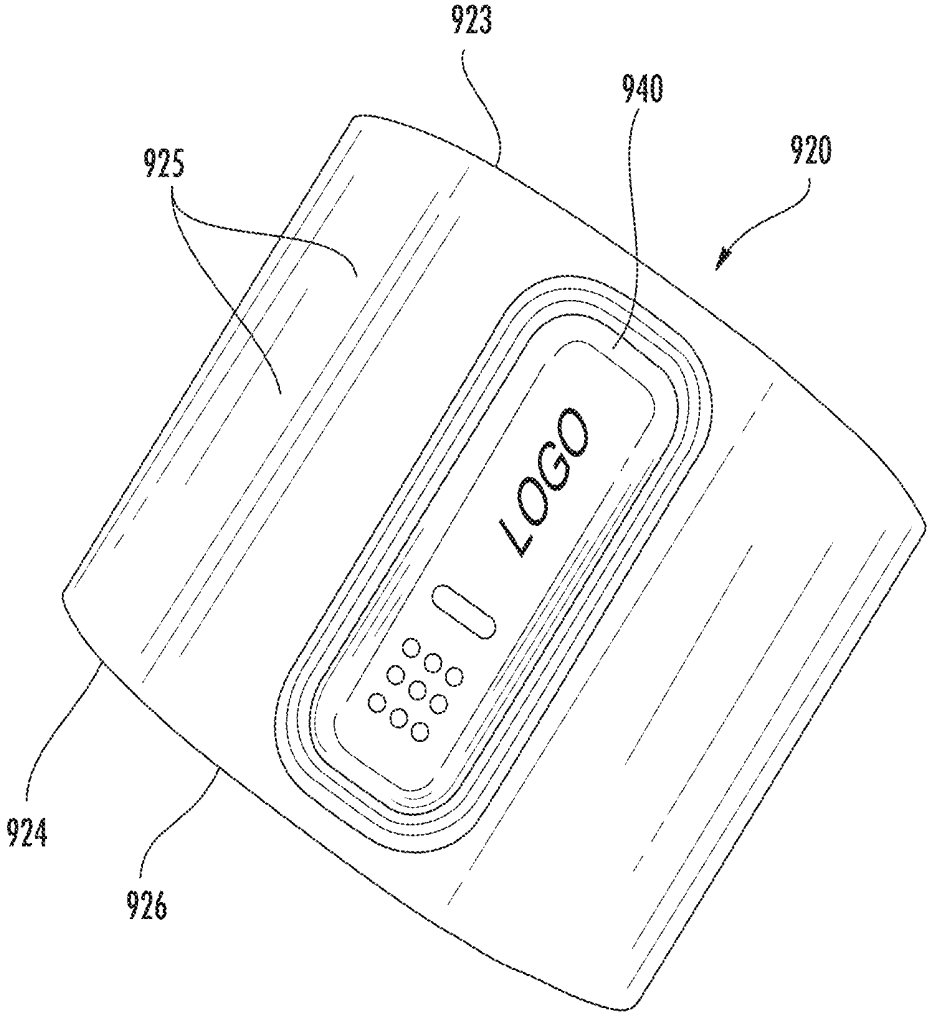


FIG. 12

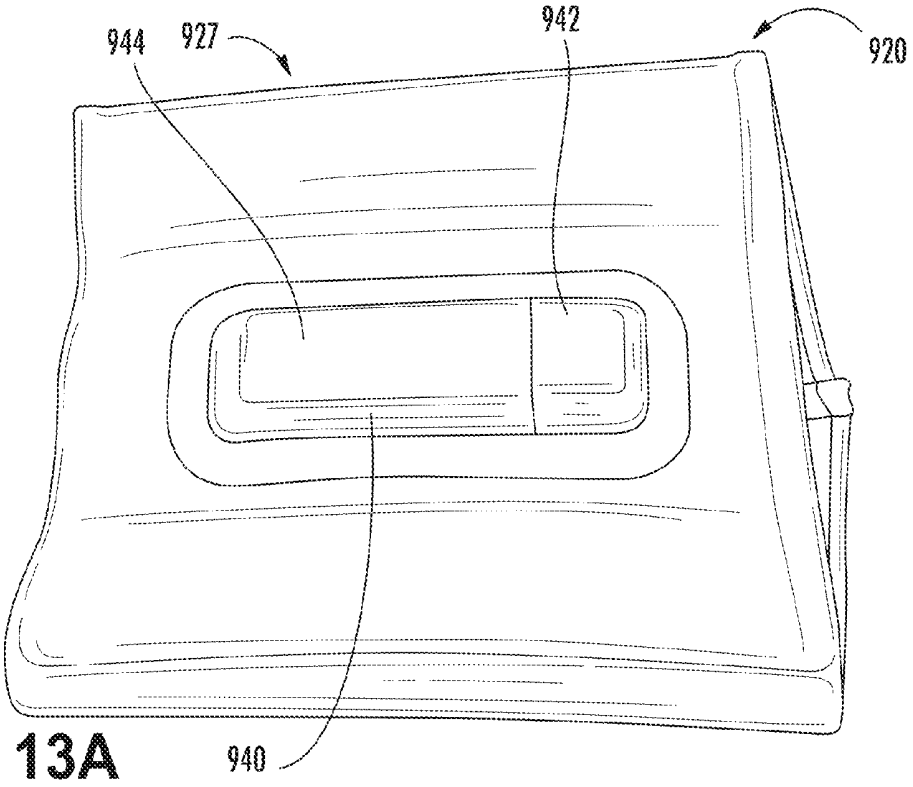


FIG. 13A

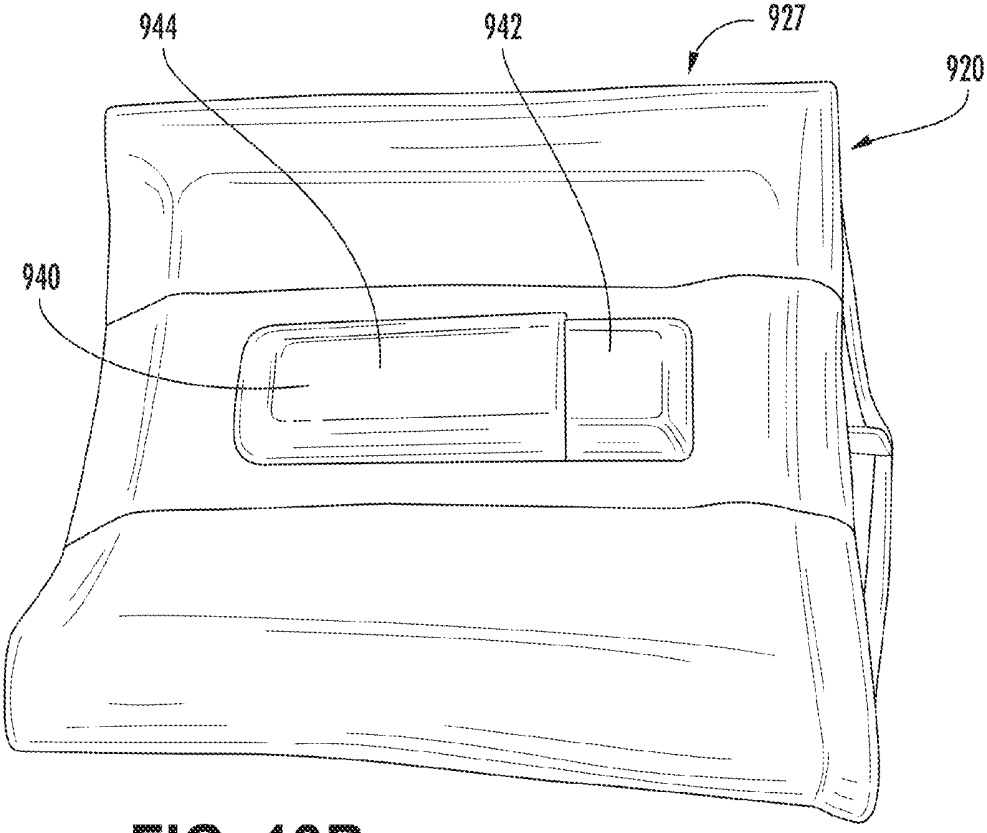


FIG. 13B

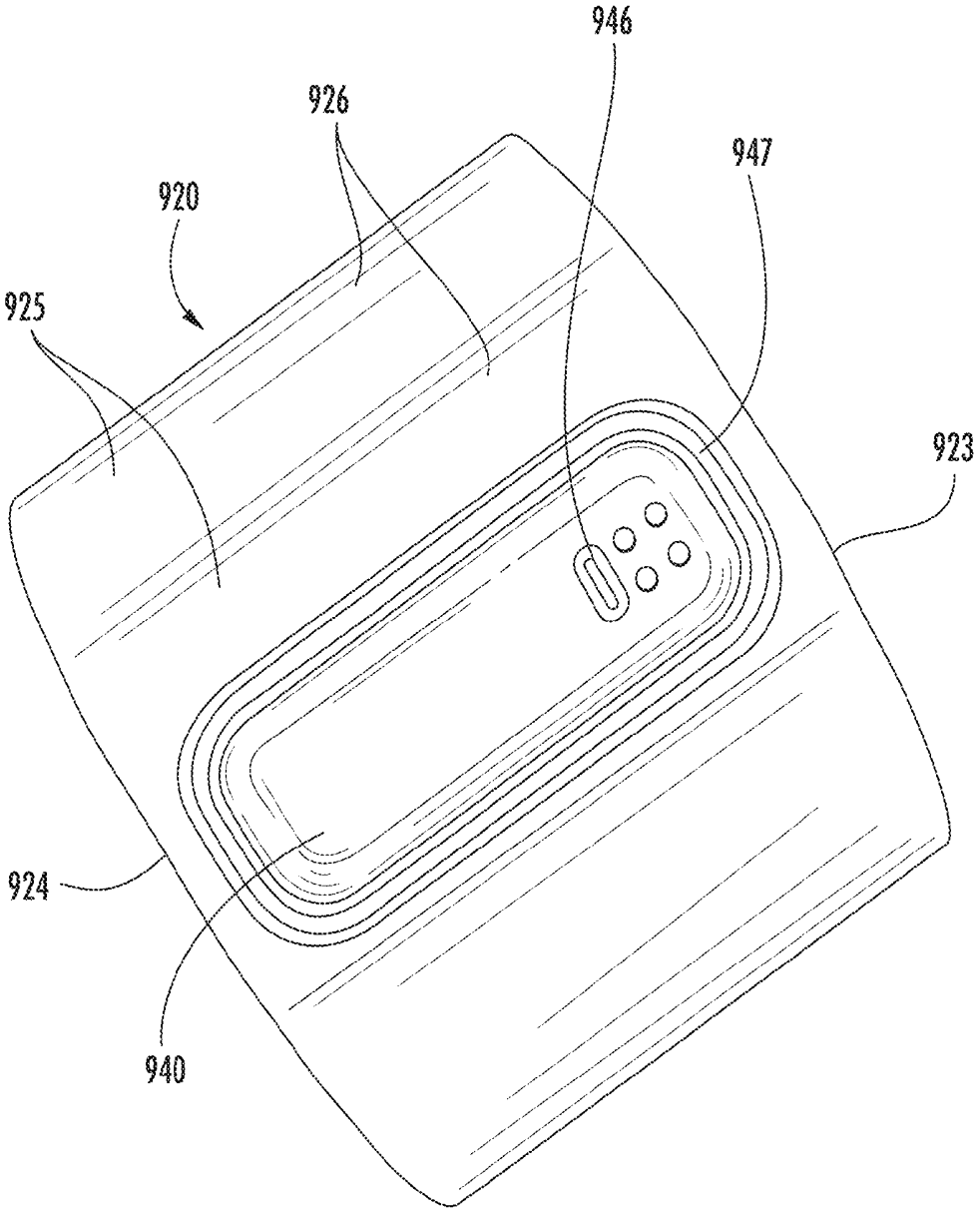


FIG. 14

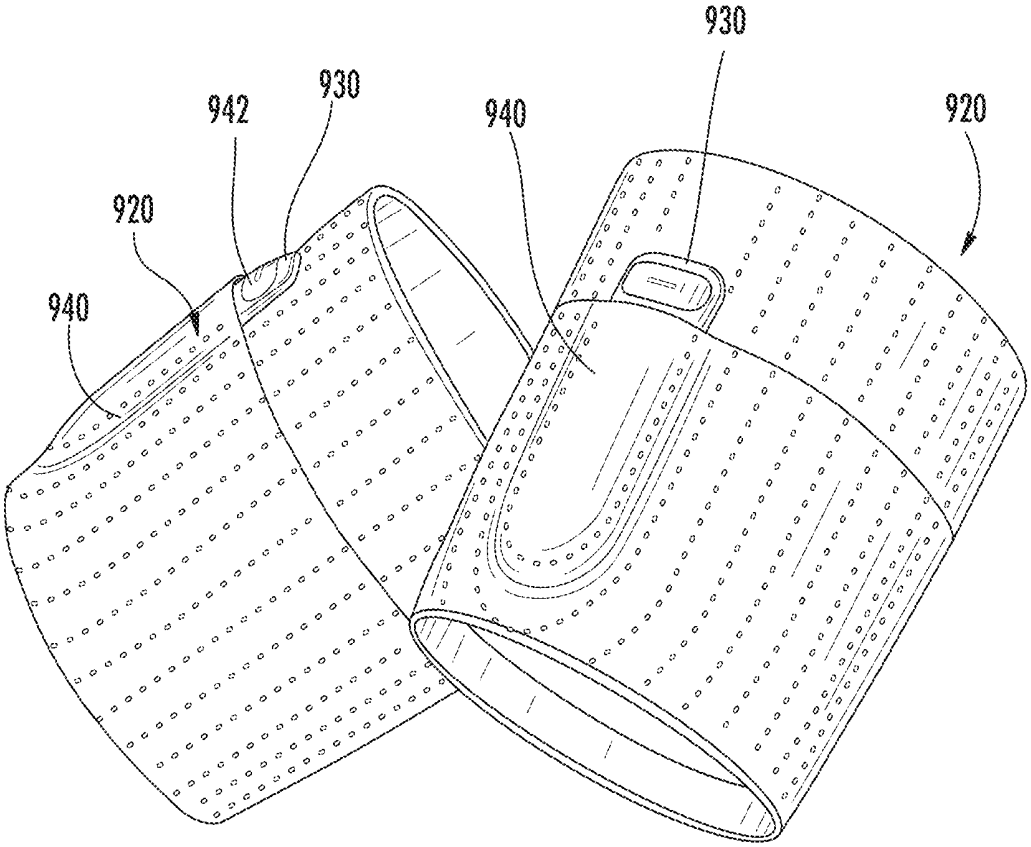


FIG. 15A

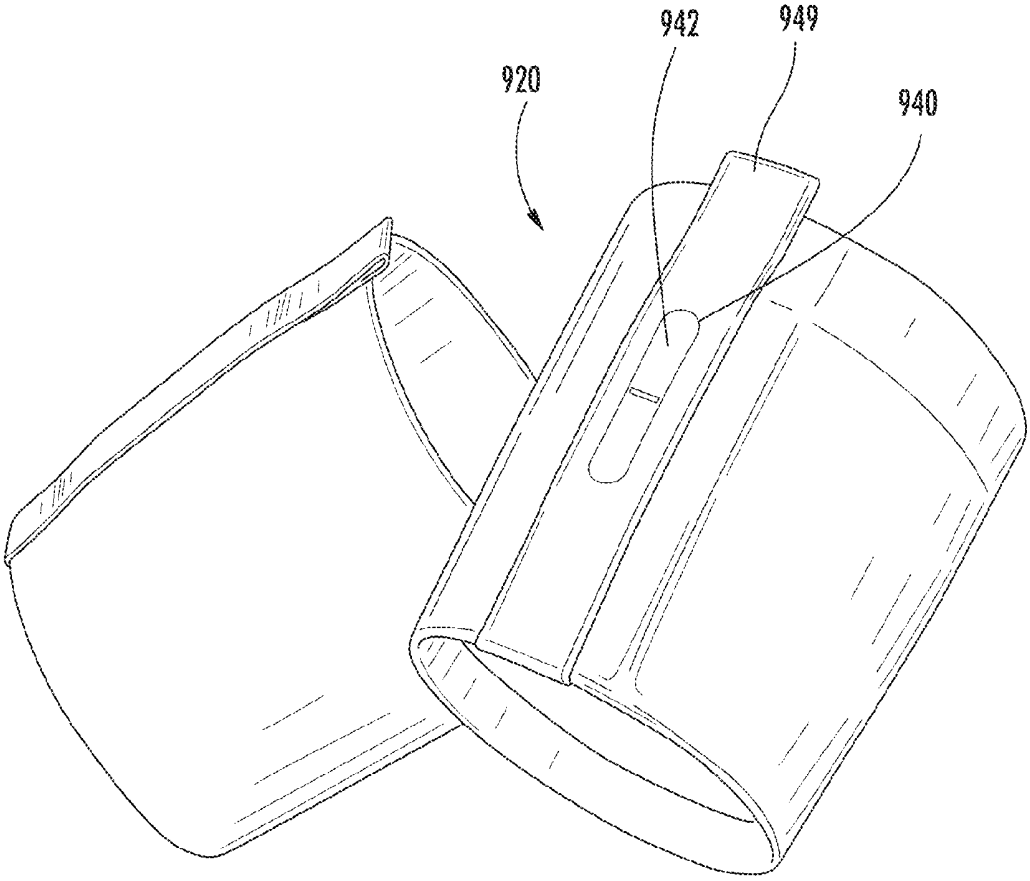


FIG. 15B

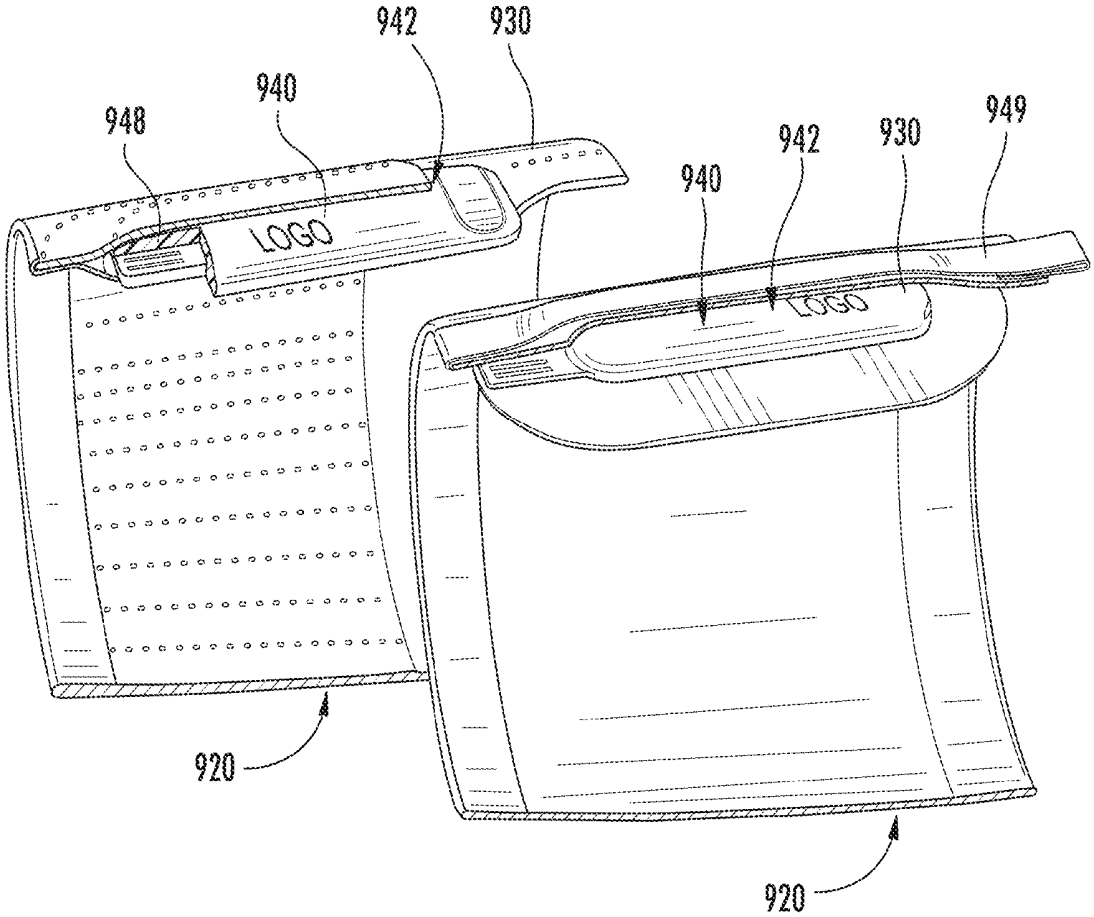


FIG. 16

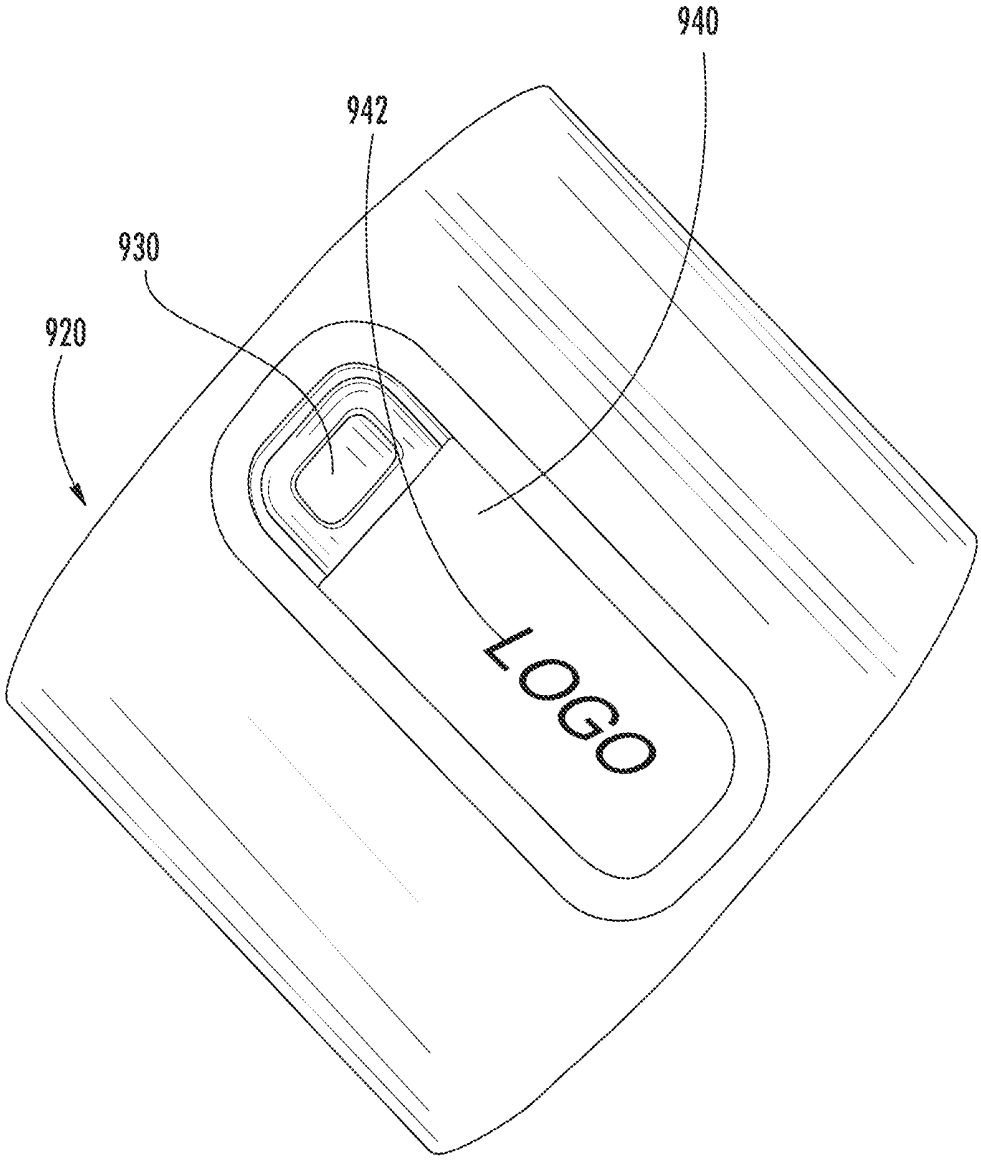


FIG. 17

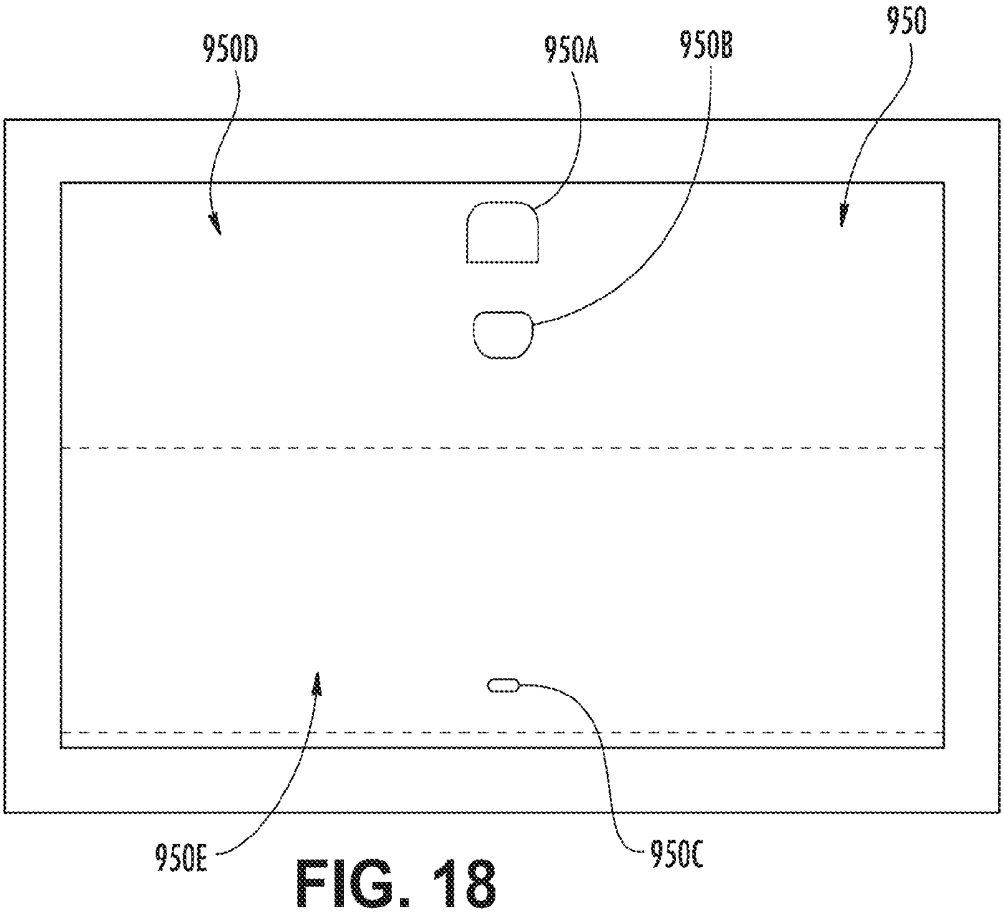


FIG. 18

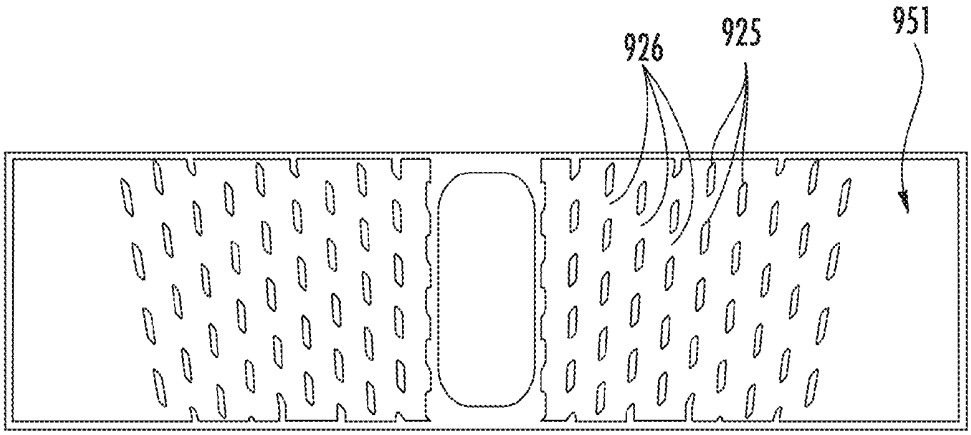


FIG. 19

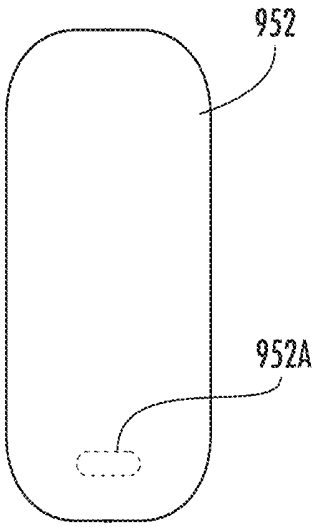


FIG. 20

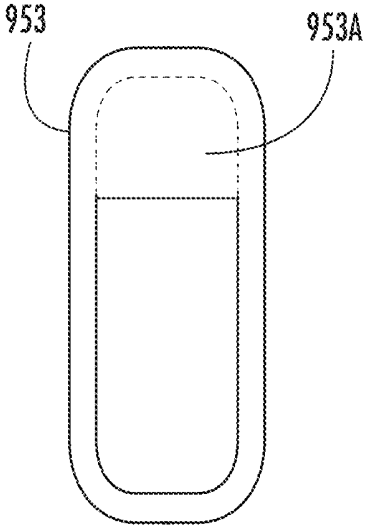


FIG. 21

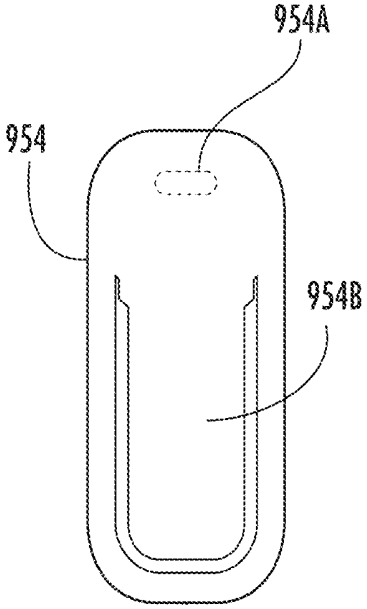


FIG. 22

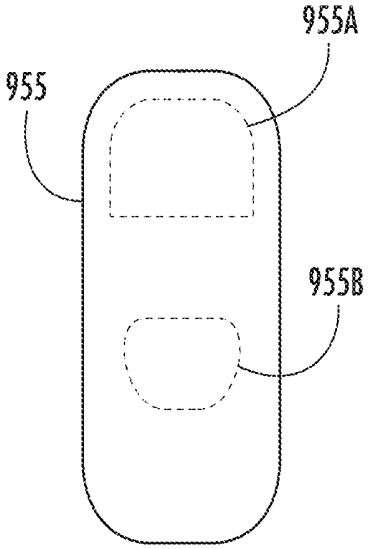


FIG. 23

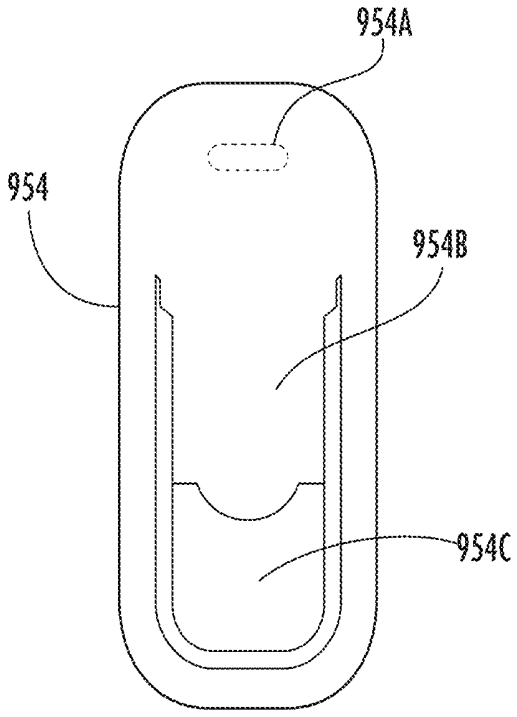


FIG. 24

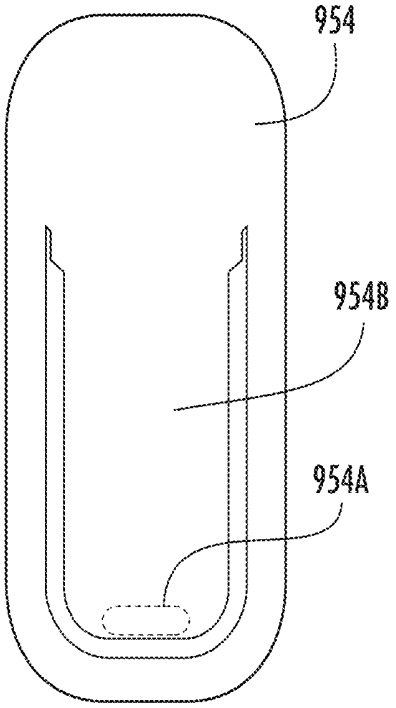


FIG. 25

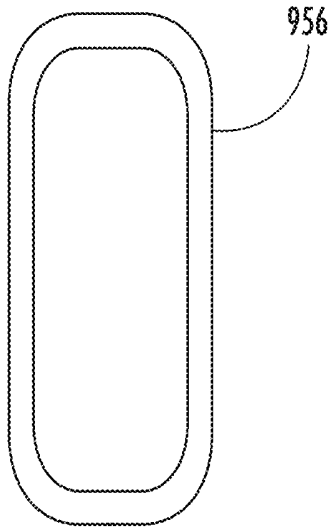


FIG. 26

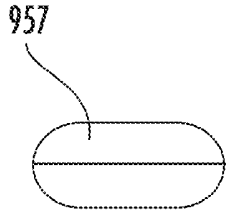


FIG. 27

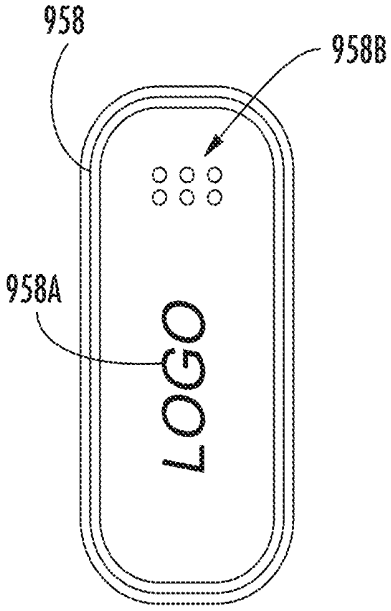


FIG. 28

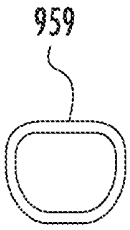


FIG. 29

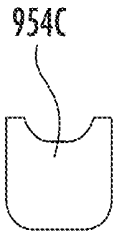


FIG. 30

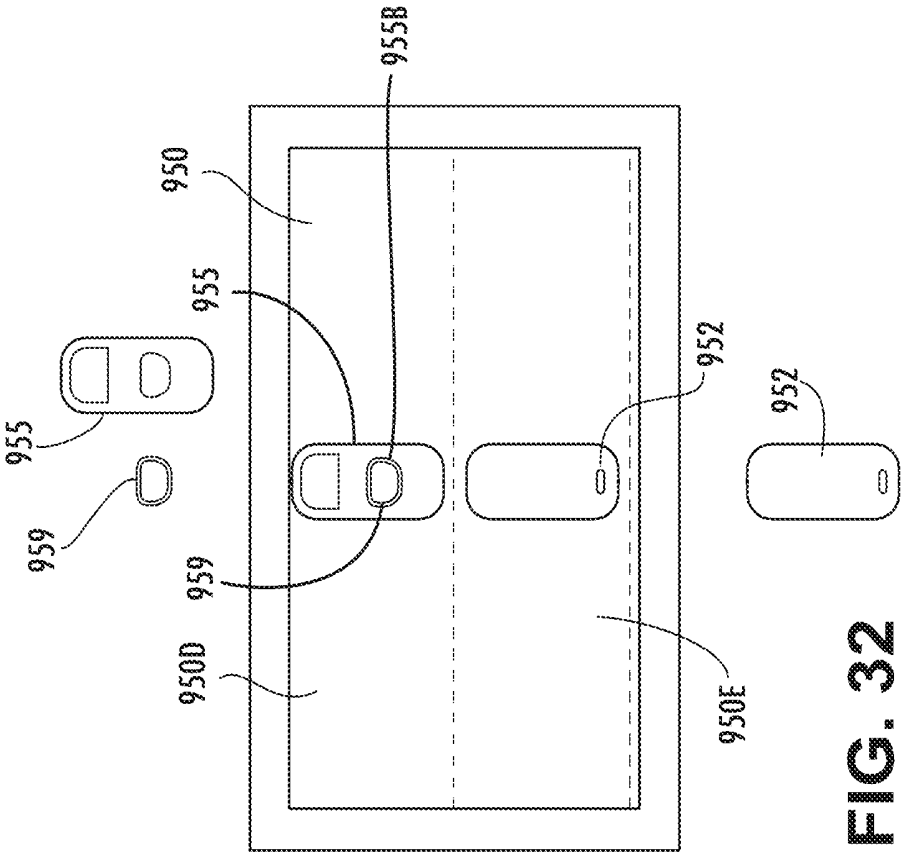
955B
950
955
955
959
959
950D
952
952
950E

FIG. 32

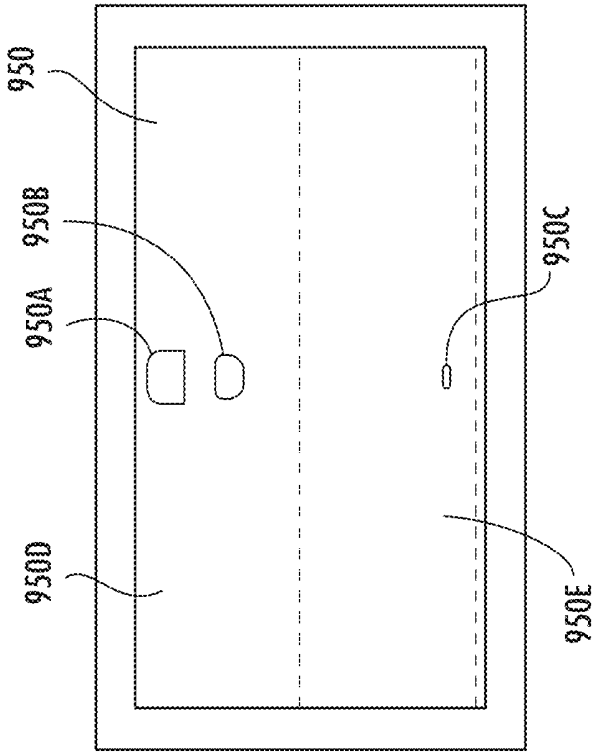
950
950B
950A
950D
950C
950E

FIG. 31

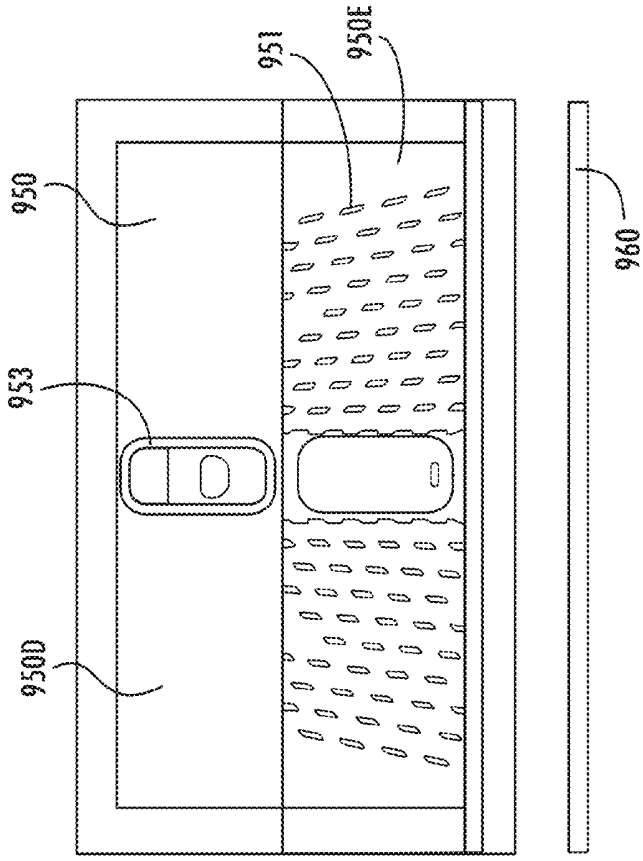


FIG. 34

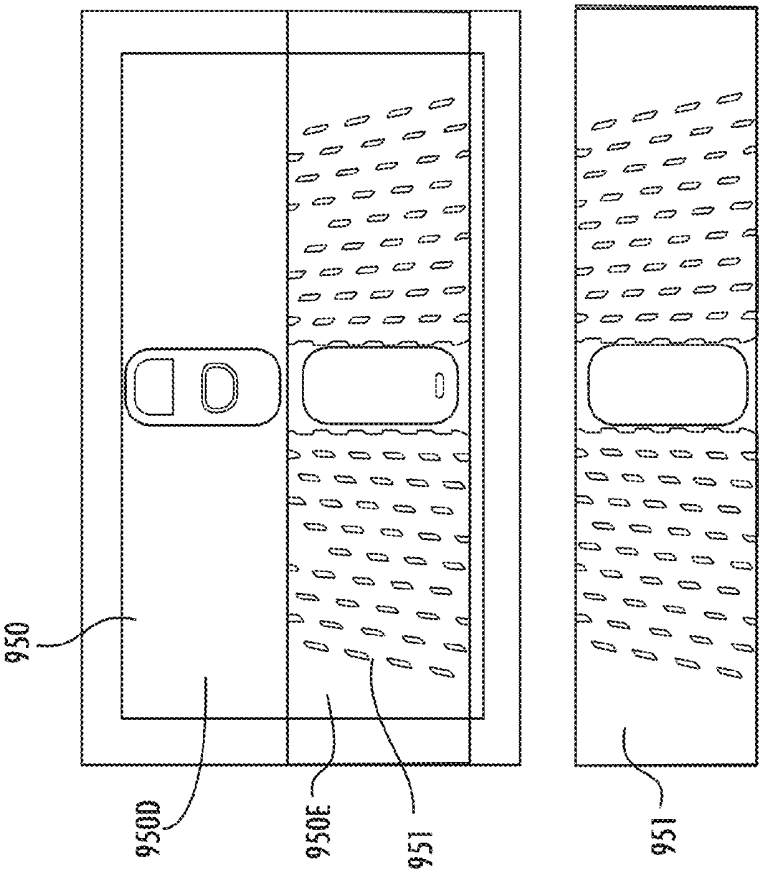


FIG. 33

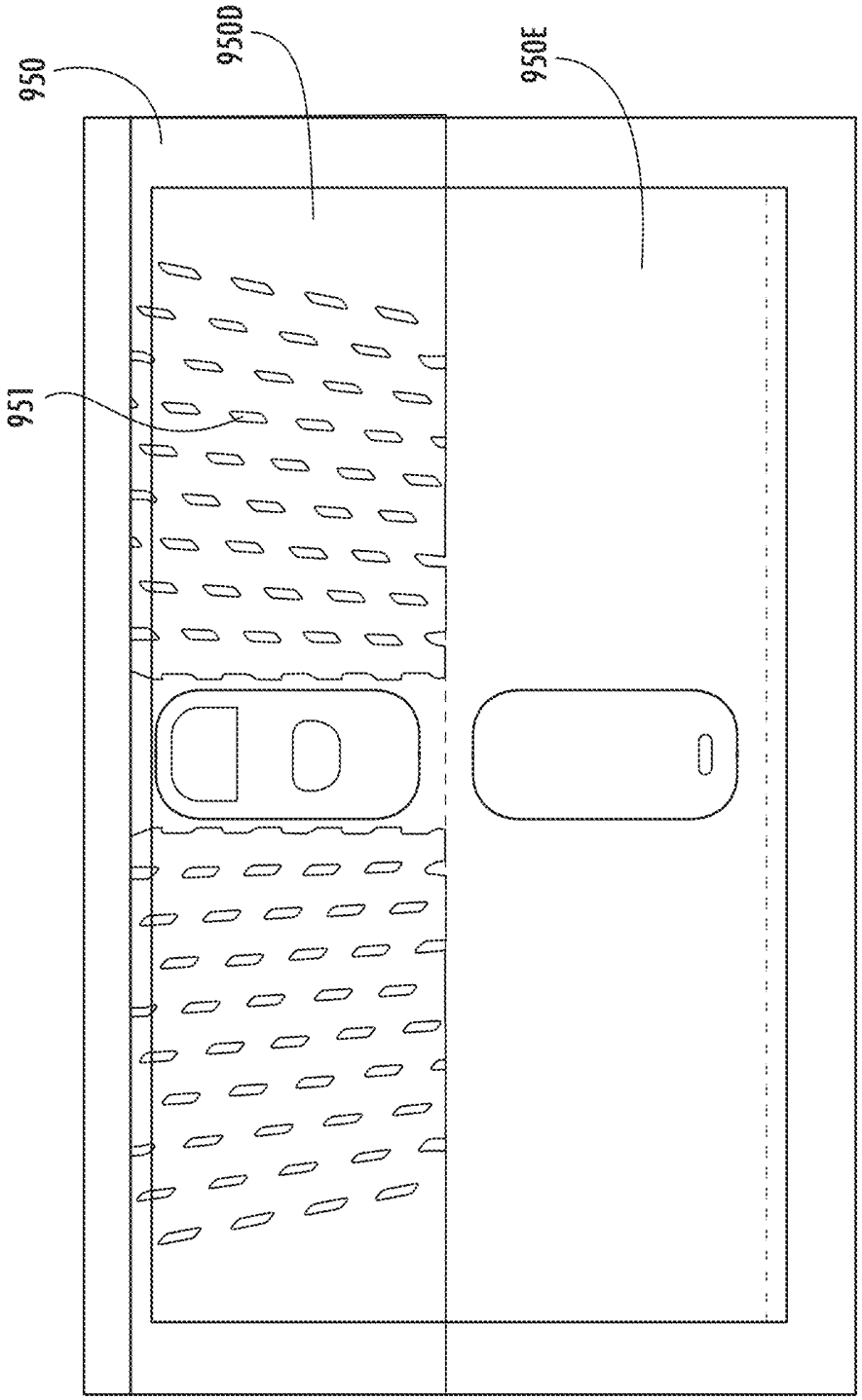


FIG. 35

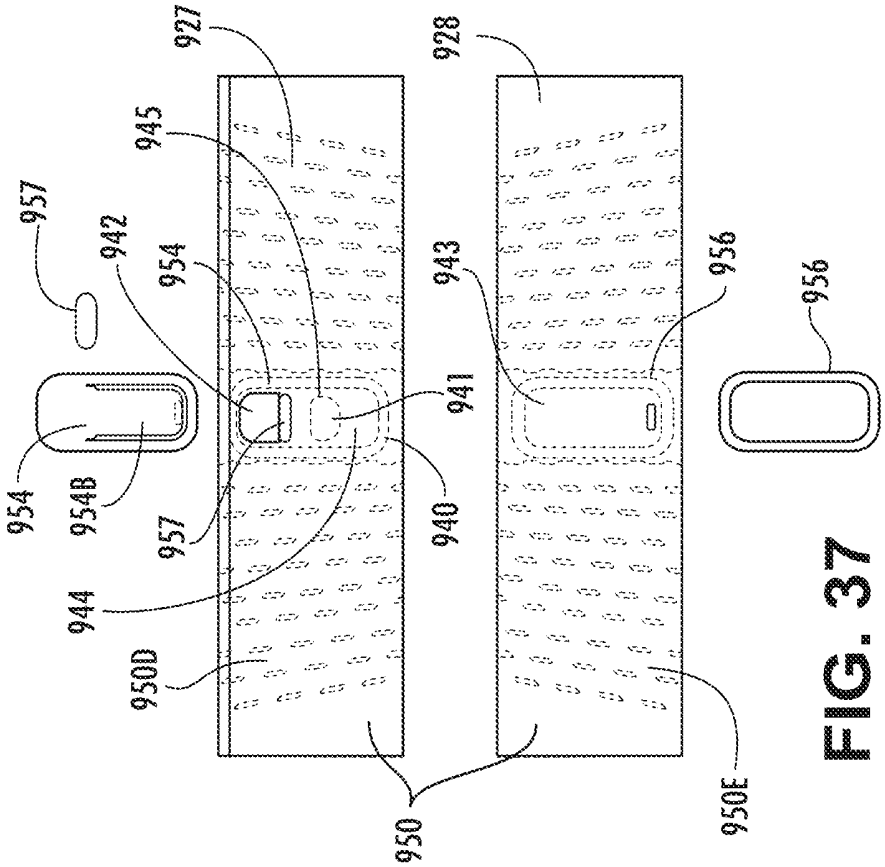
927
928
945
957
942
954
943
956
956
941
954
954B
957
940
944
950D
950
950E

FIG. 37

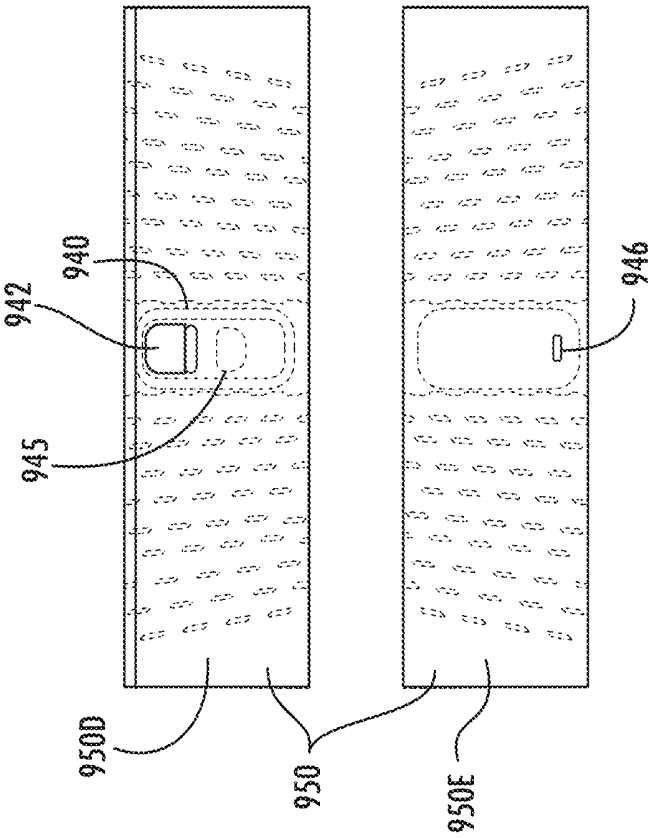
940
942
946
945
950D
950
950E

FIG. 36

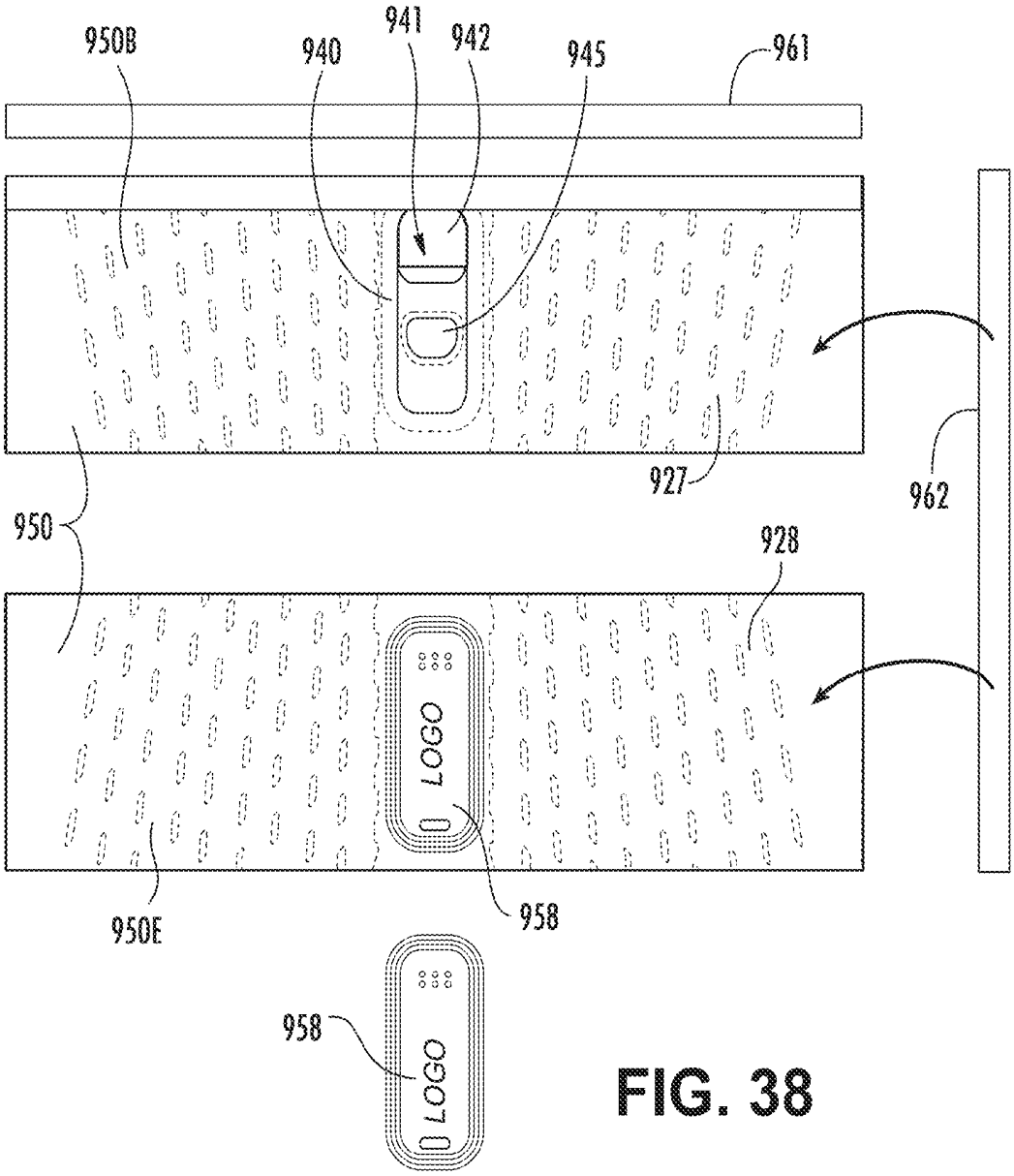


FIG. 38

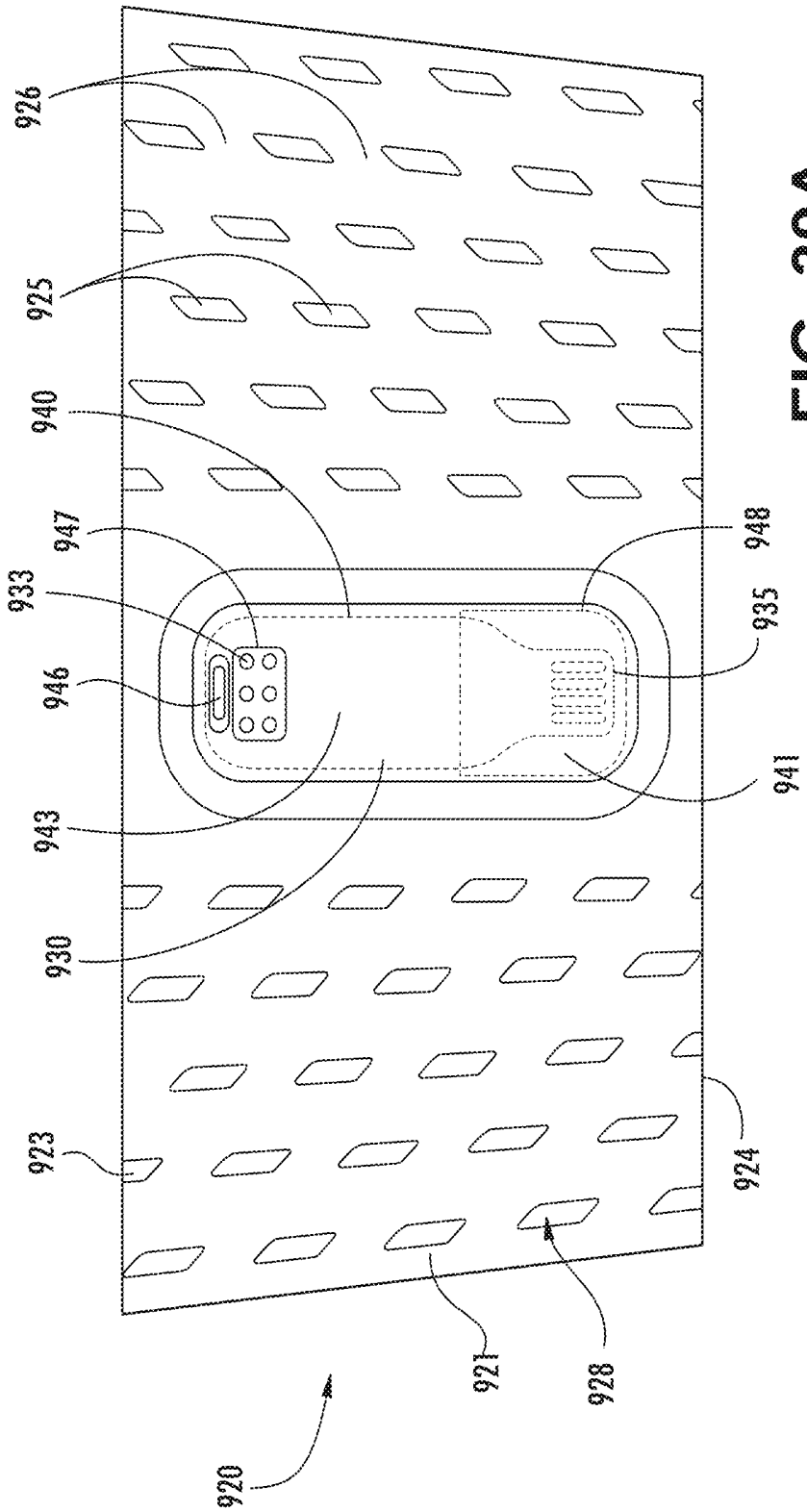


FIG. 39A

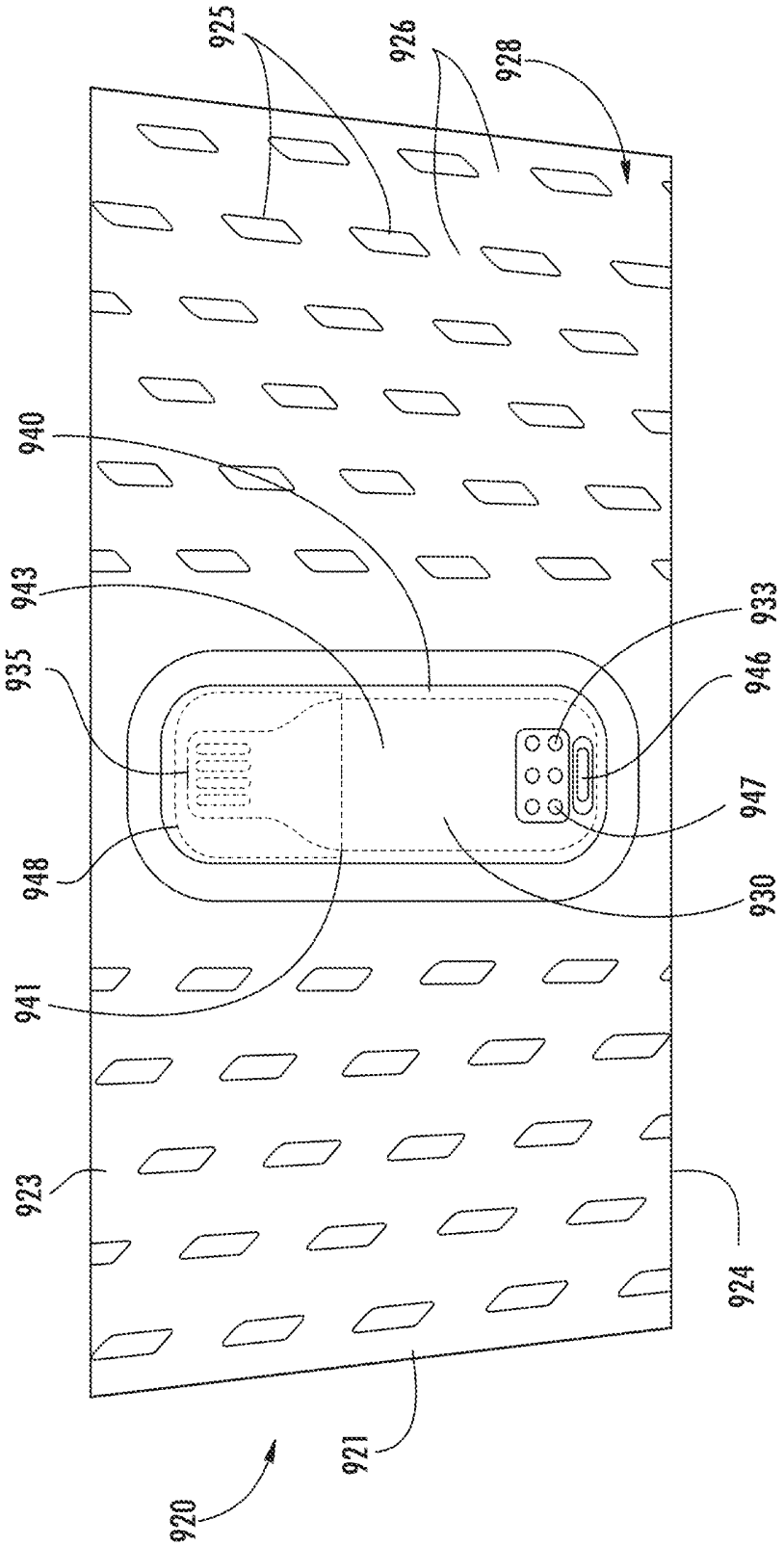


FIG. 39B

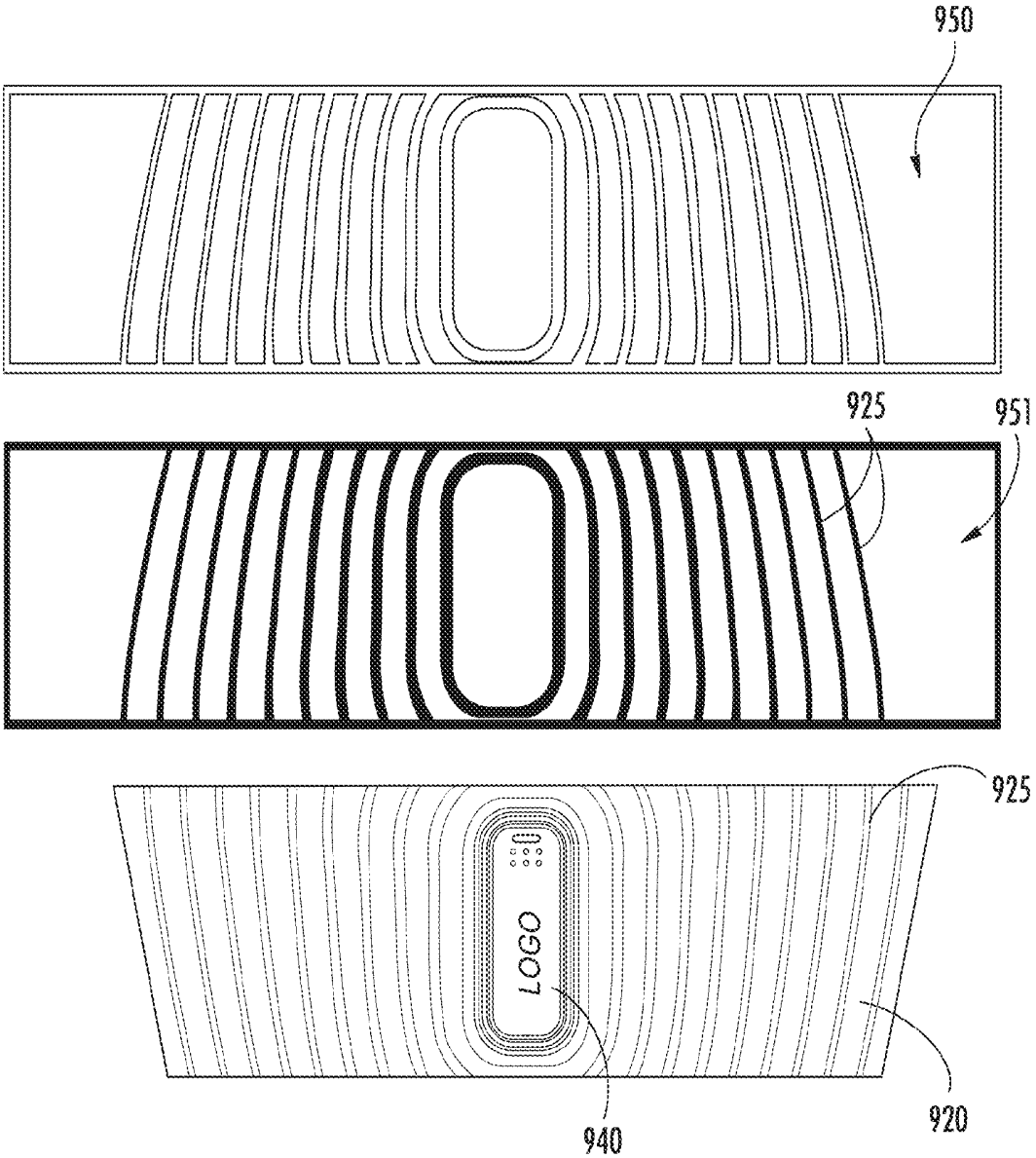


FIG. 40A

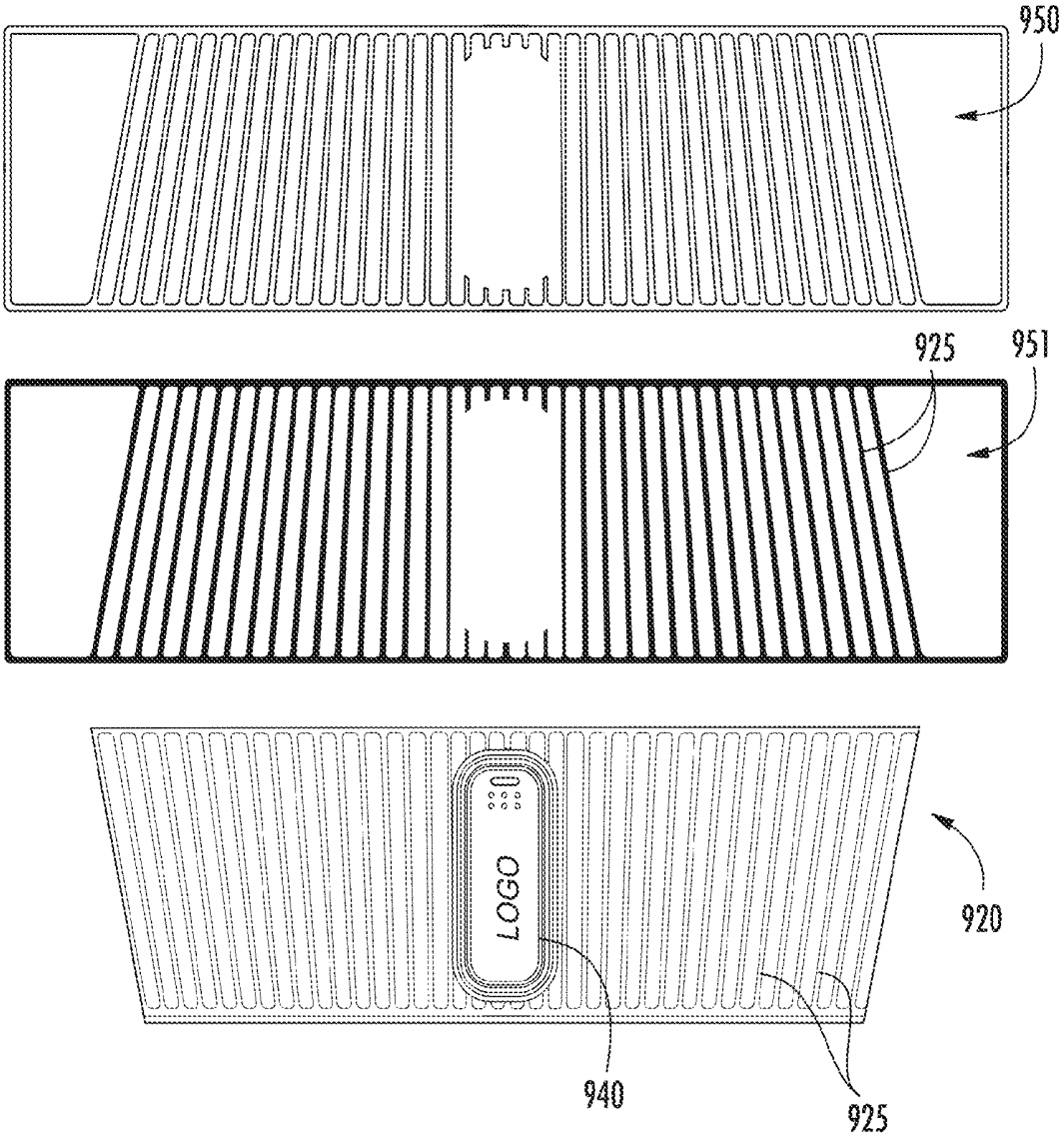


FIG. 40B

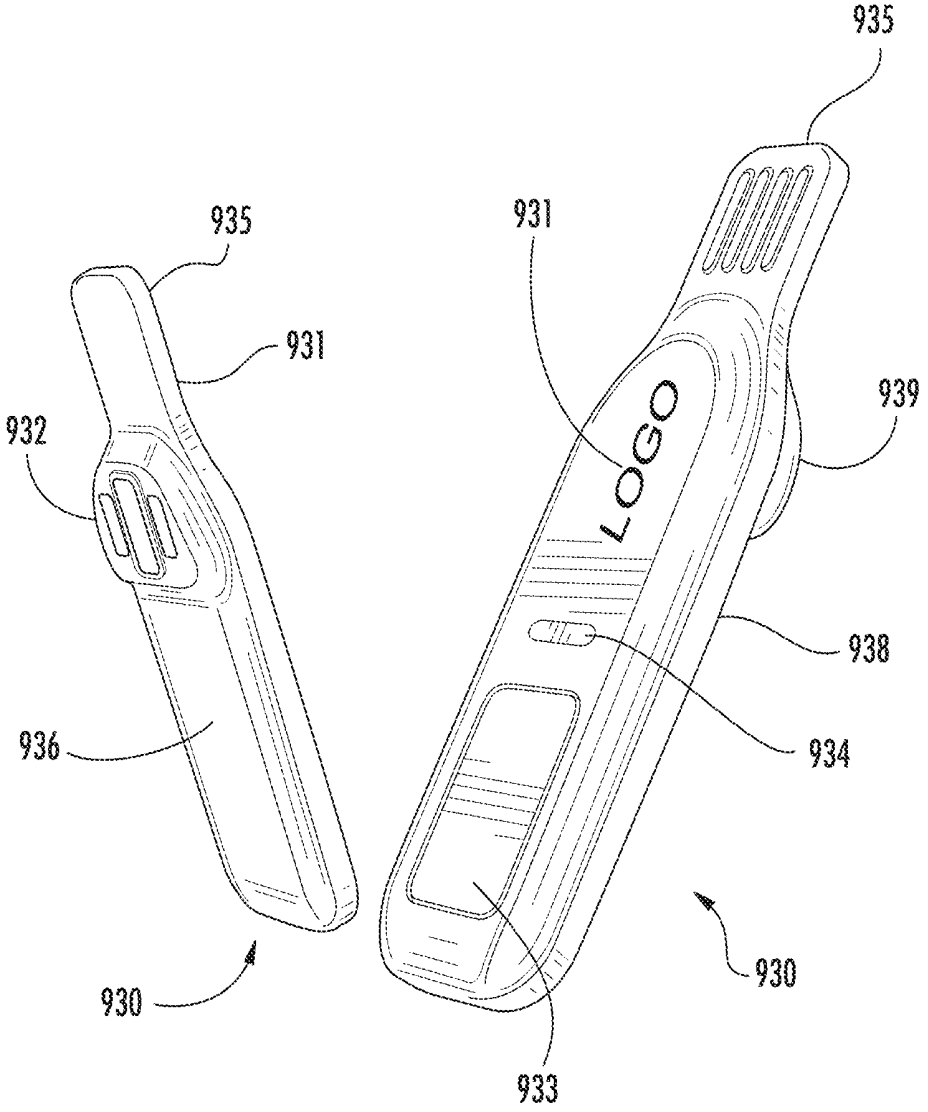


FIG. 41

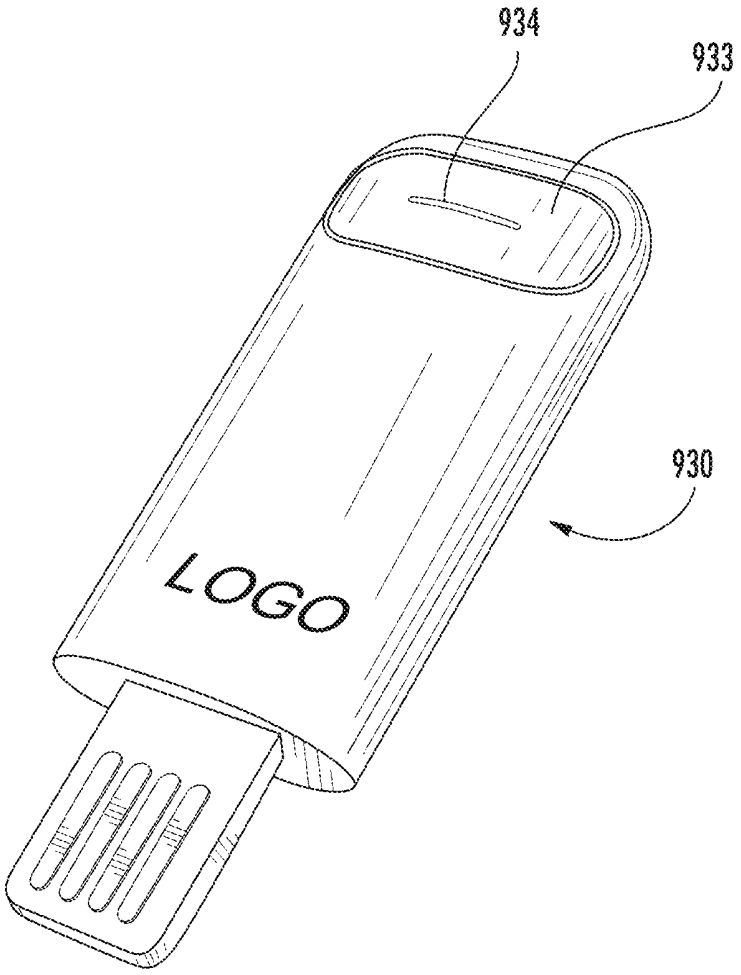


FIG. 42

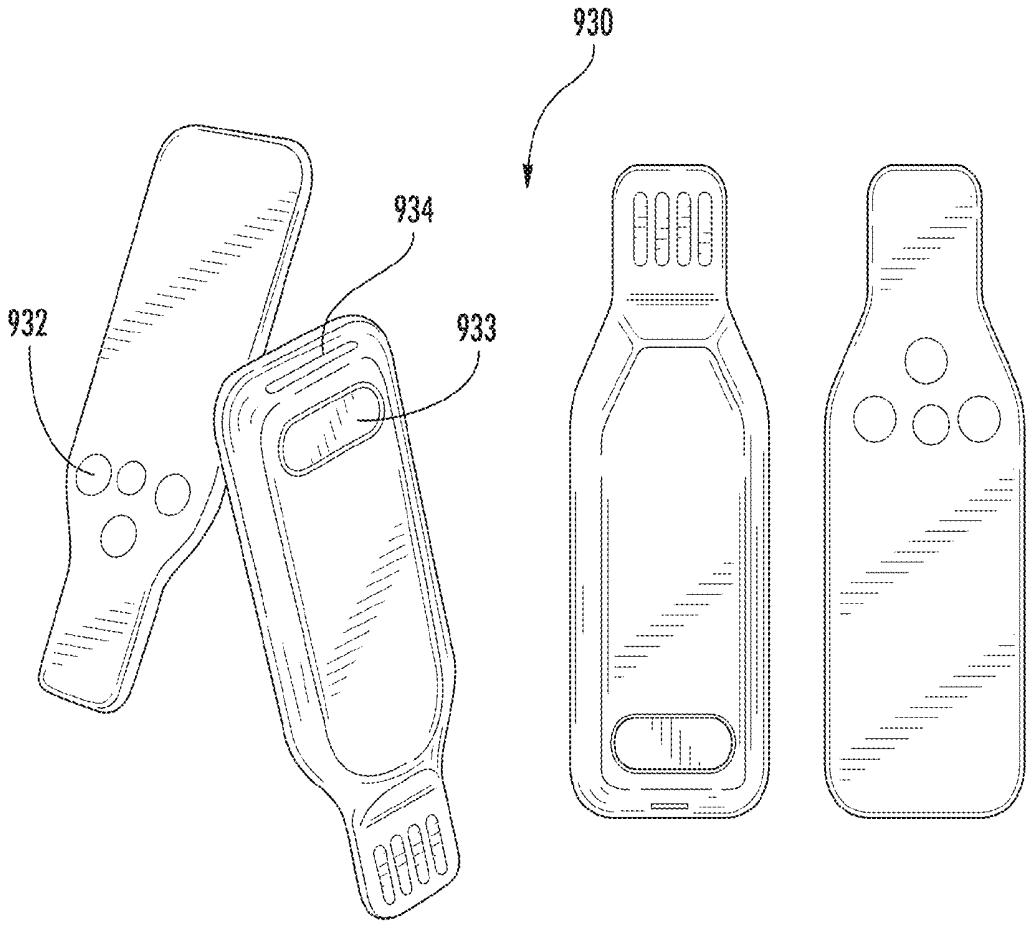


FIG. 43

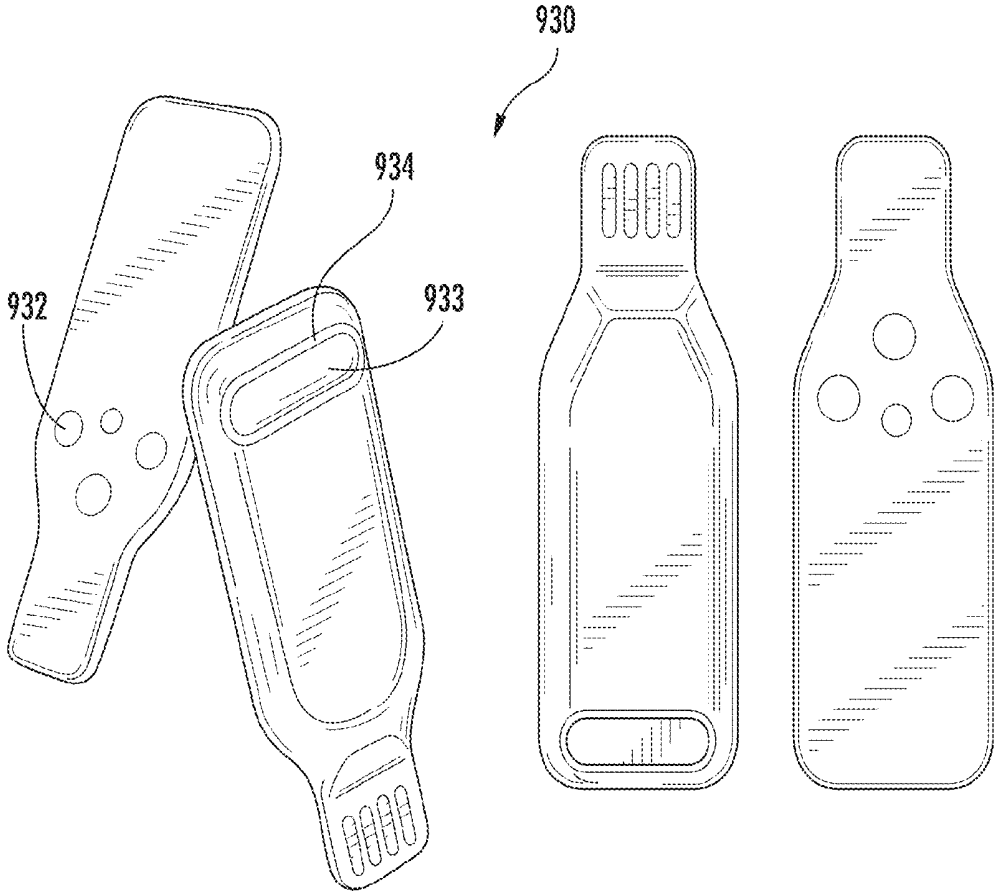


FIG. 44

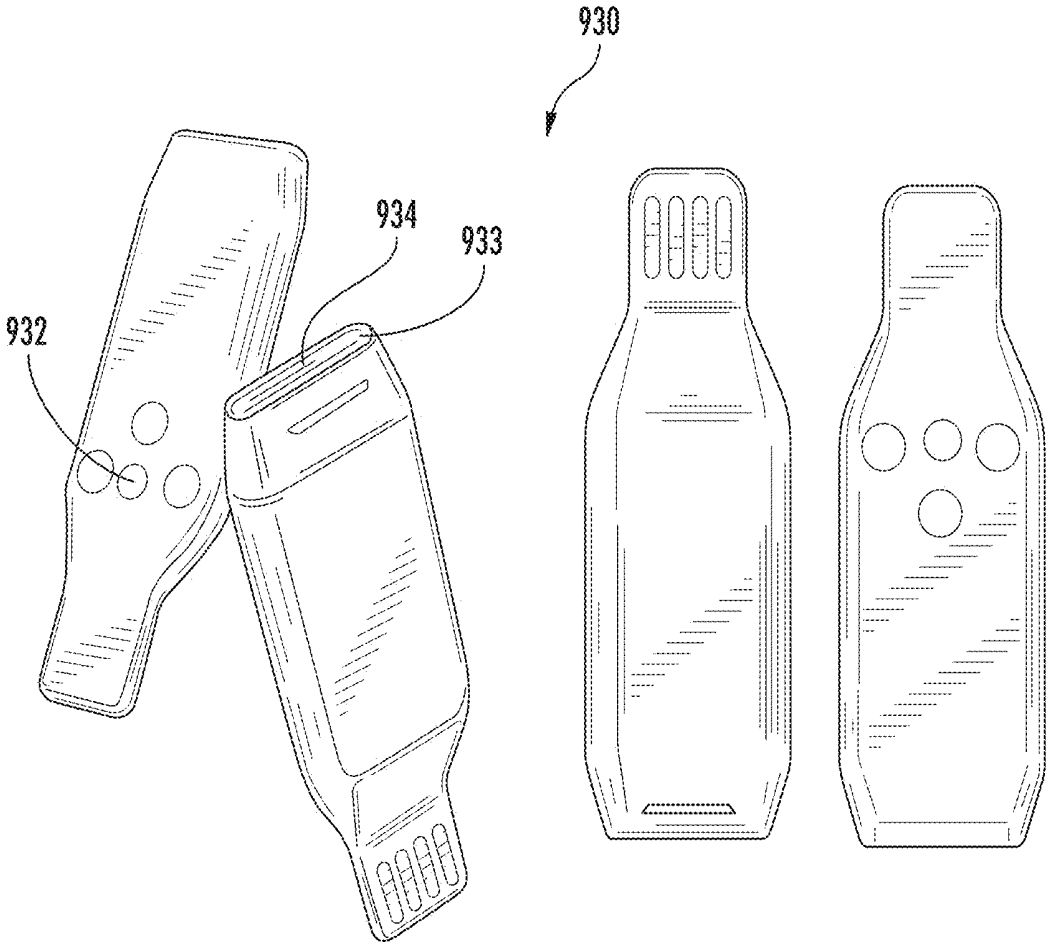


FIG. 45

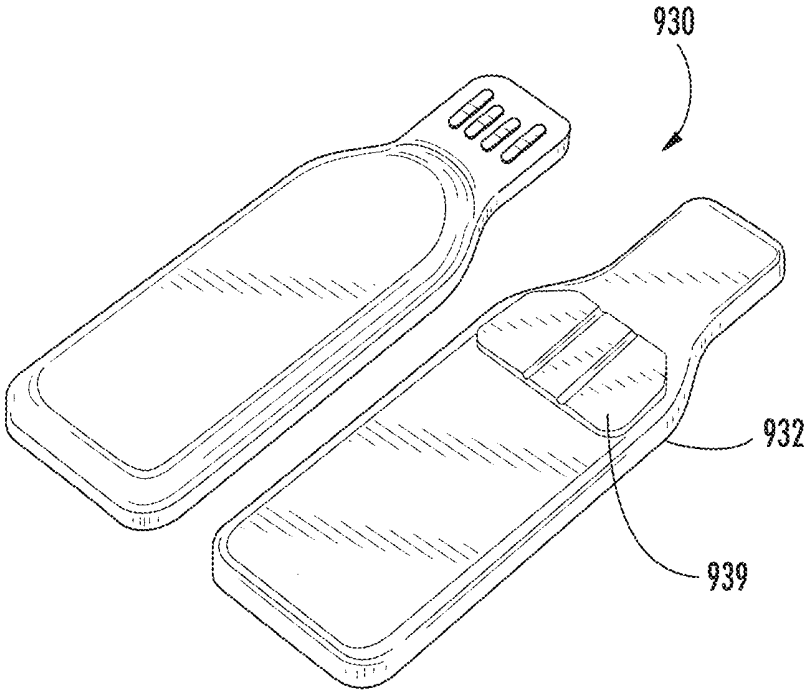


FIG. 46

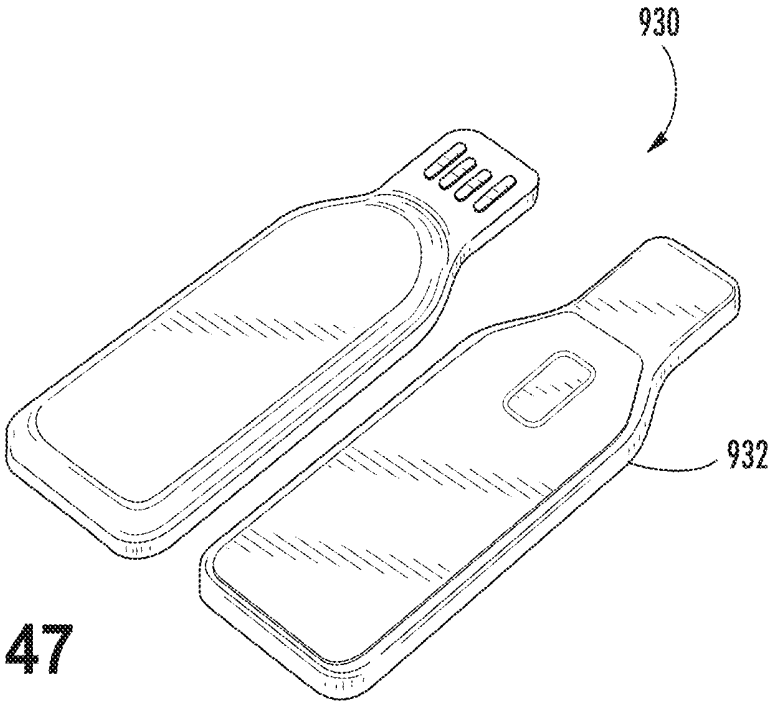


FIG. 47

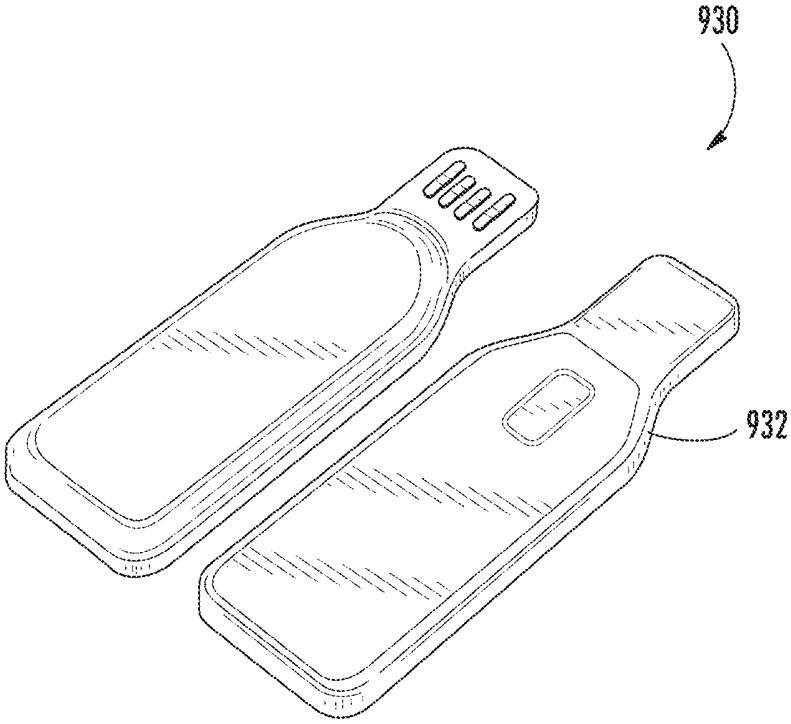


FIG. 48

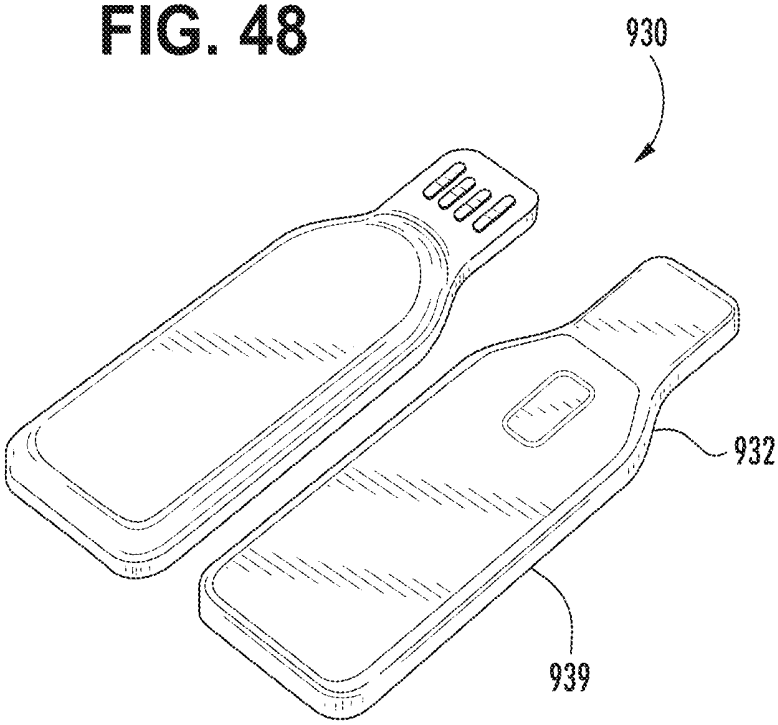


FIG. 49

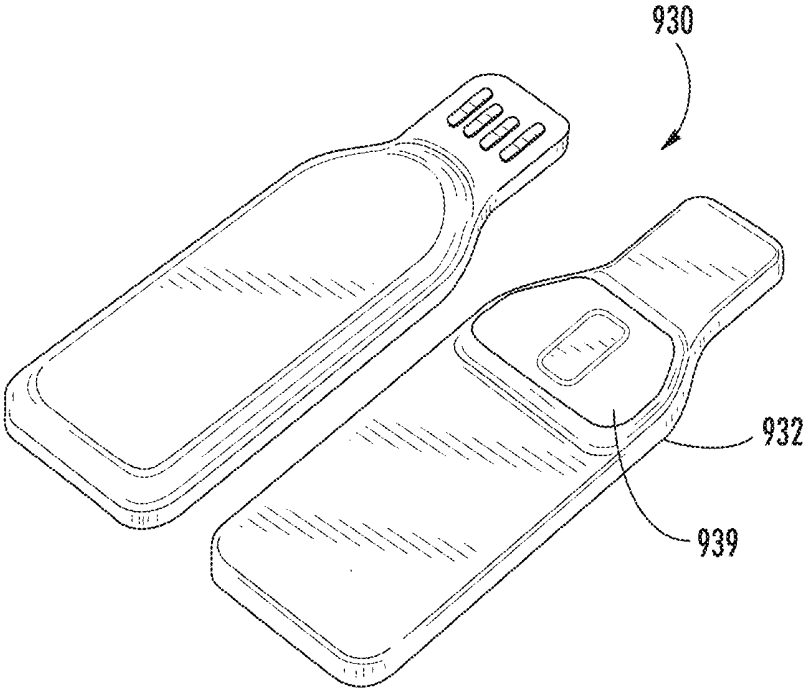


FIG. 50

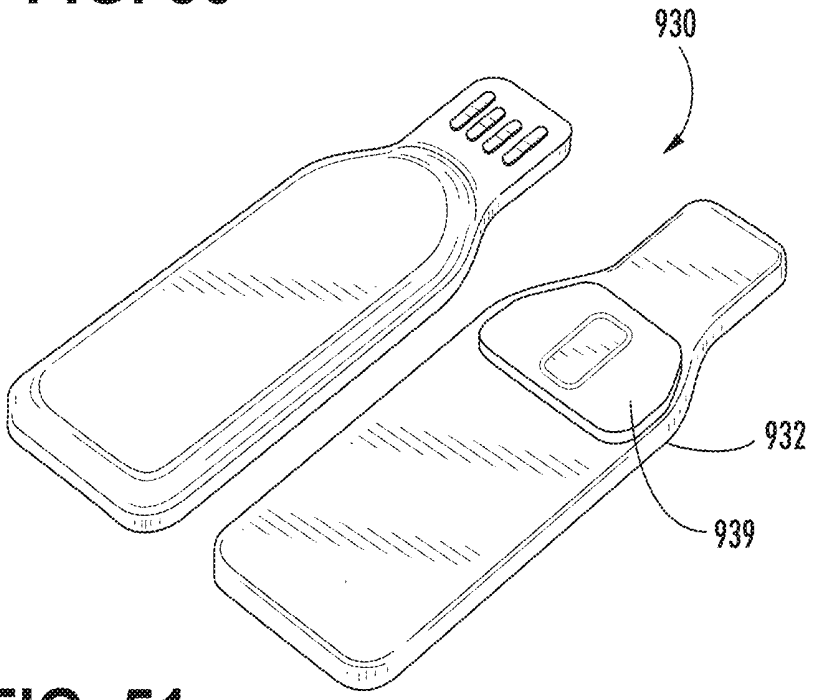


FIG. 51

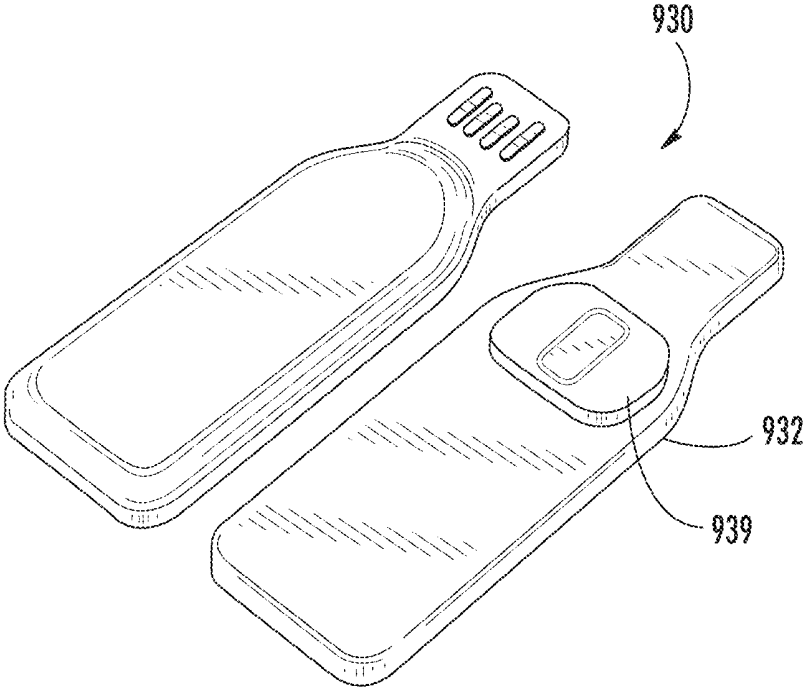


FIG. 52

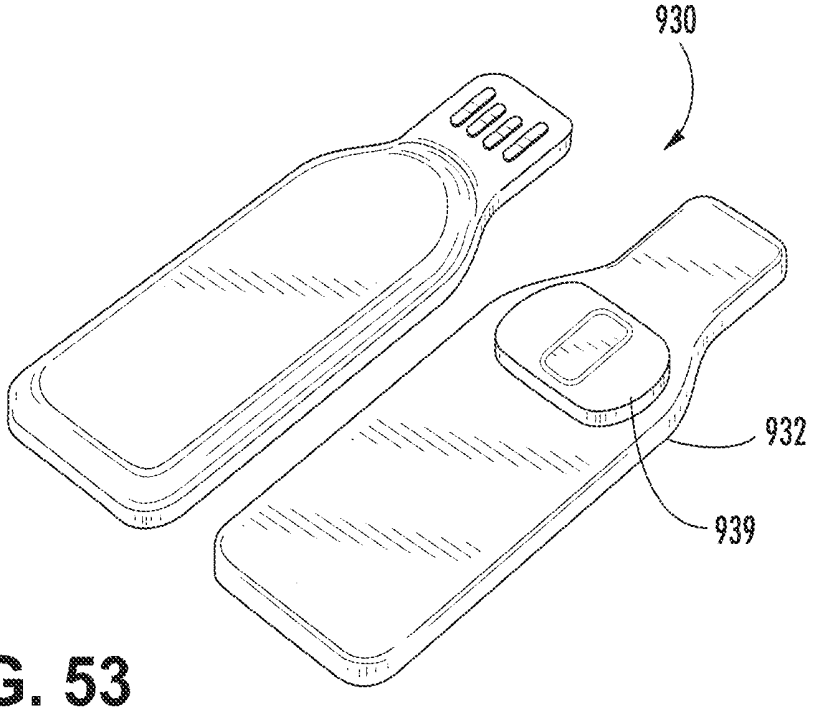


FIG. 53

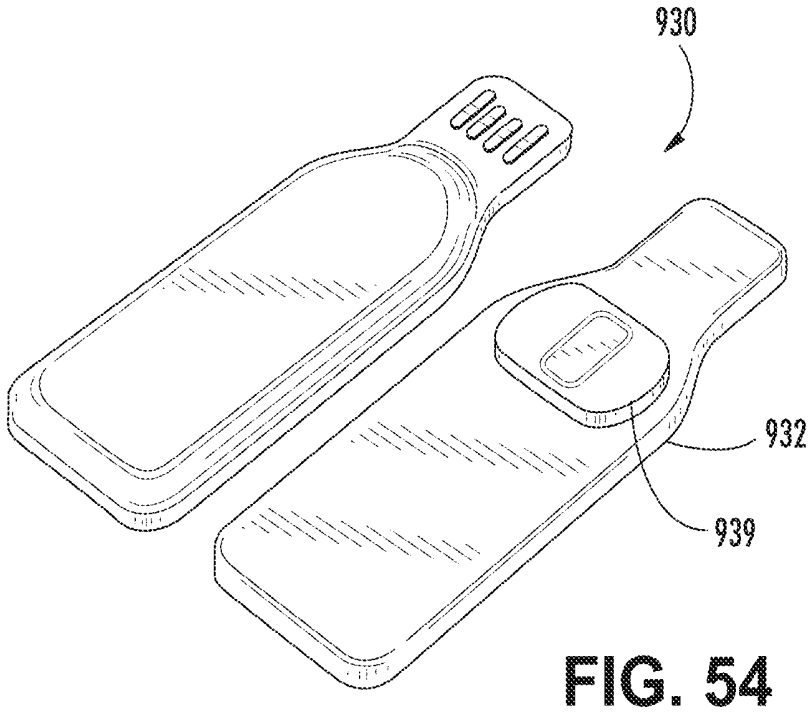


FIG. 54

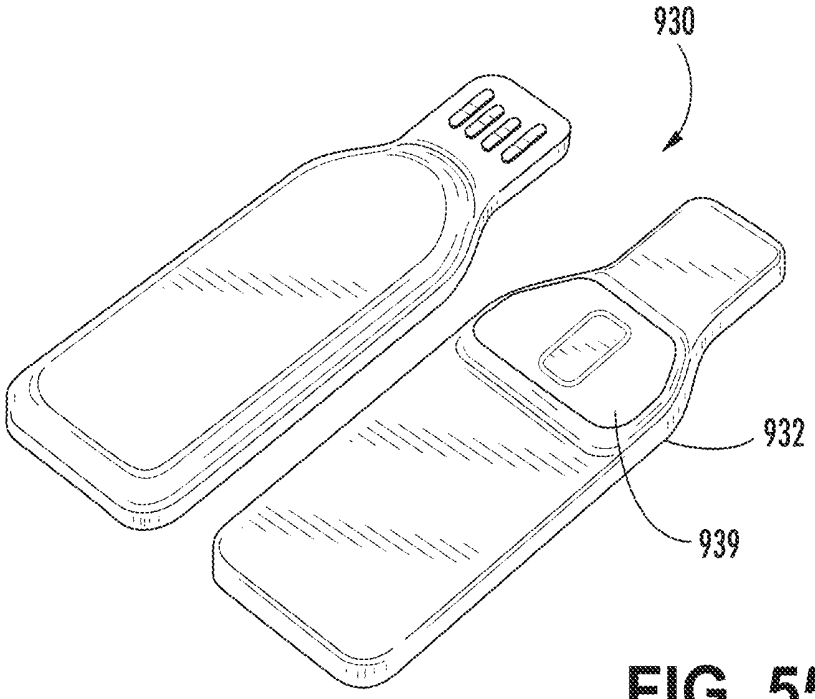


FIG. 55

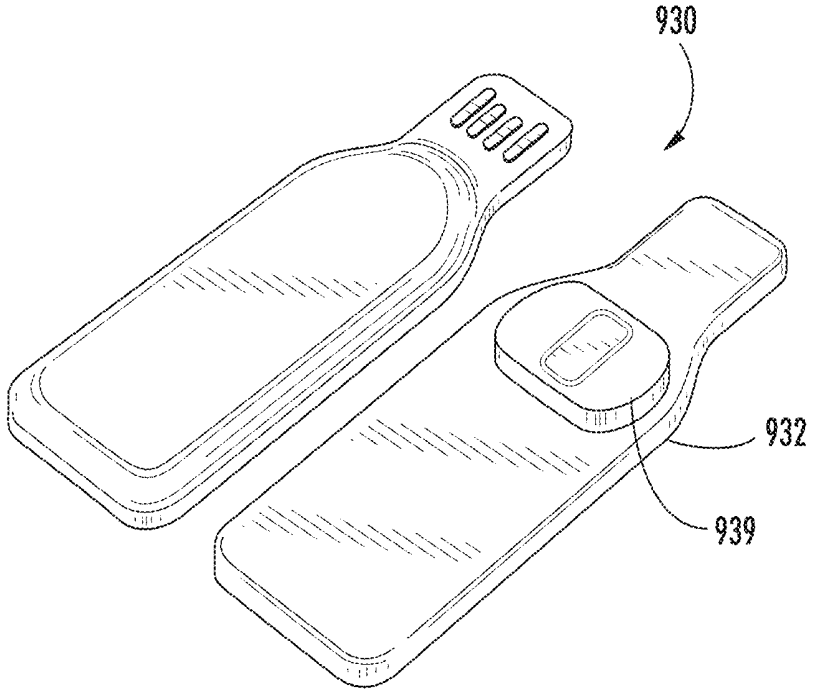


FIG. 56

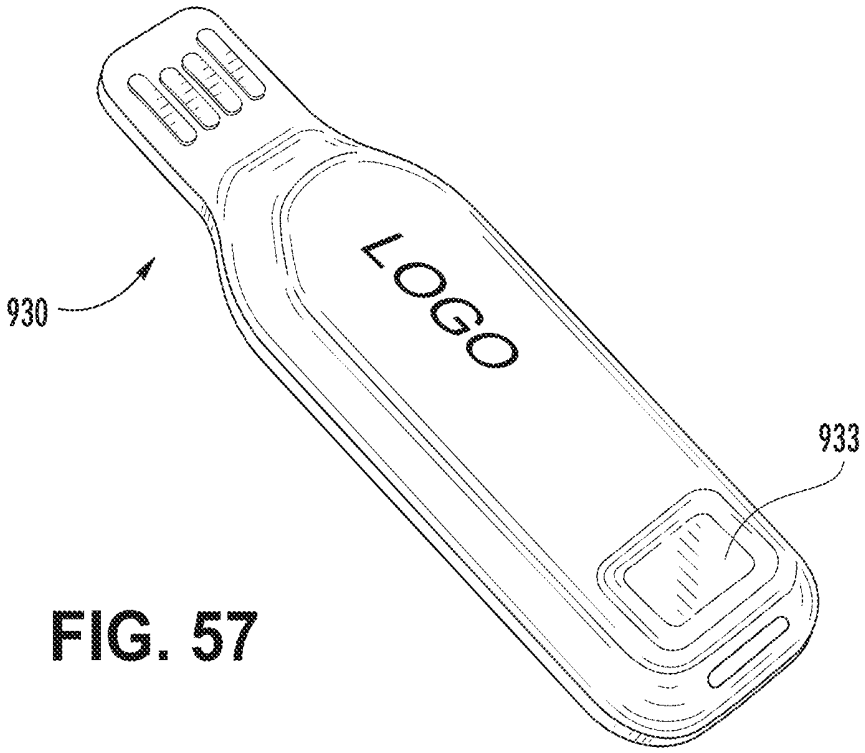


FIG. 57

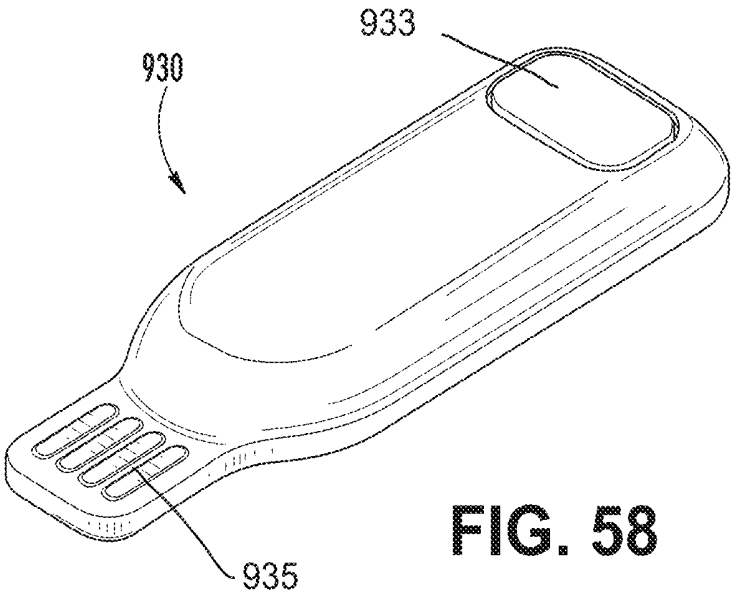


FIG. 58

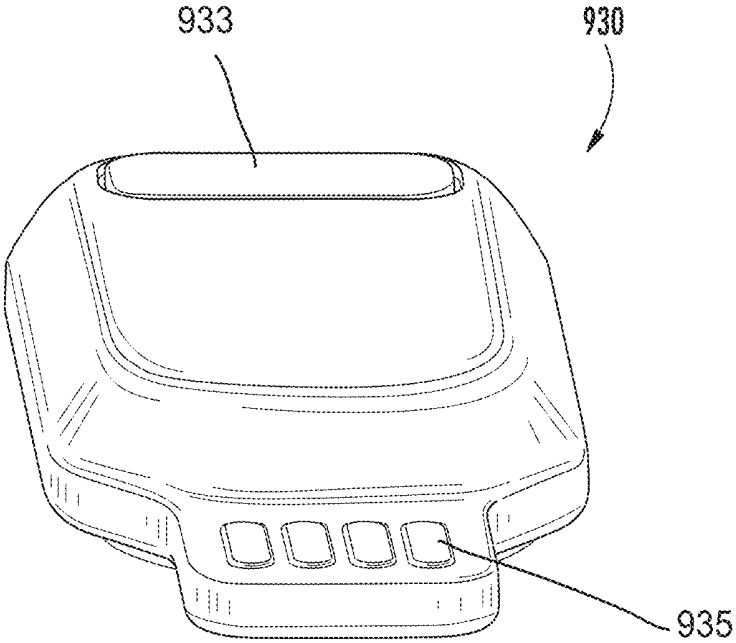


FIG. 59

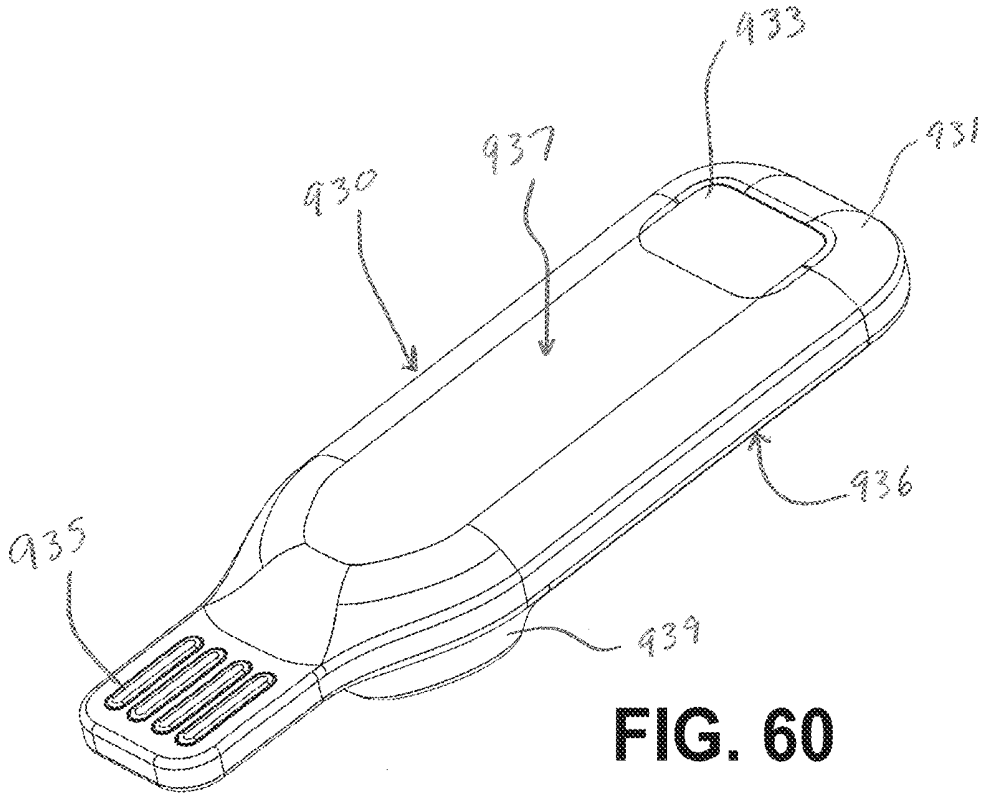


FIG. 60

FIG. 61

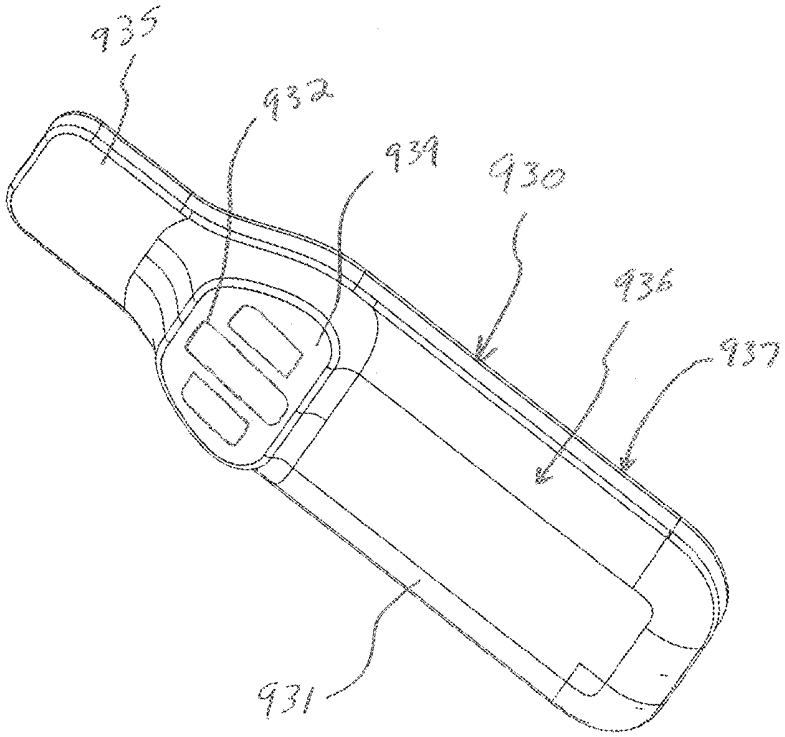

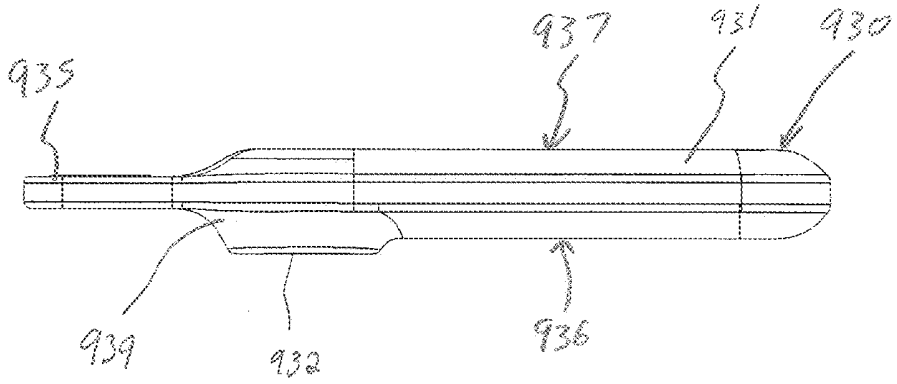


FIG. 62

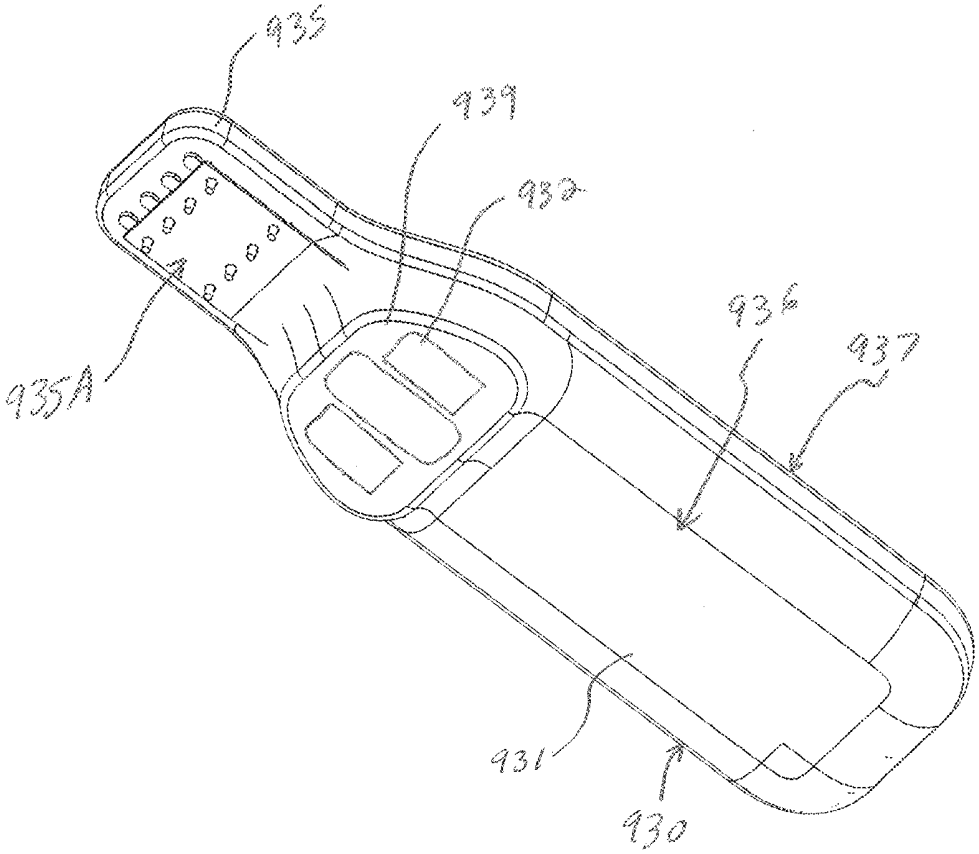


FIG. 63

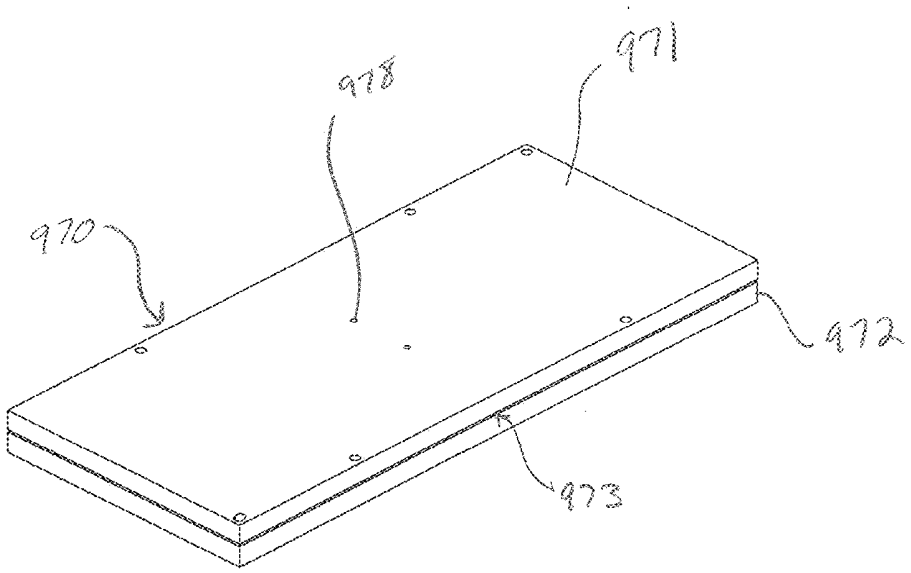


FIG. 64

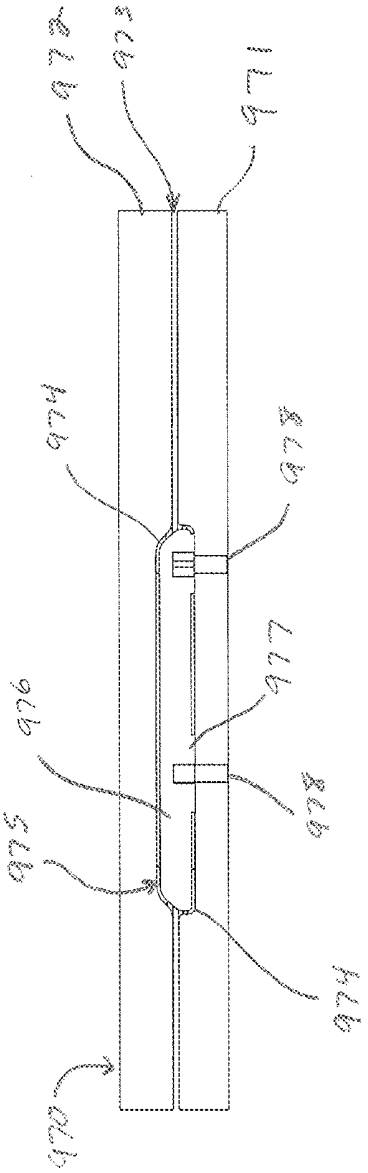


FIG. 65

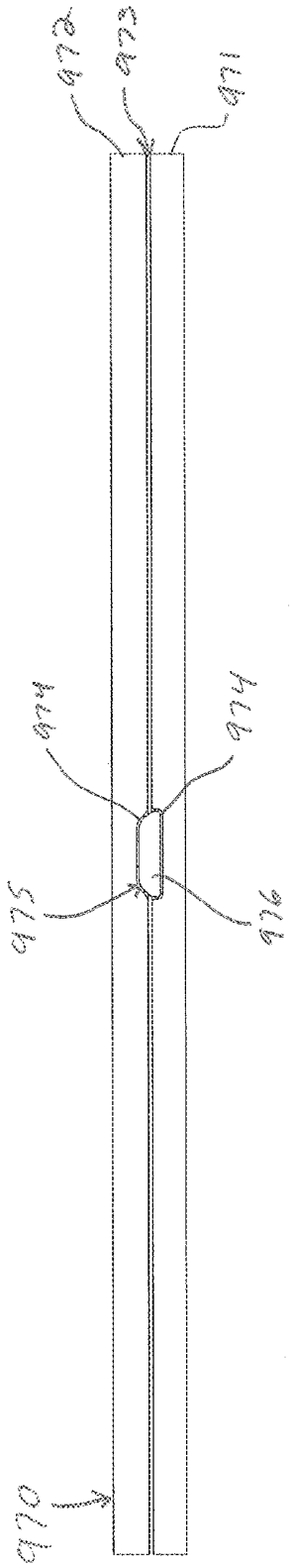


FIG. 66

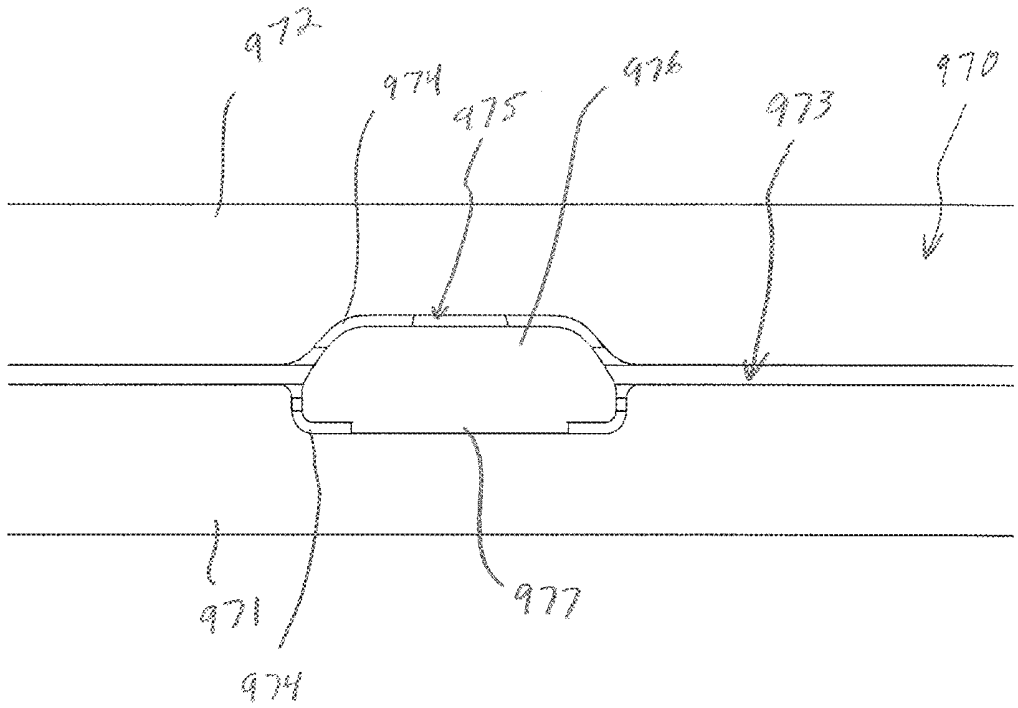


FIG. 67

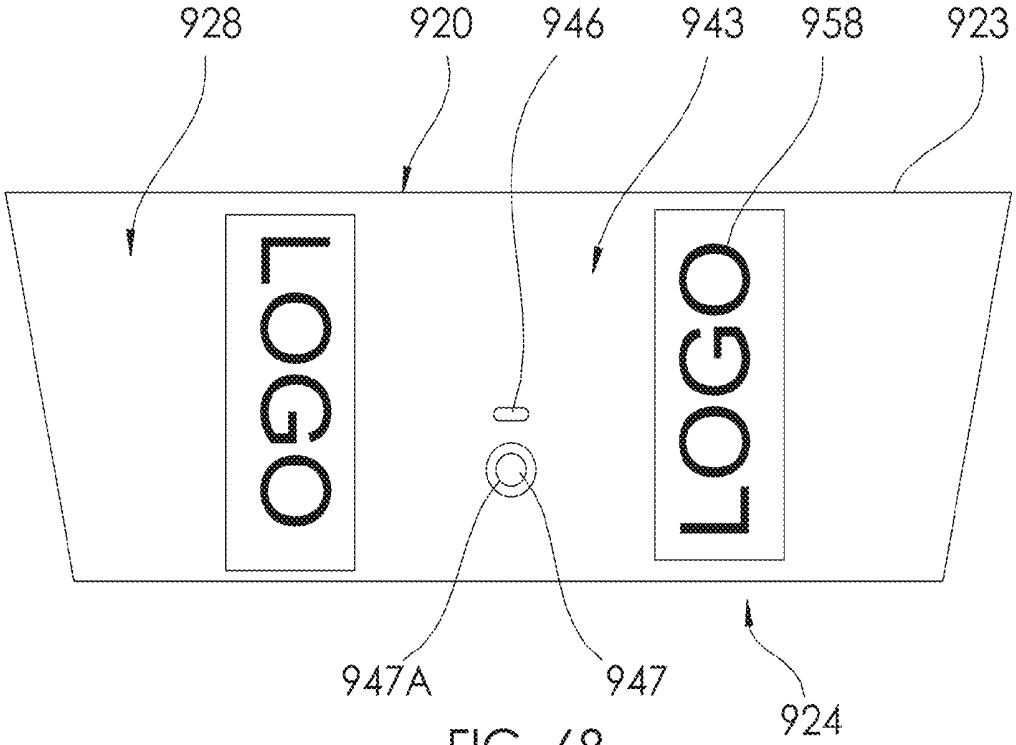
928
920
946
943
958
923
LOGO
LOGO
947A
947
924

FIG. 68

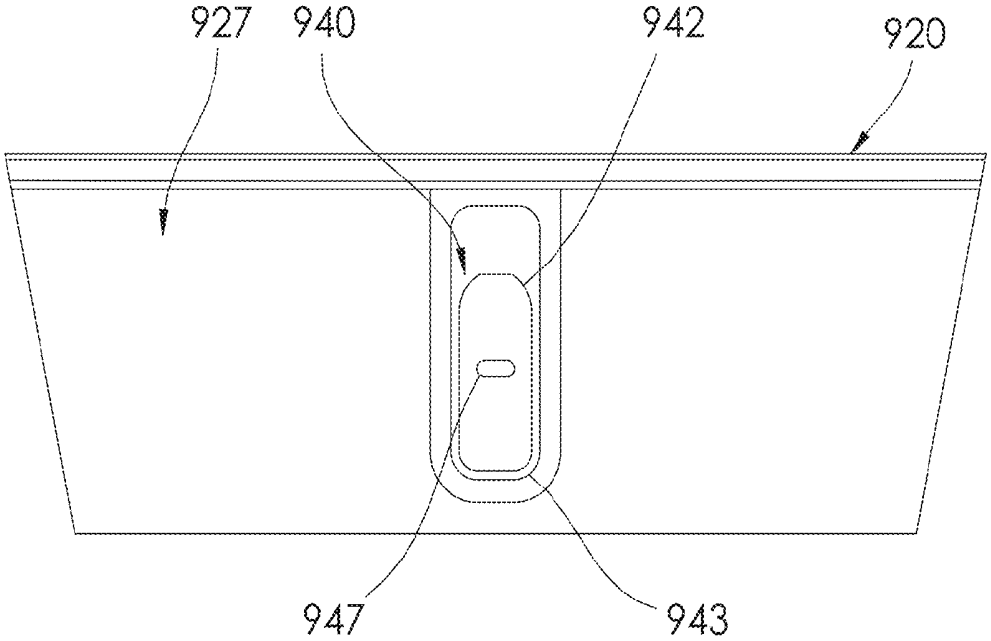
927
940
942
920
947
943

FIG. 69

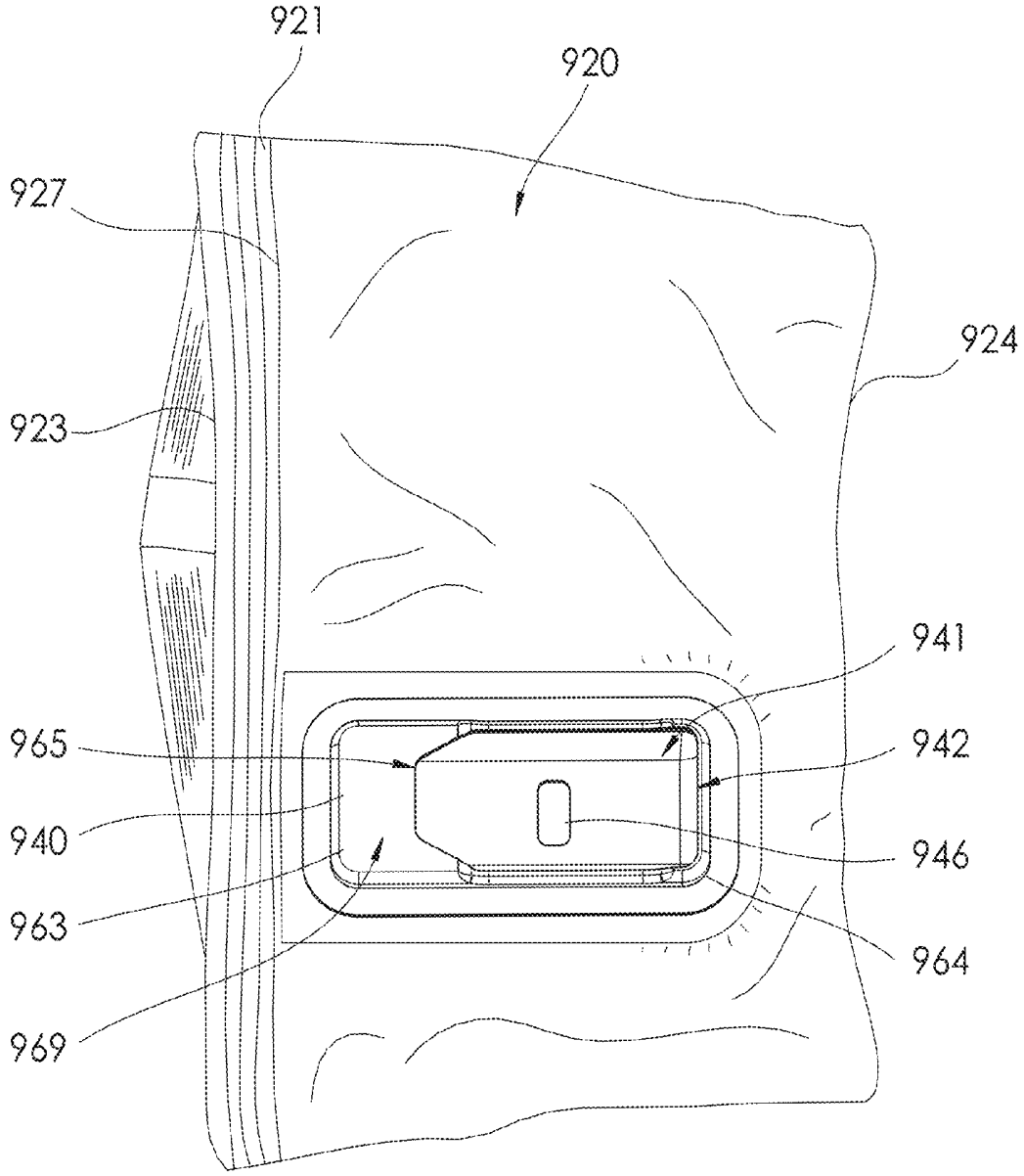


FIG. 70A

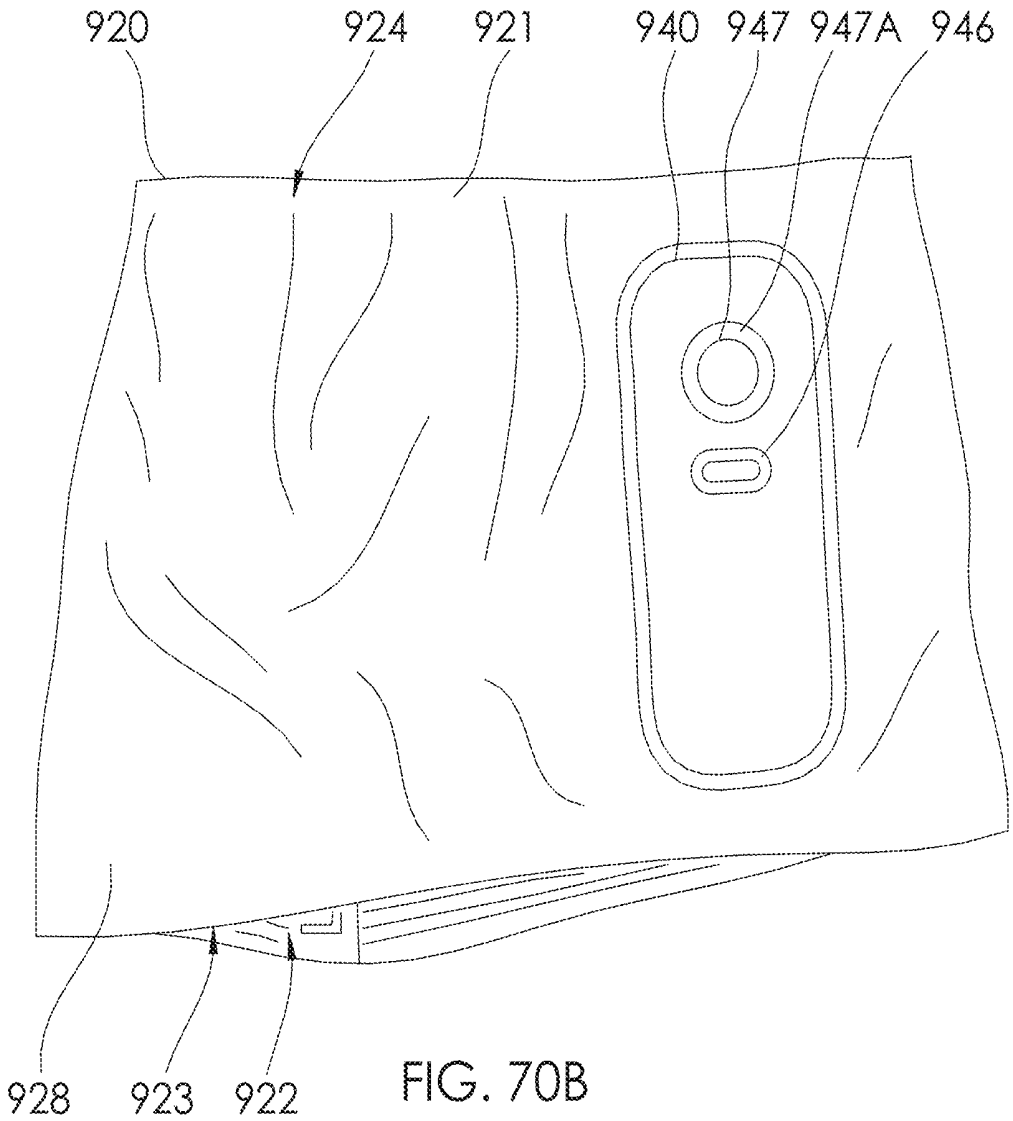


FIG. 70B

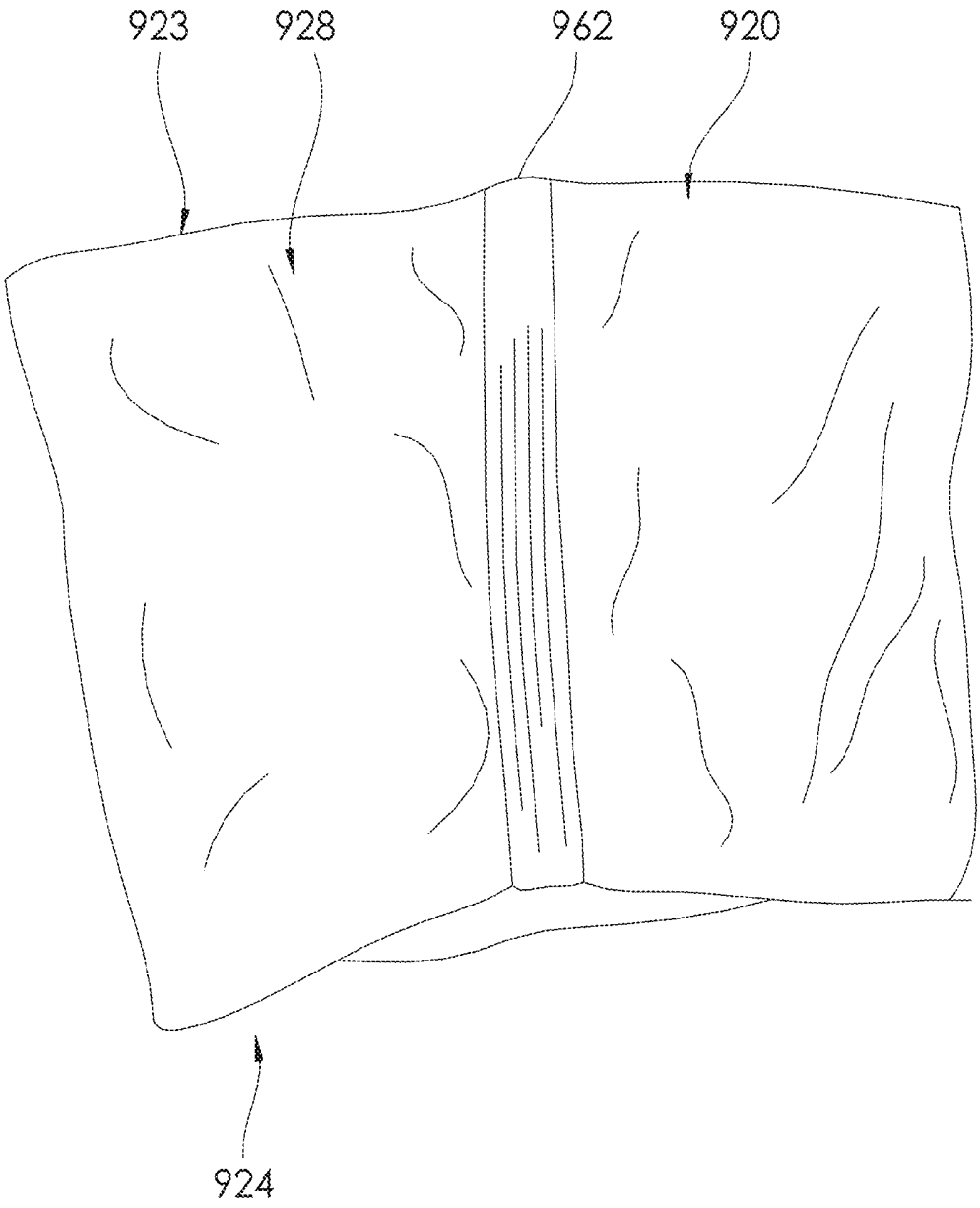


FIG. 70C

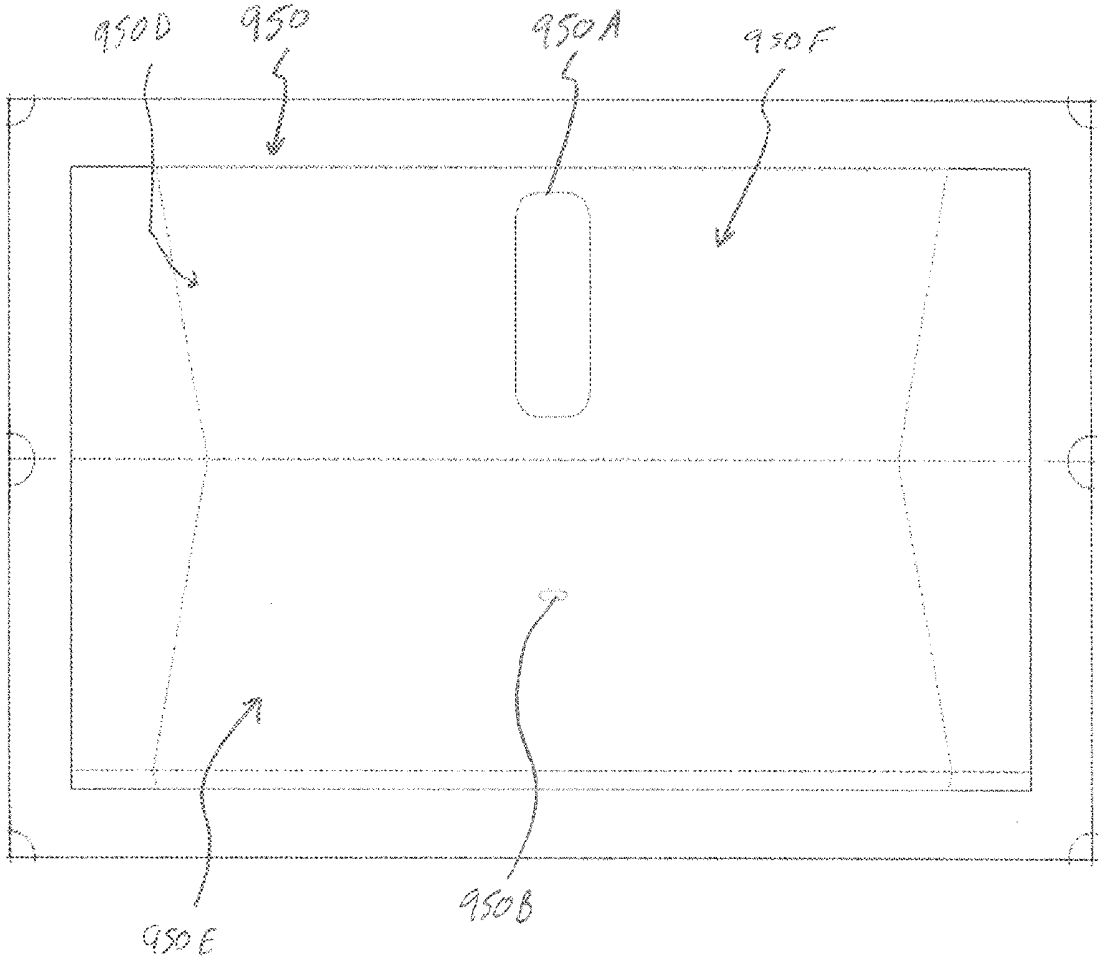


FIG. 71

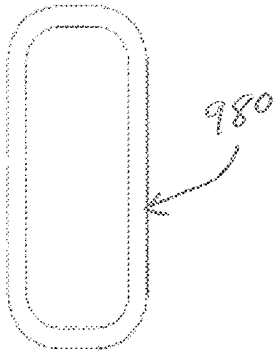


FIG. 72

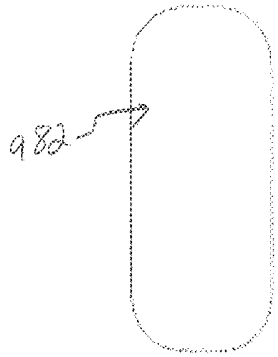


FIG. 73

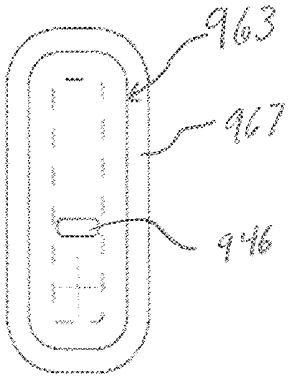


FIG. 74

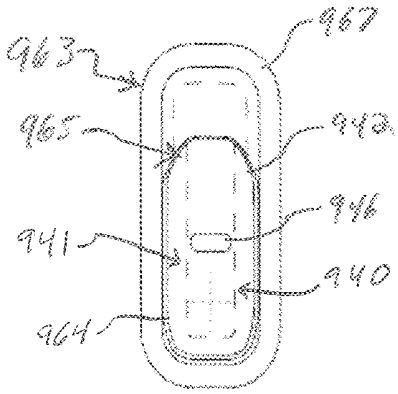


FIG. 75

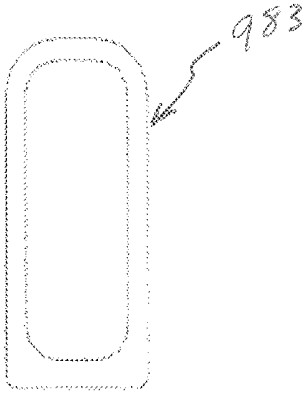


FIG. 76

FIG. 77

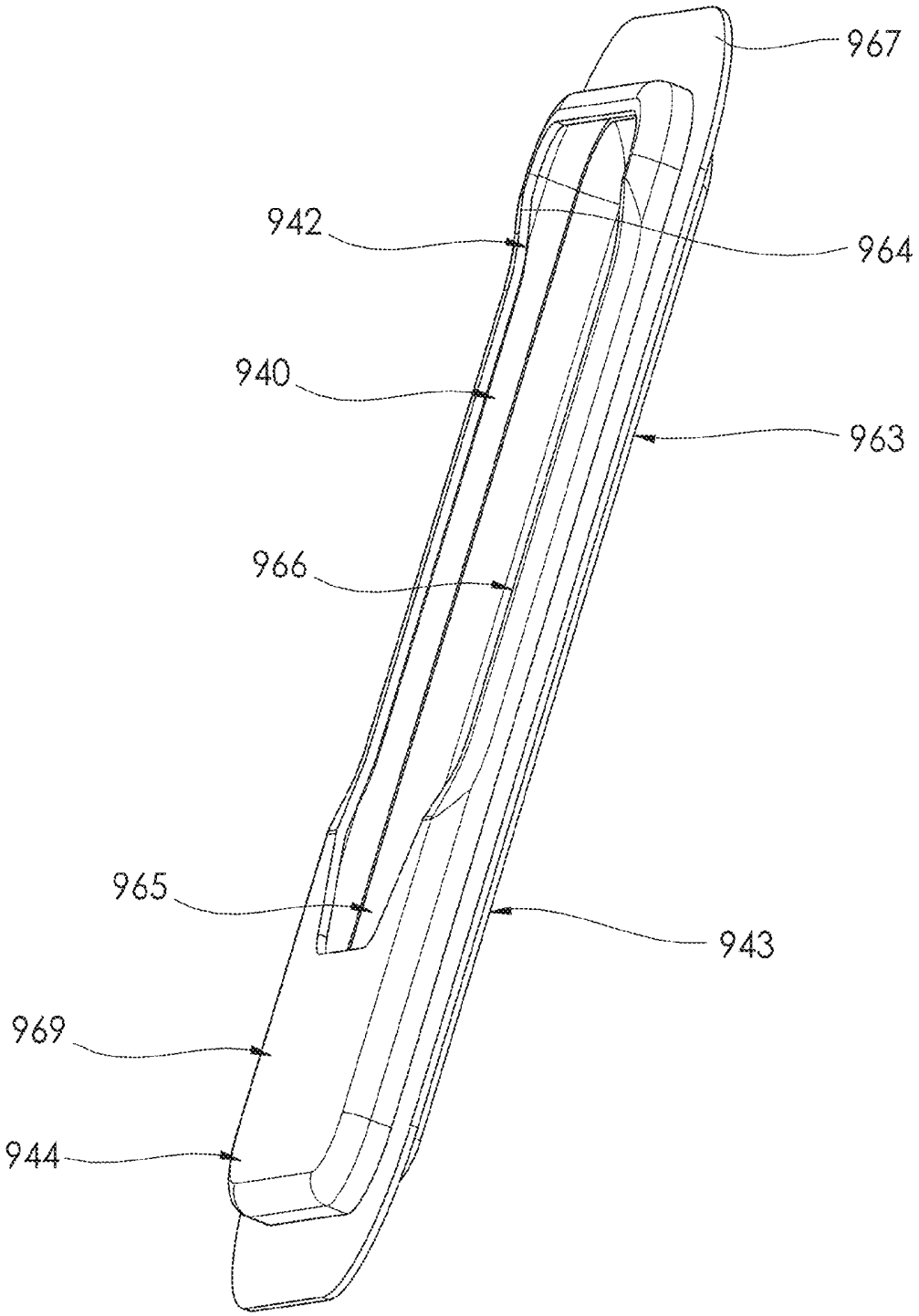


FIG. 78

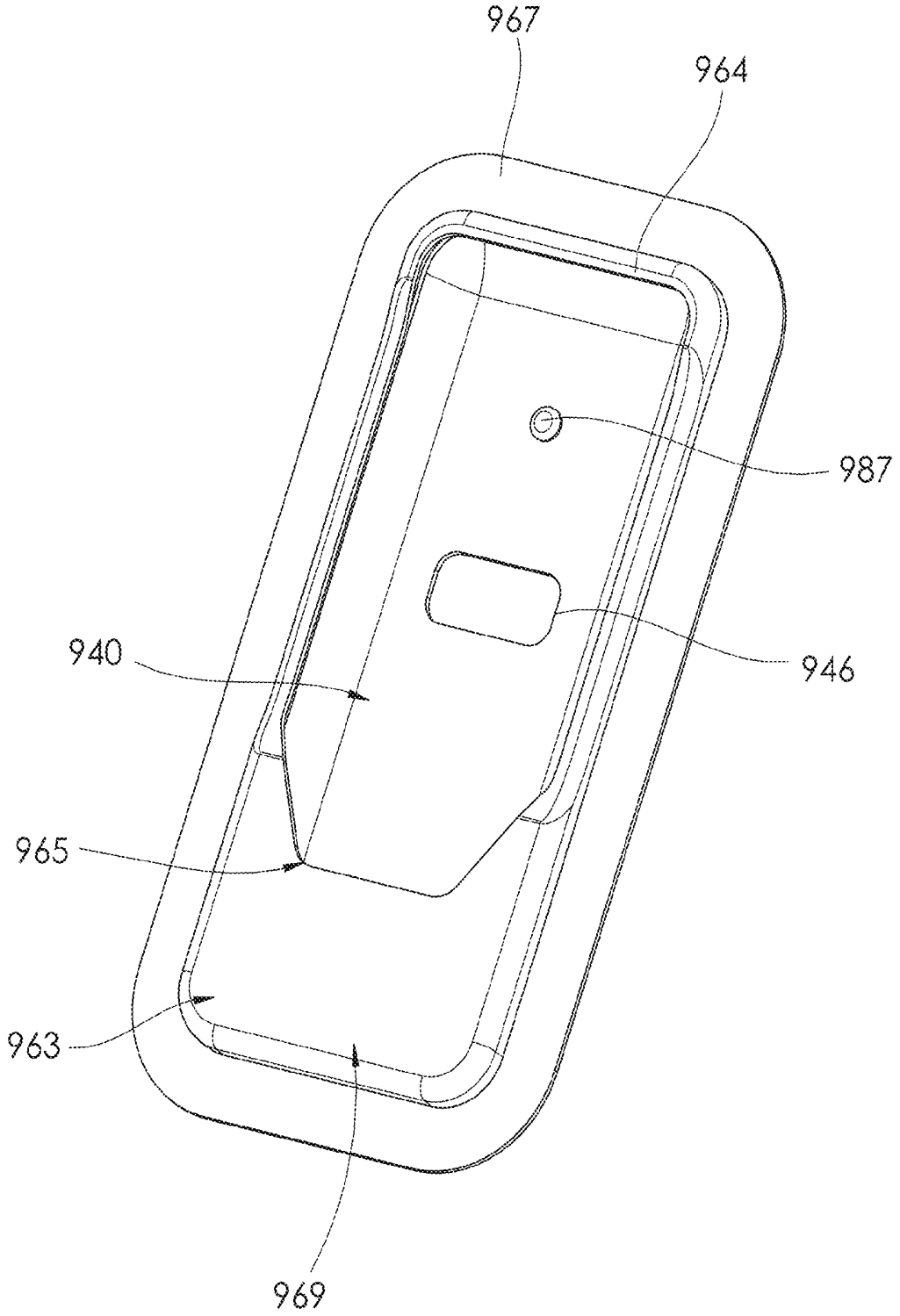


FIG. 79

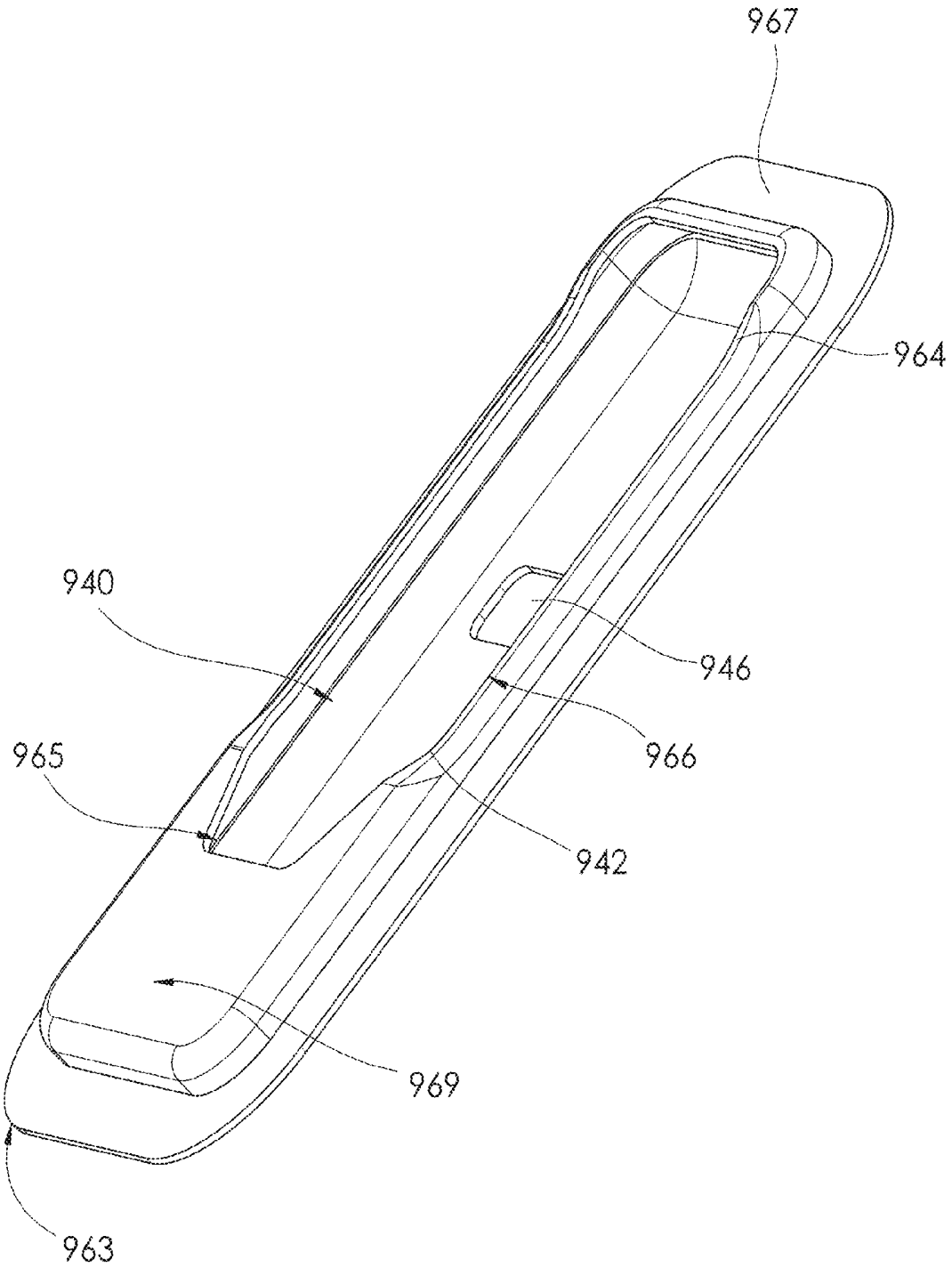


FIG. 80

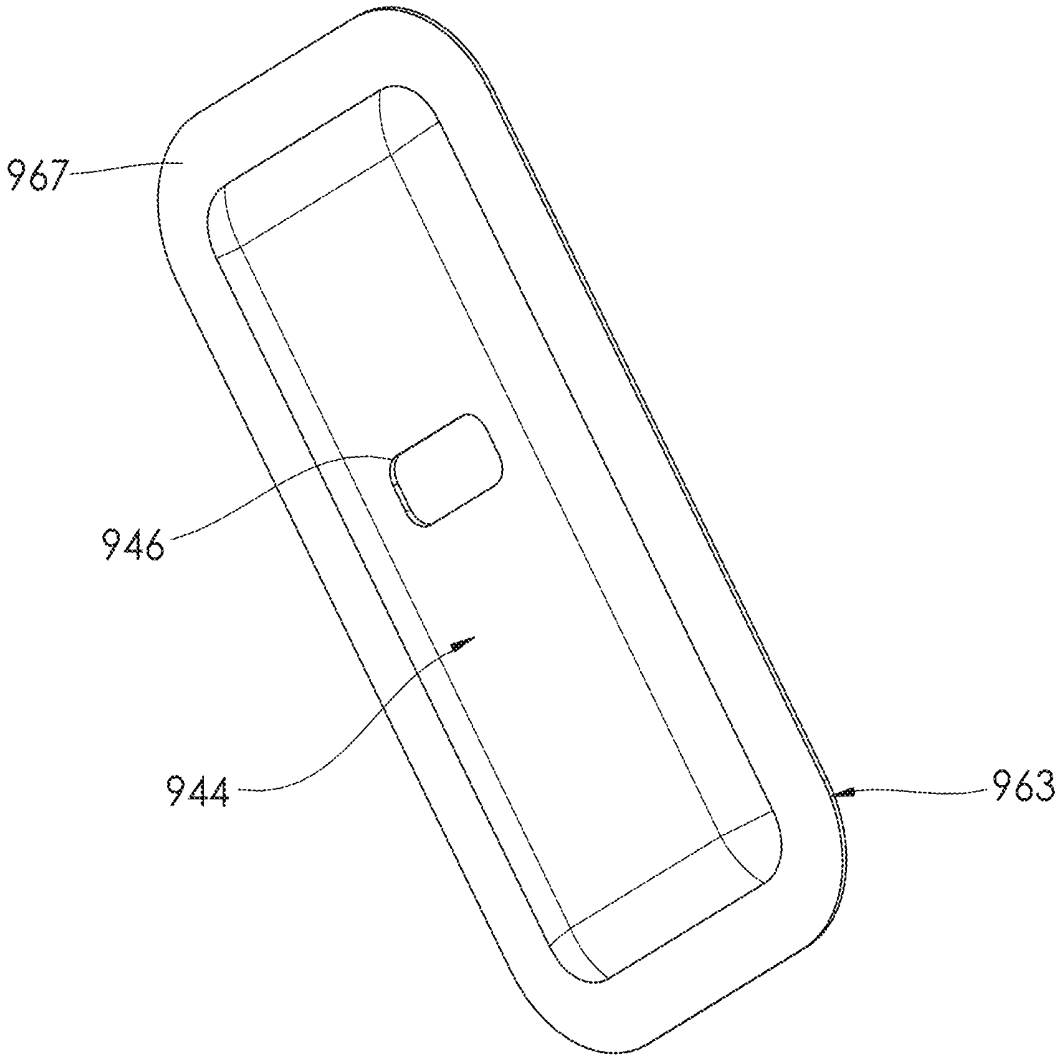


FIG. 81

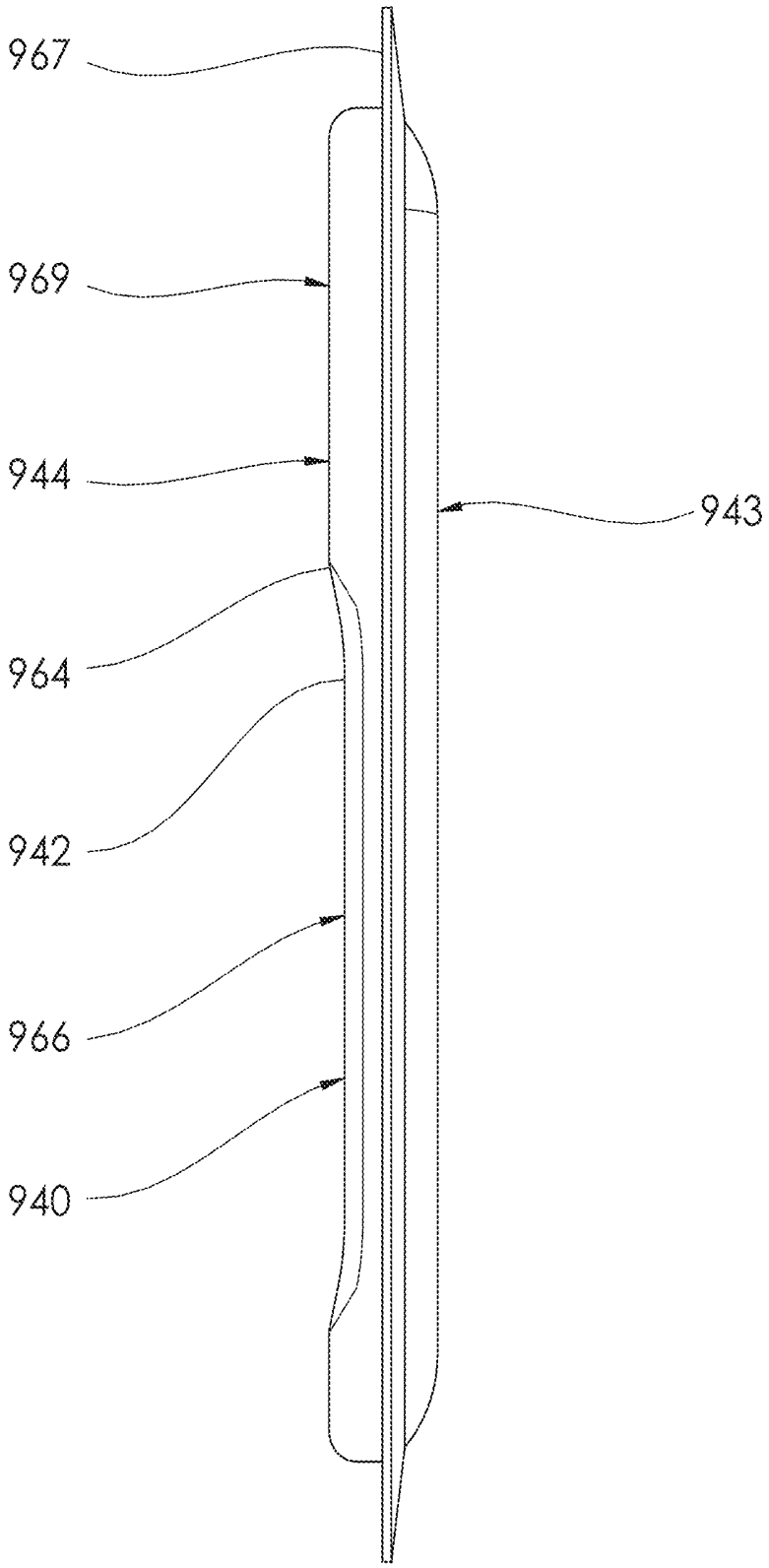


FIG. 82

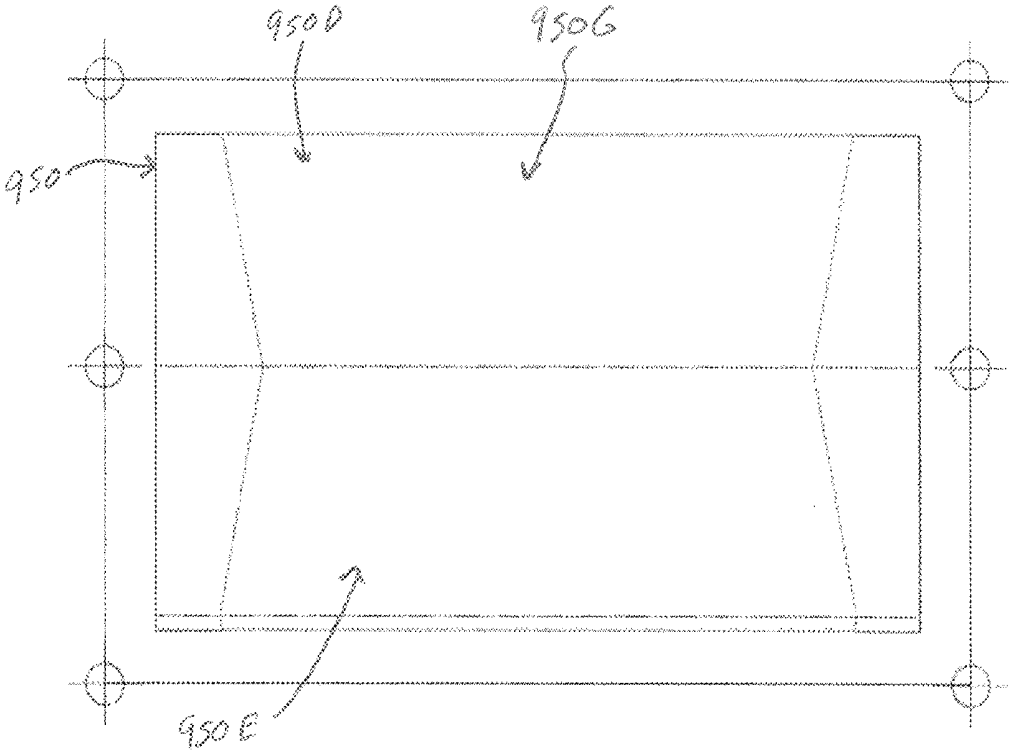
950D
950G
950
950E

FIG. 83

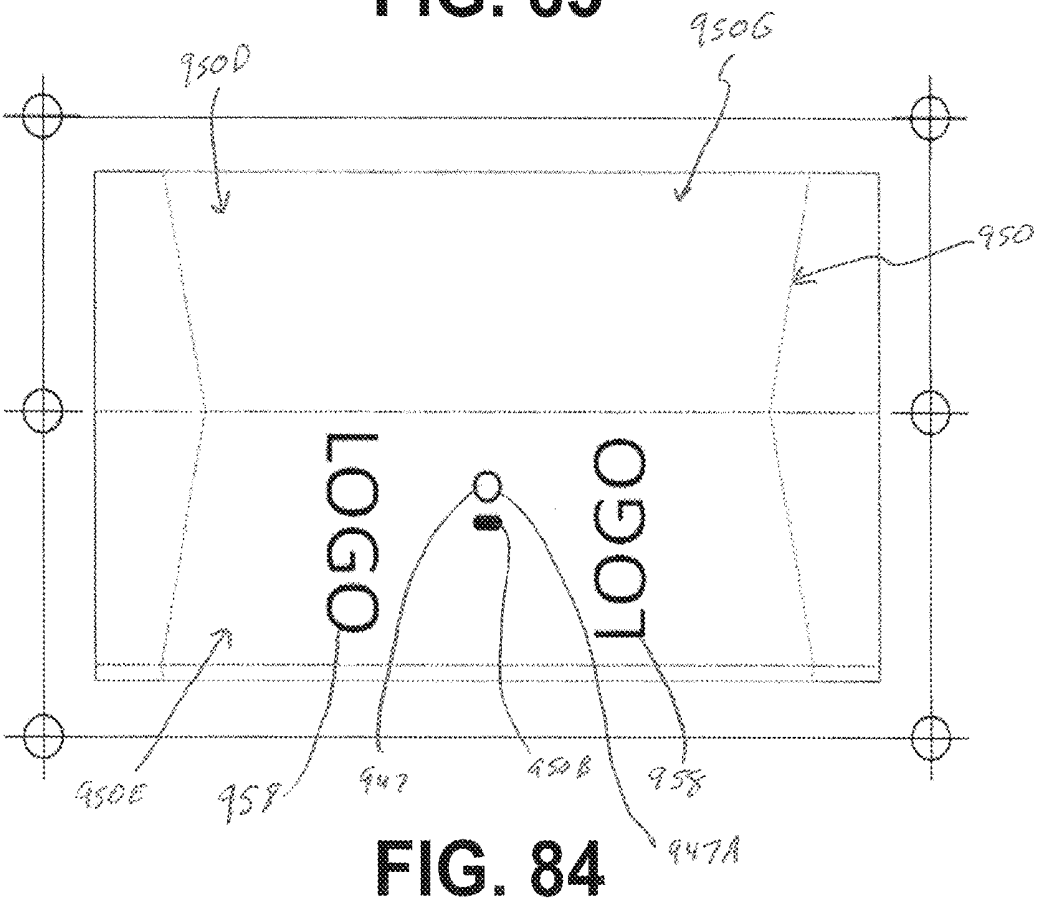
950D
950G
950
LOGO
LOGO
950E
958
947
950B
958
947A

FIG. 84

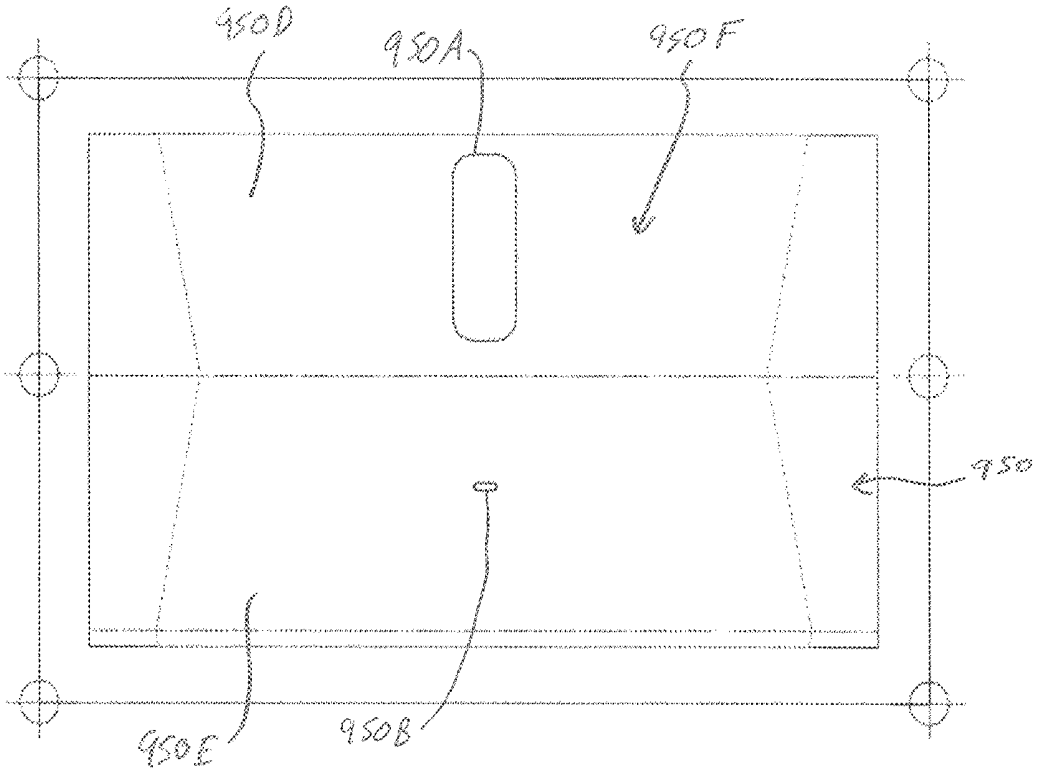
950D
950A
950F
950
950E
950B

FIG. 85

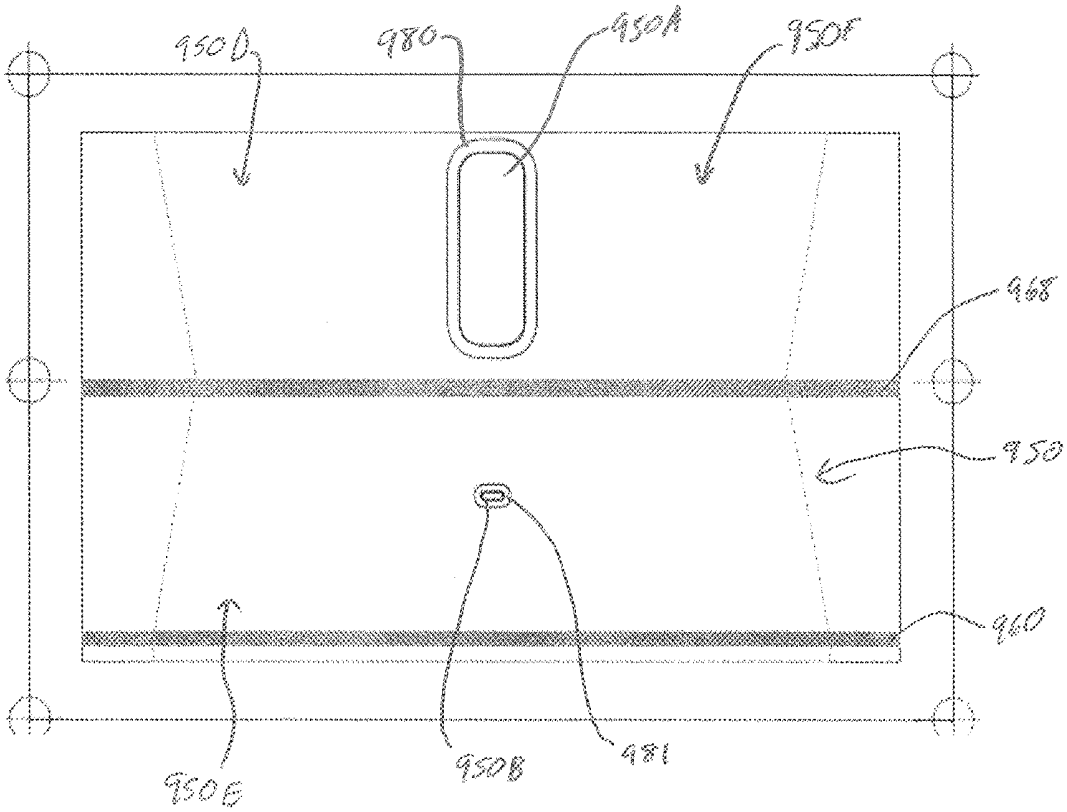
950D
980
950A
950F
968
950
960
950E
950B
981

FIG. 86

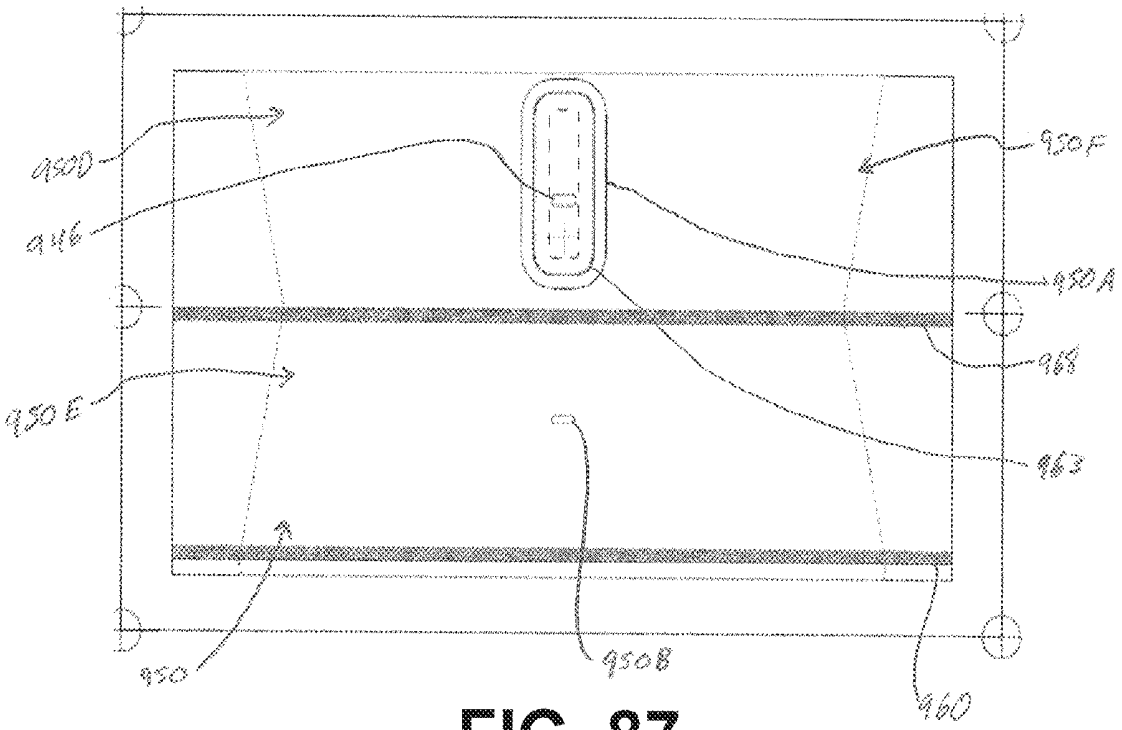
950D
946
950F
950A
968
950E
963
950
950B
960

FIG. 87

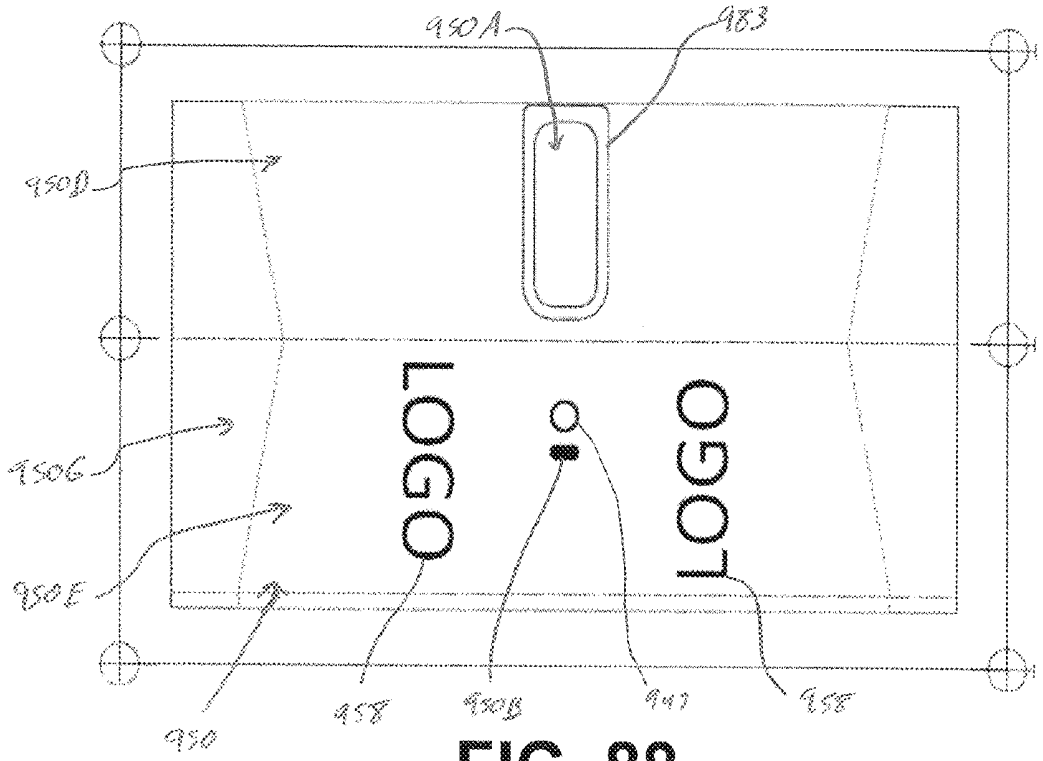
950A
983
950D
LOGO
LOGO
950G
950E
958
950B
947
958
950

FIG. 88

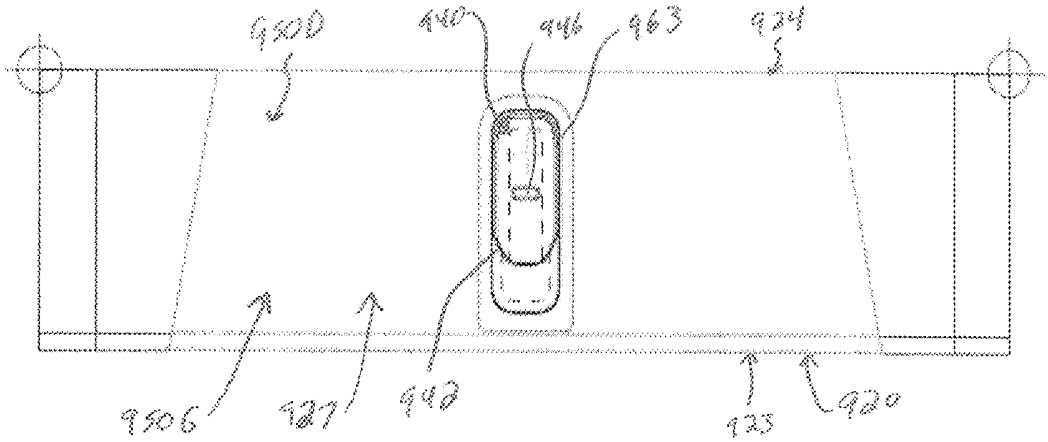
950D
940
946
963
924
950G
927
942
923
920

FIG. 89

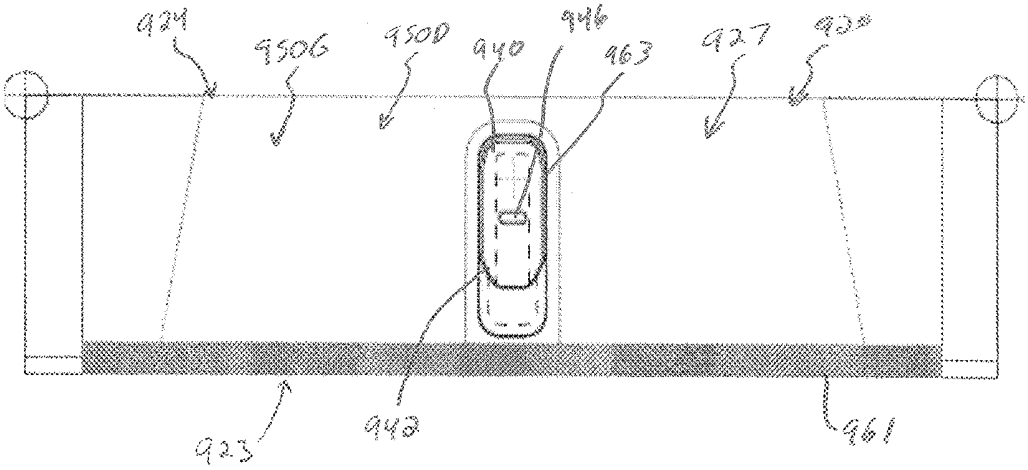
924
950G
950D
940
946
963
927
920
923
942
961

FIG. 90

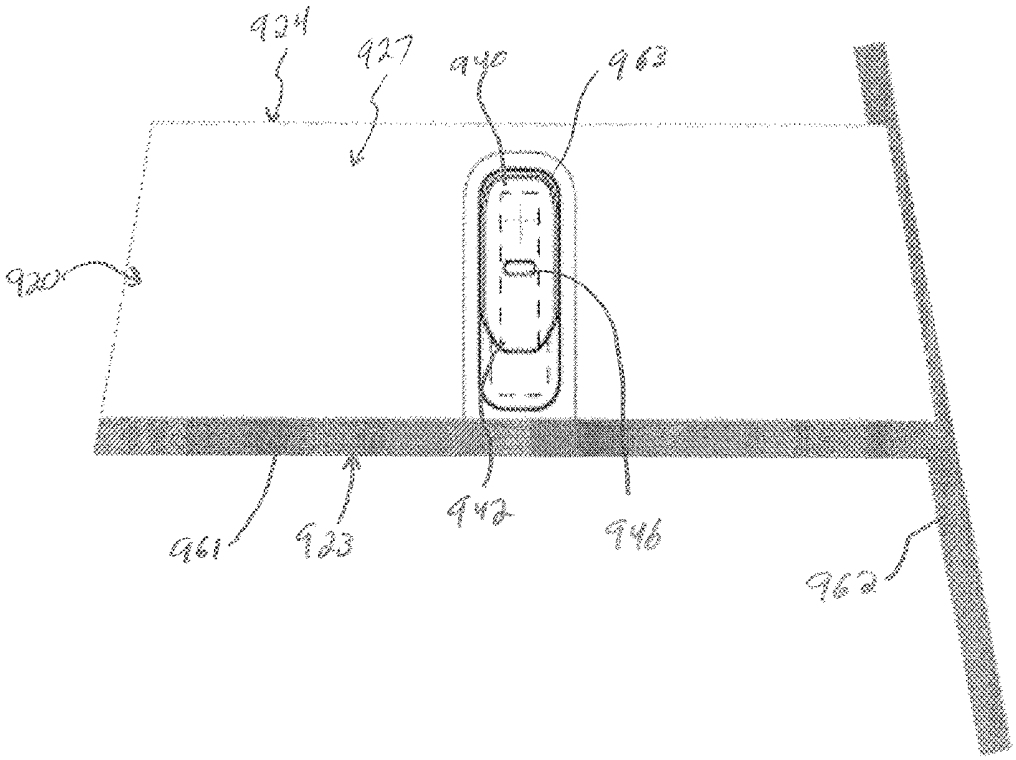


FIG. 91

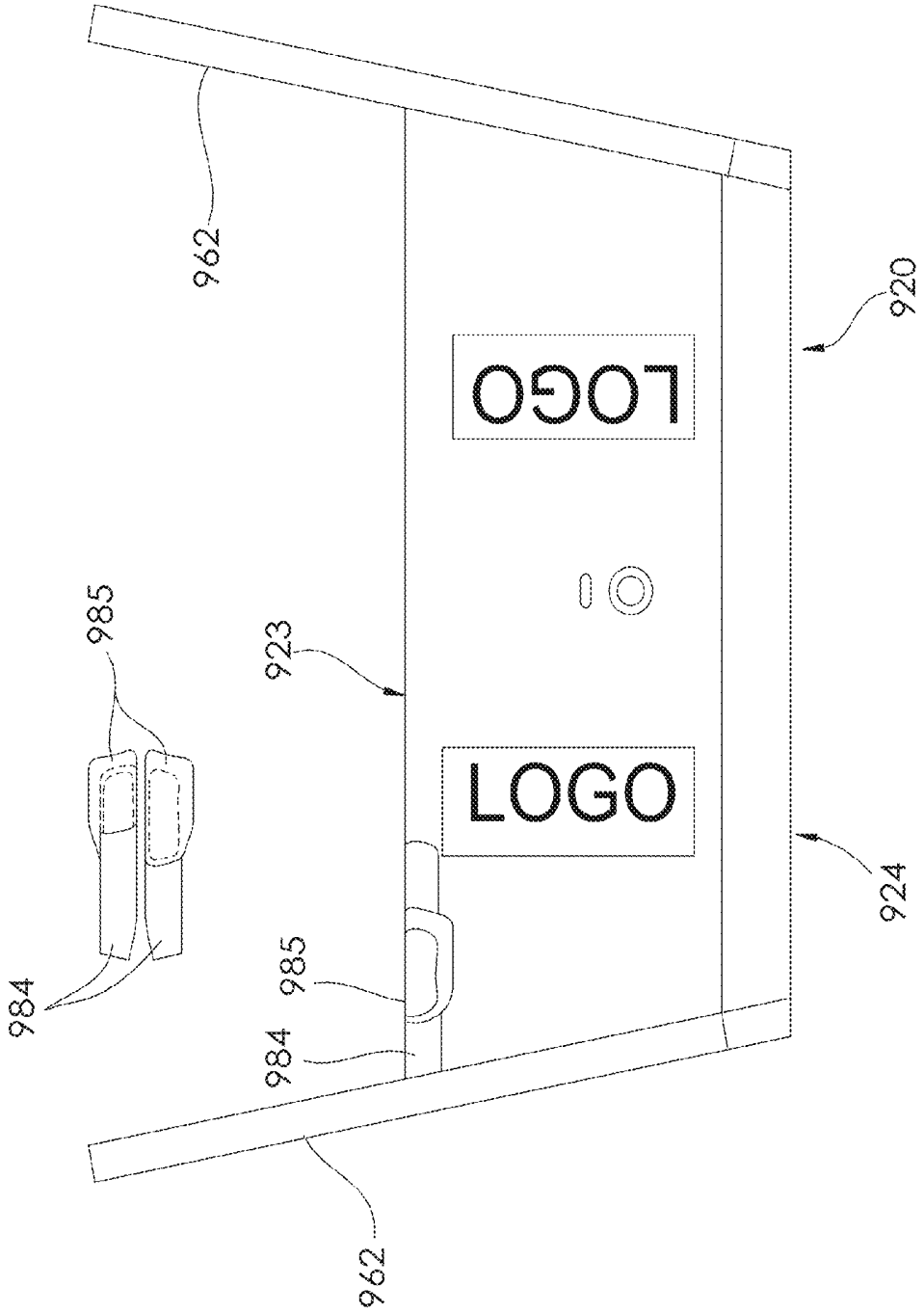


FIG. 92

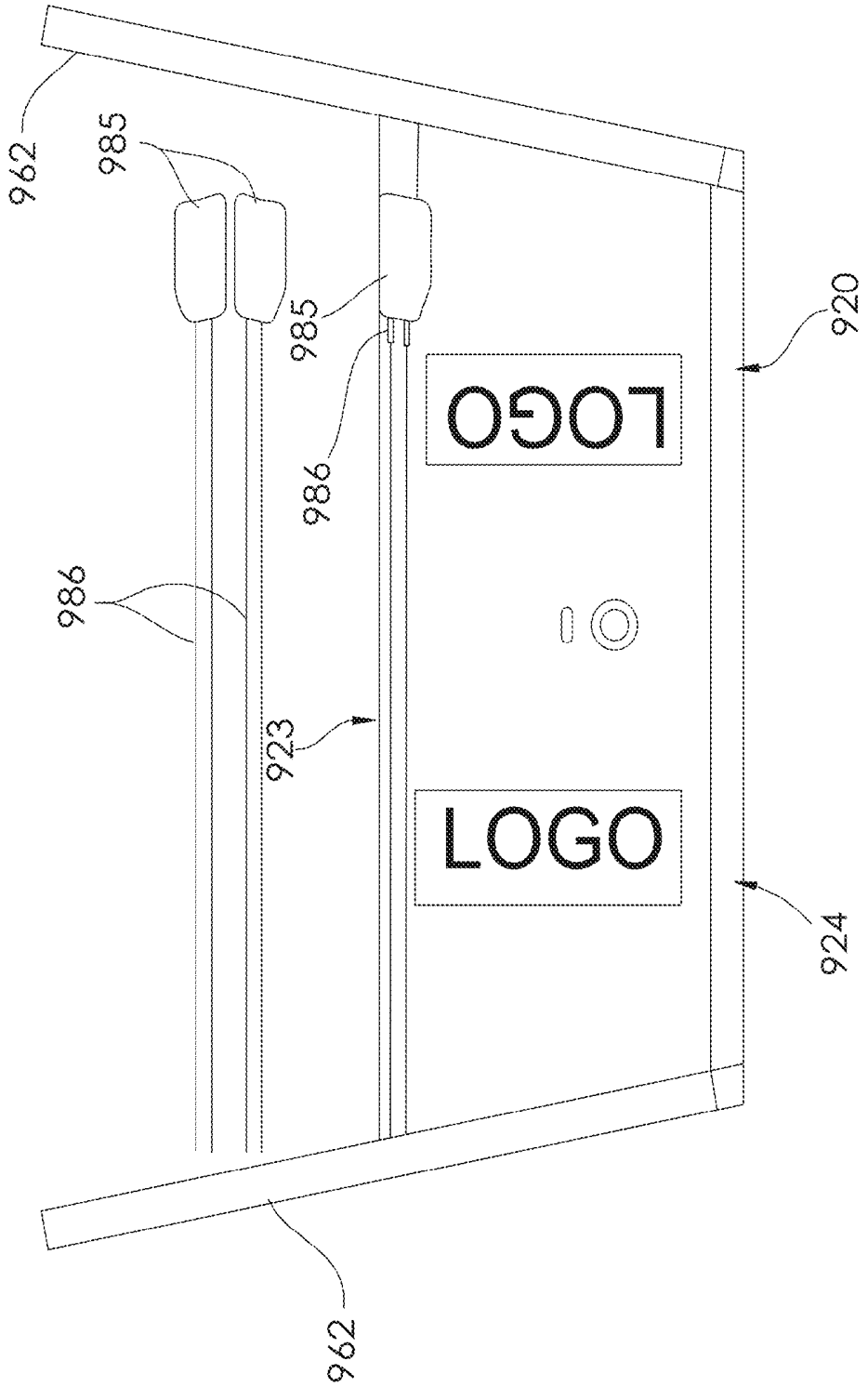


FIG. 93

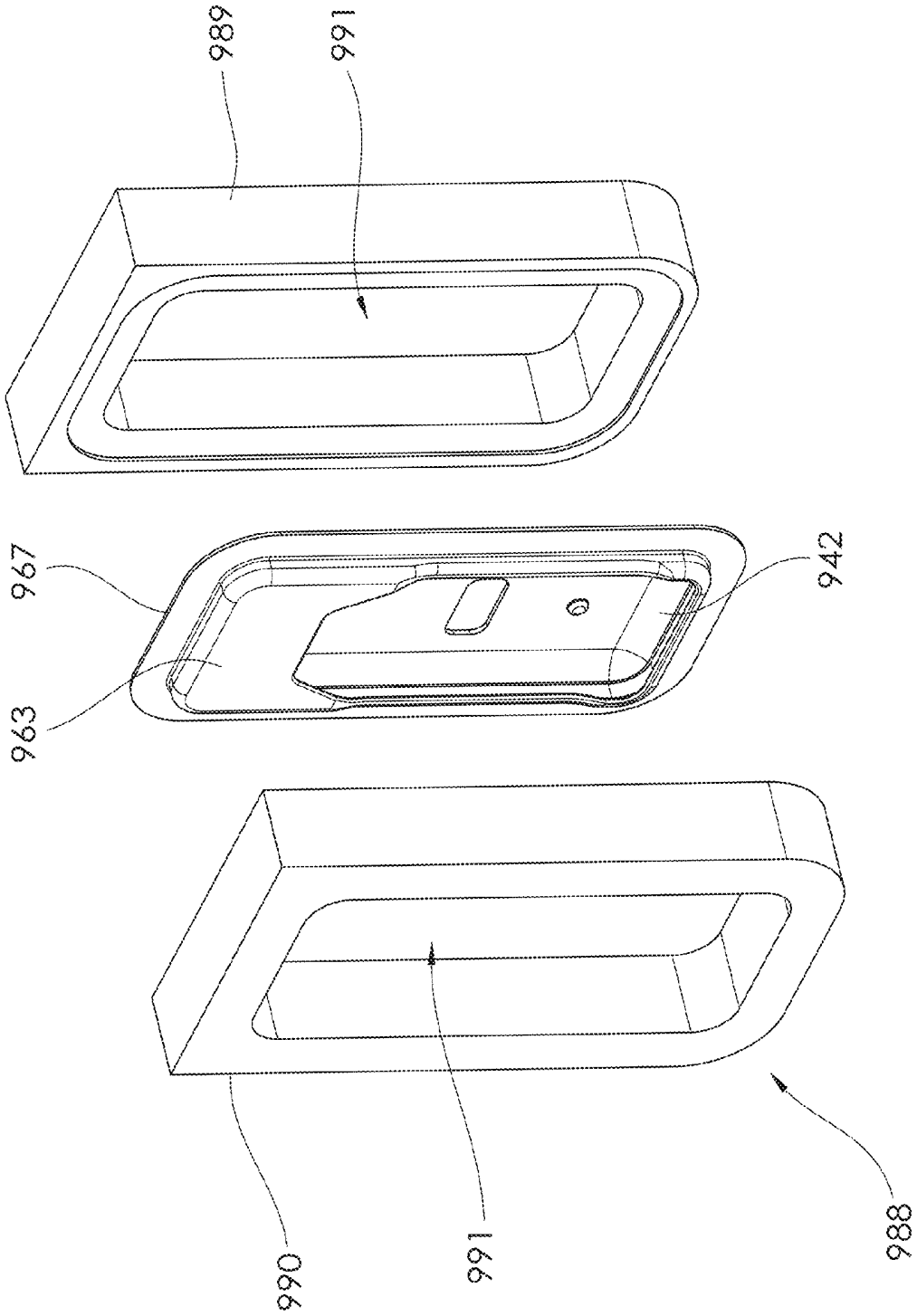


FIG. 94

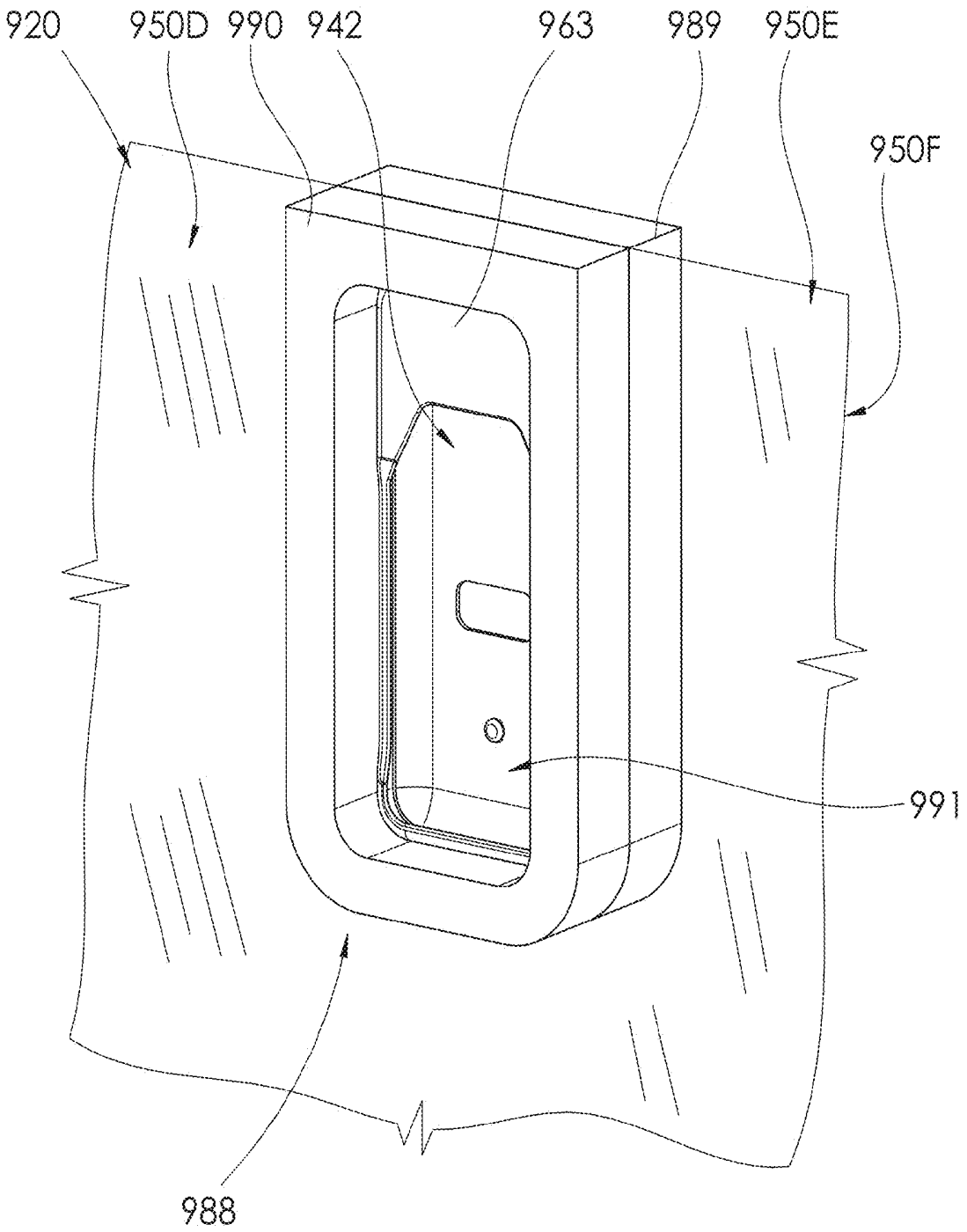


FIG. 95

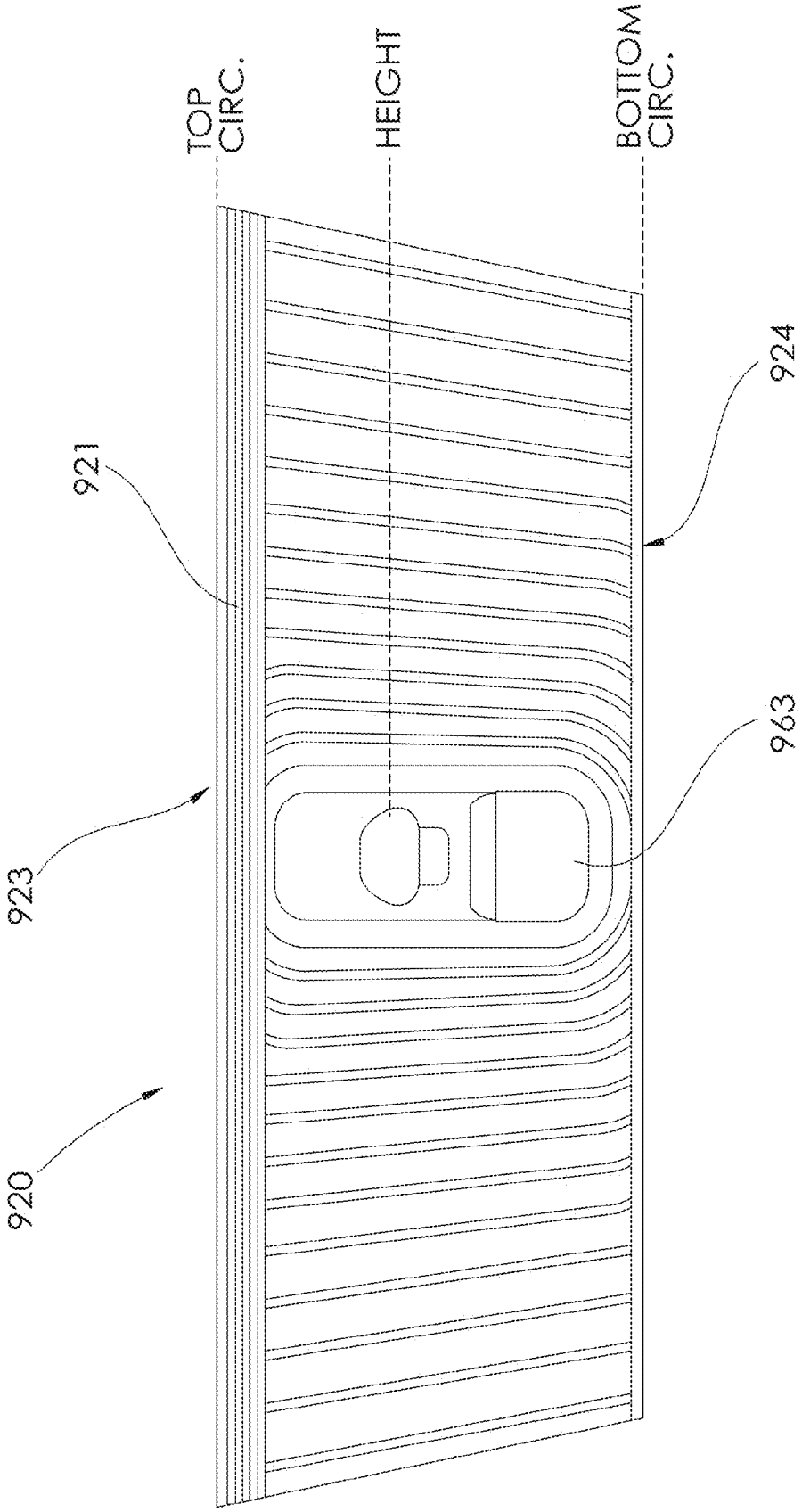


FIG. 96

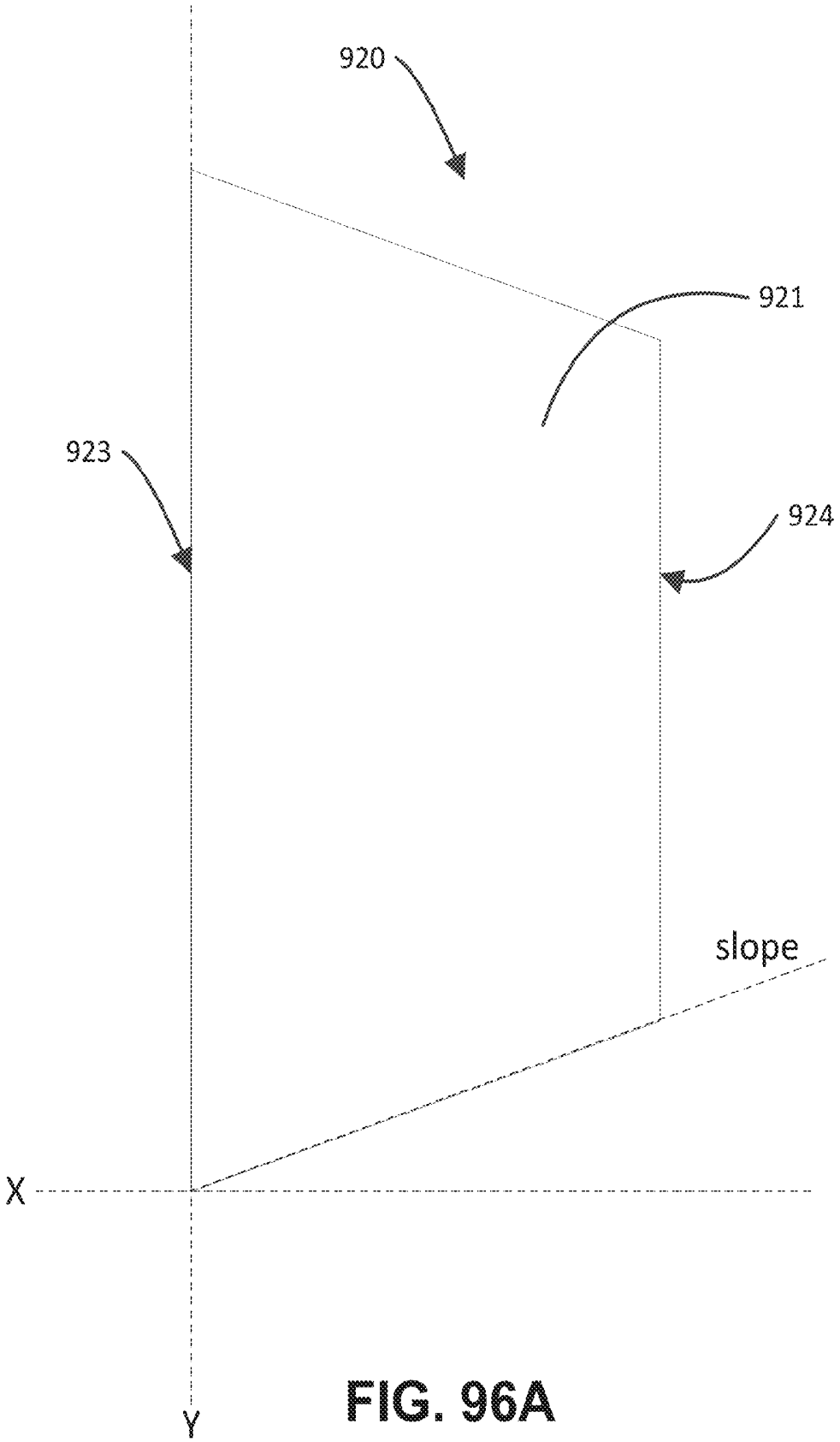


FIG. 96A

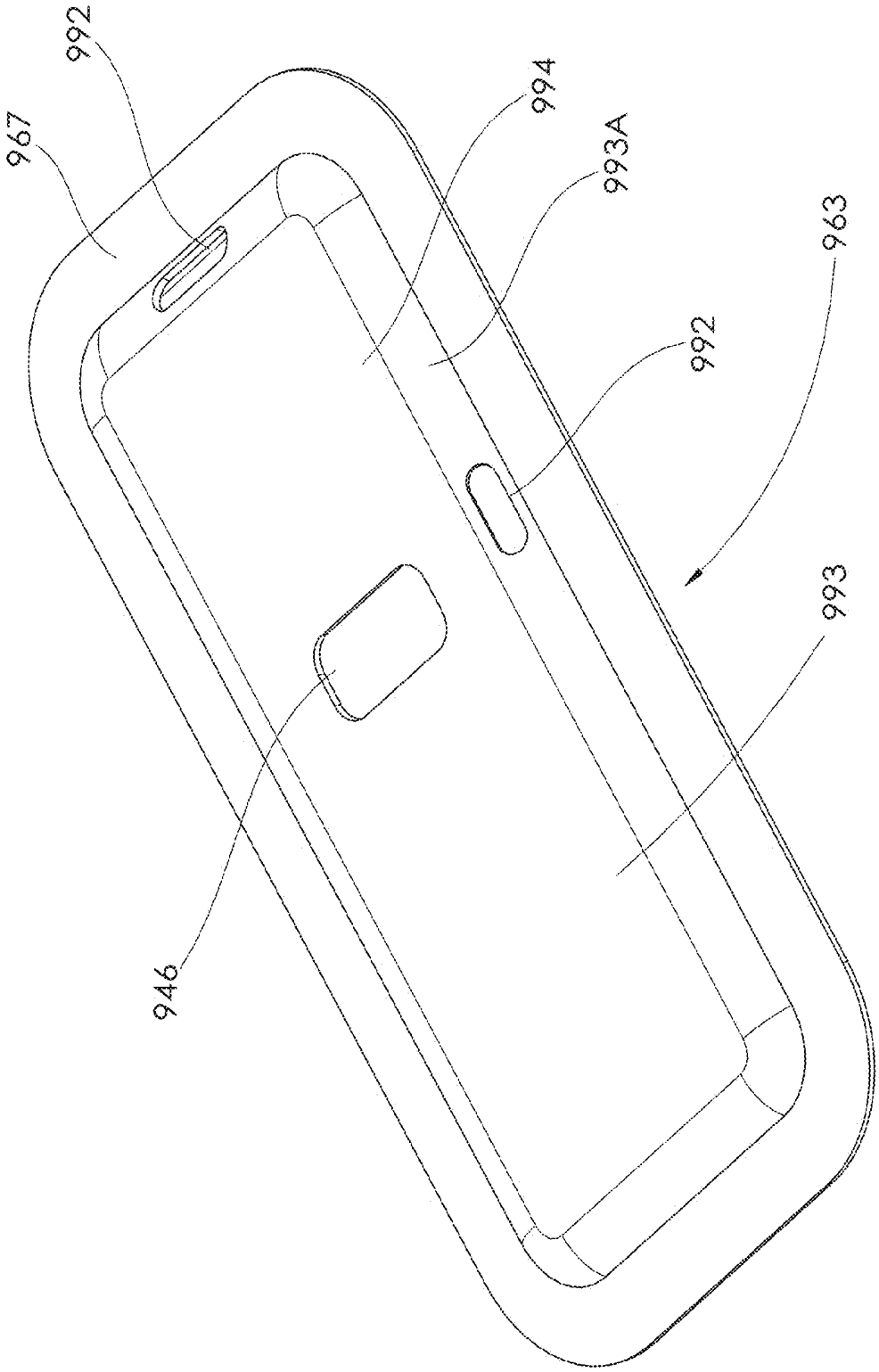


FIG. 97

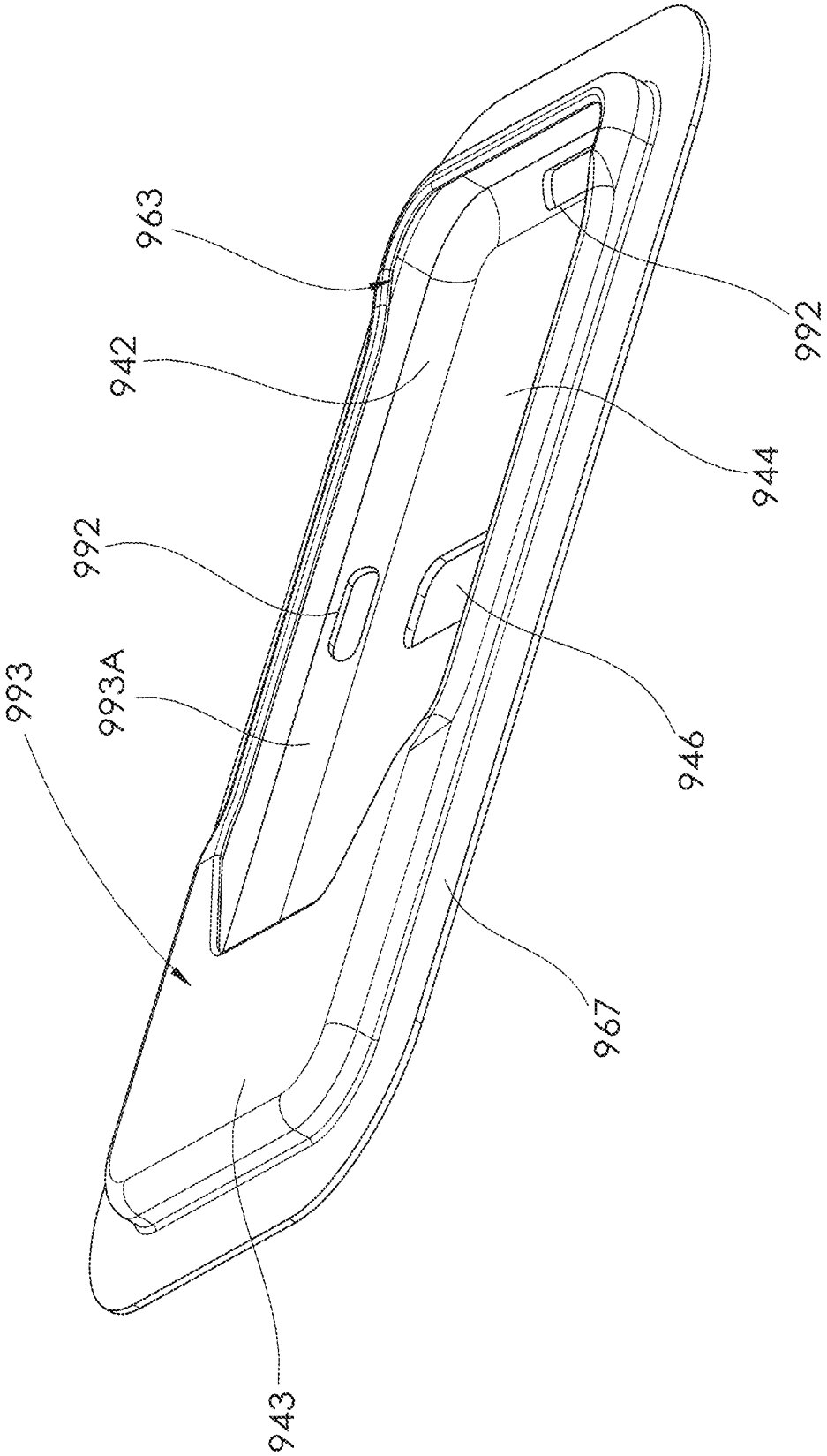


FIG. 98

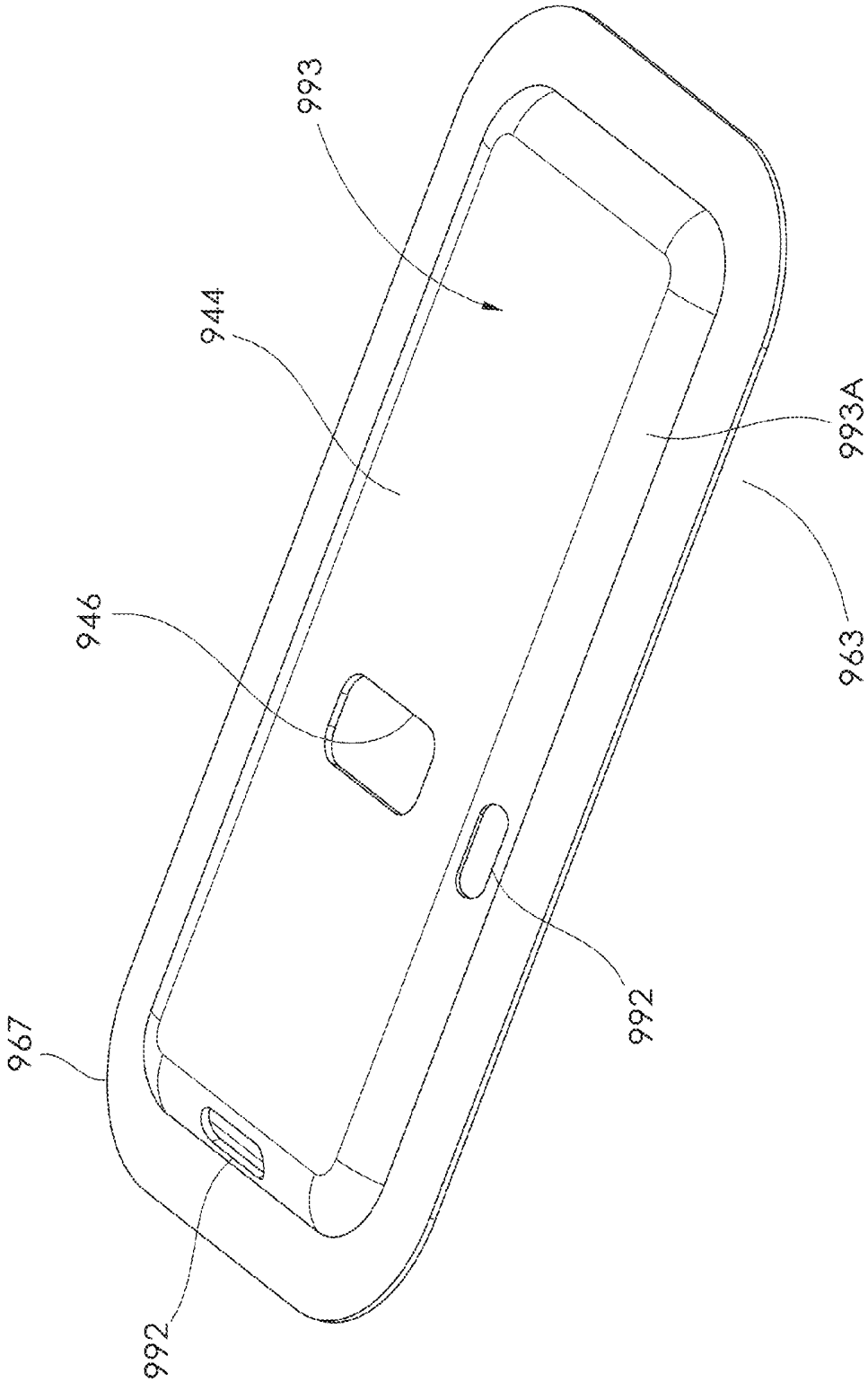


FIG. 99

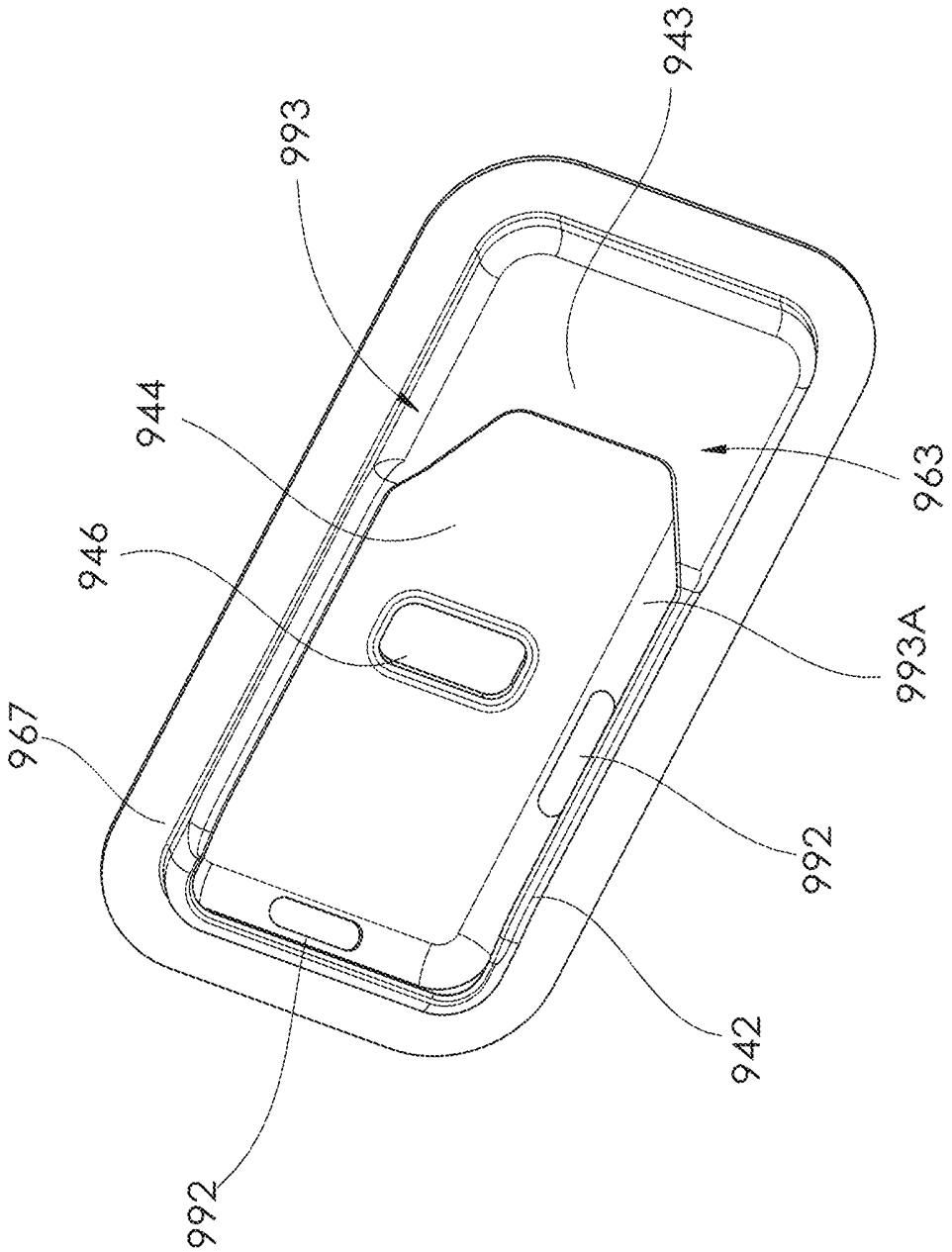


FIG. 100

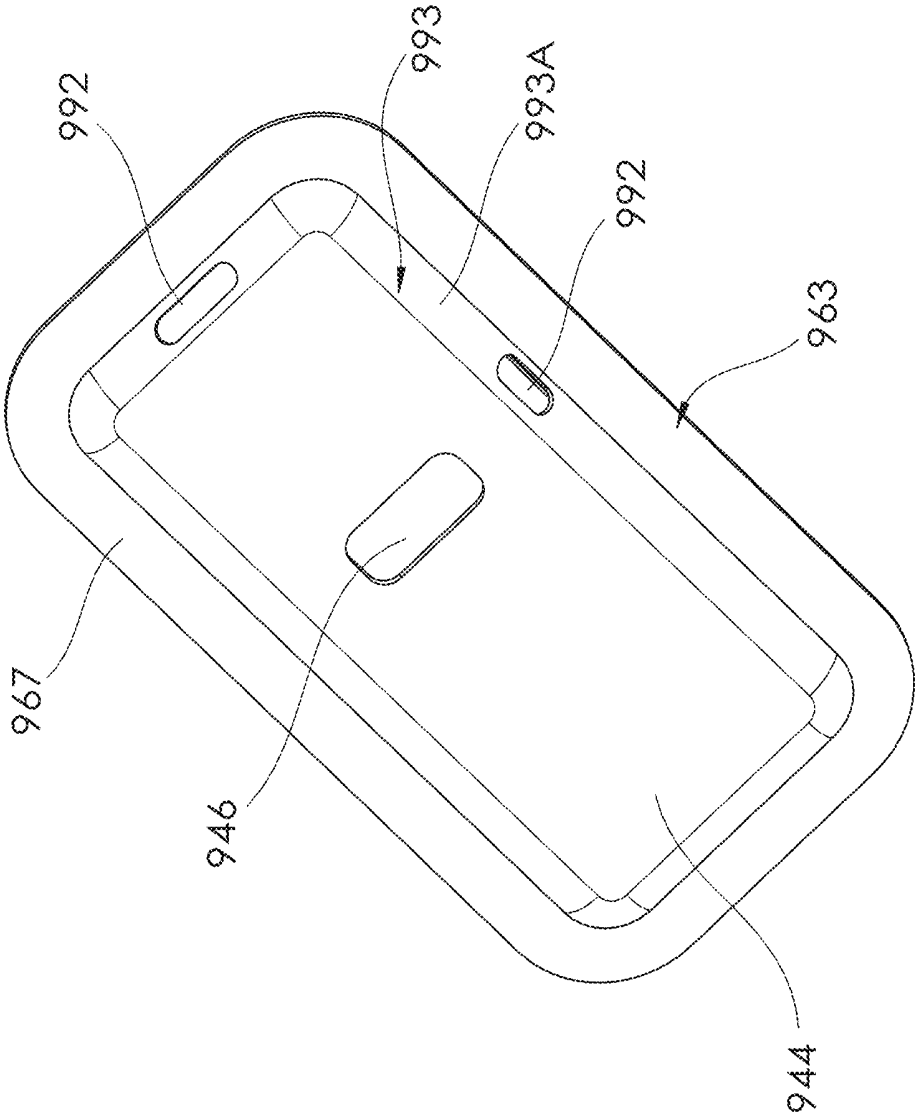


FIG. 101

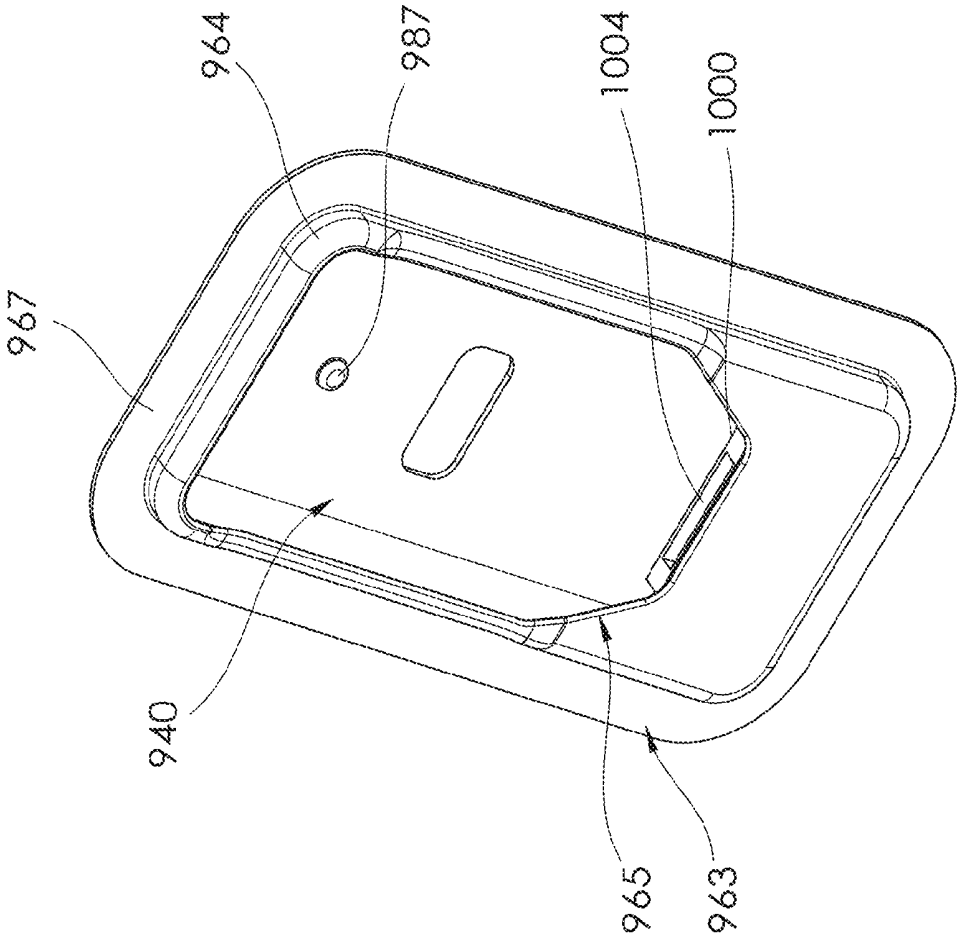


FIG. 102

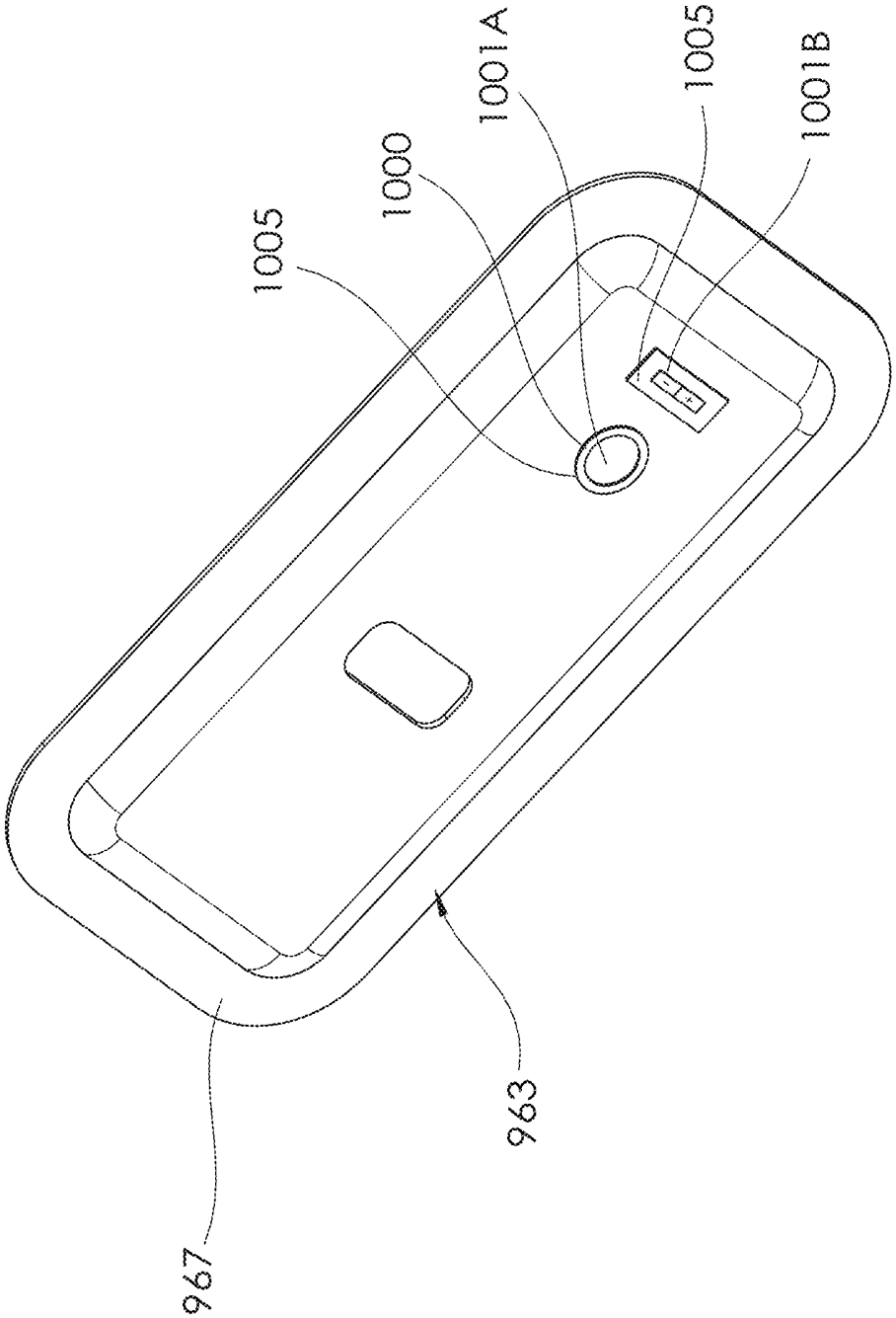


FIG. 103

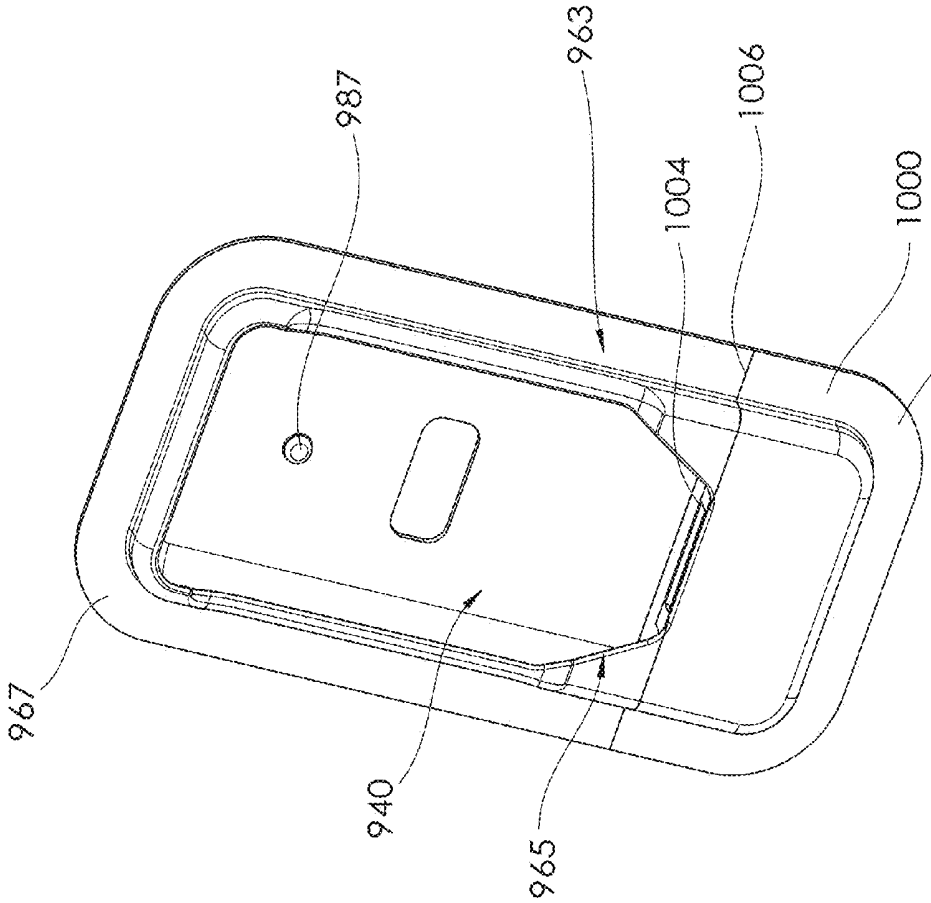


FIG. 104

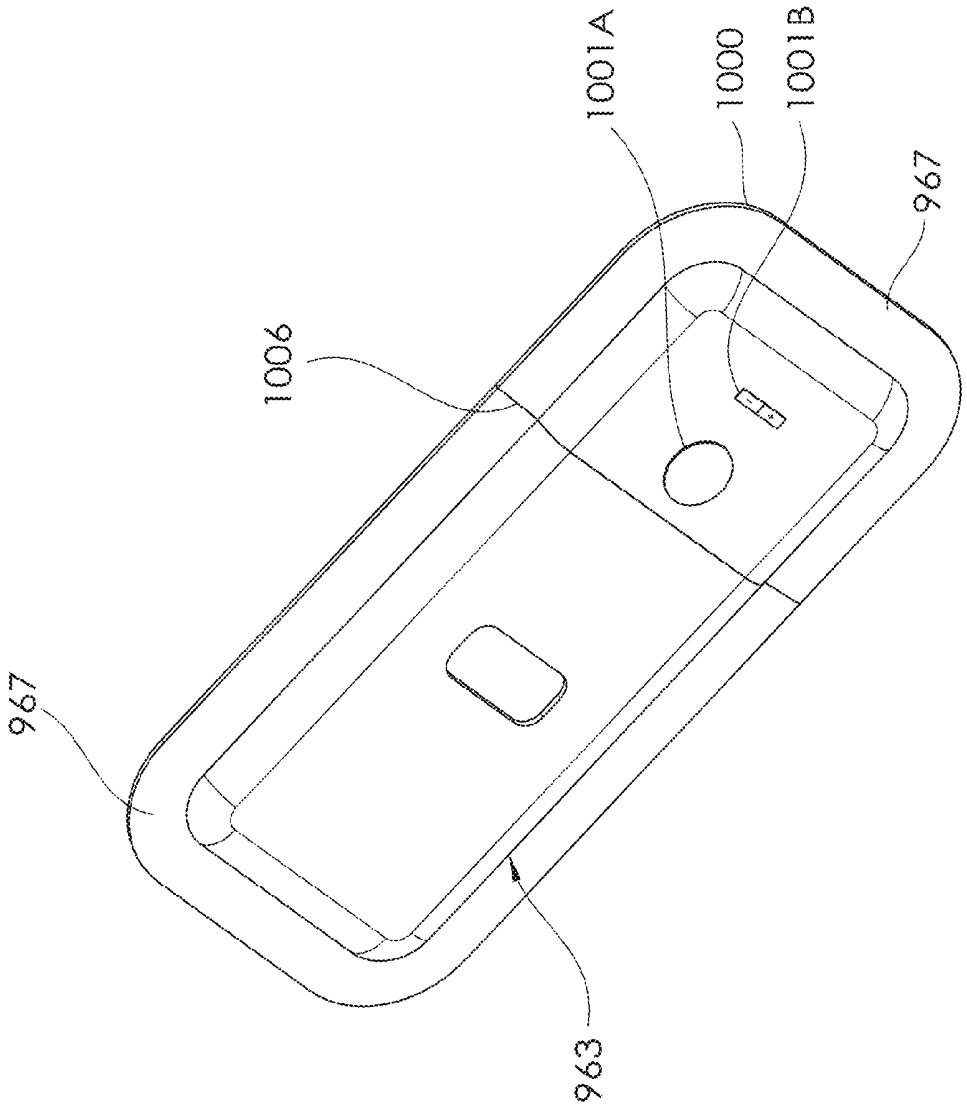


FIG. 105

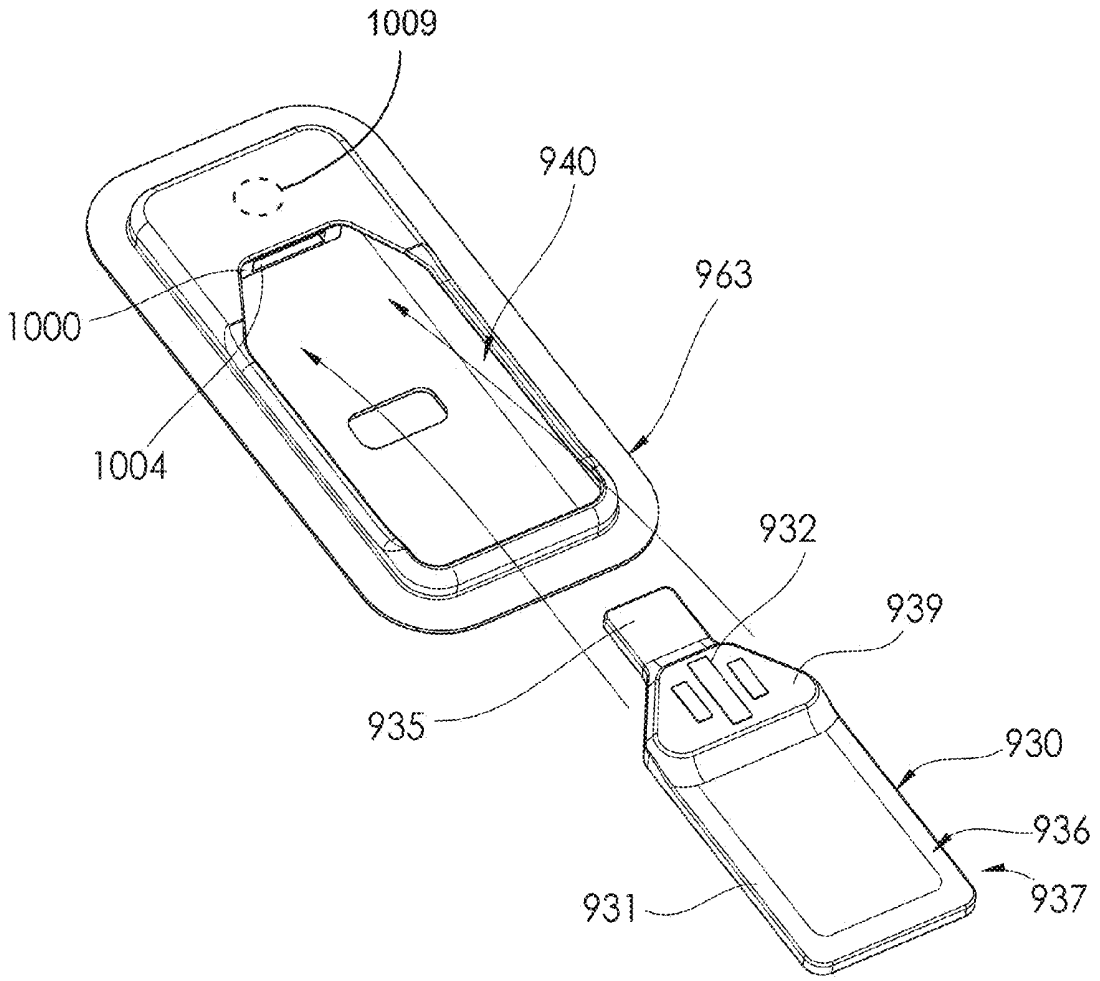


FIG. 106

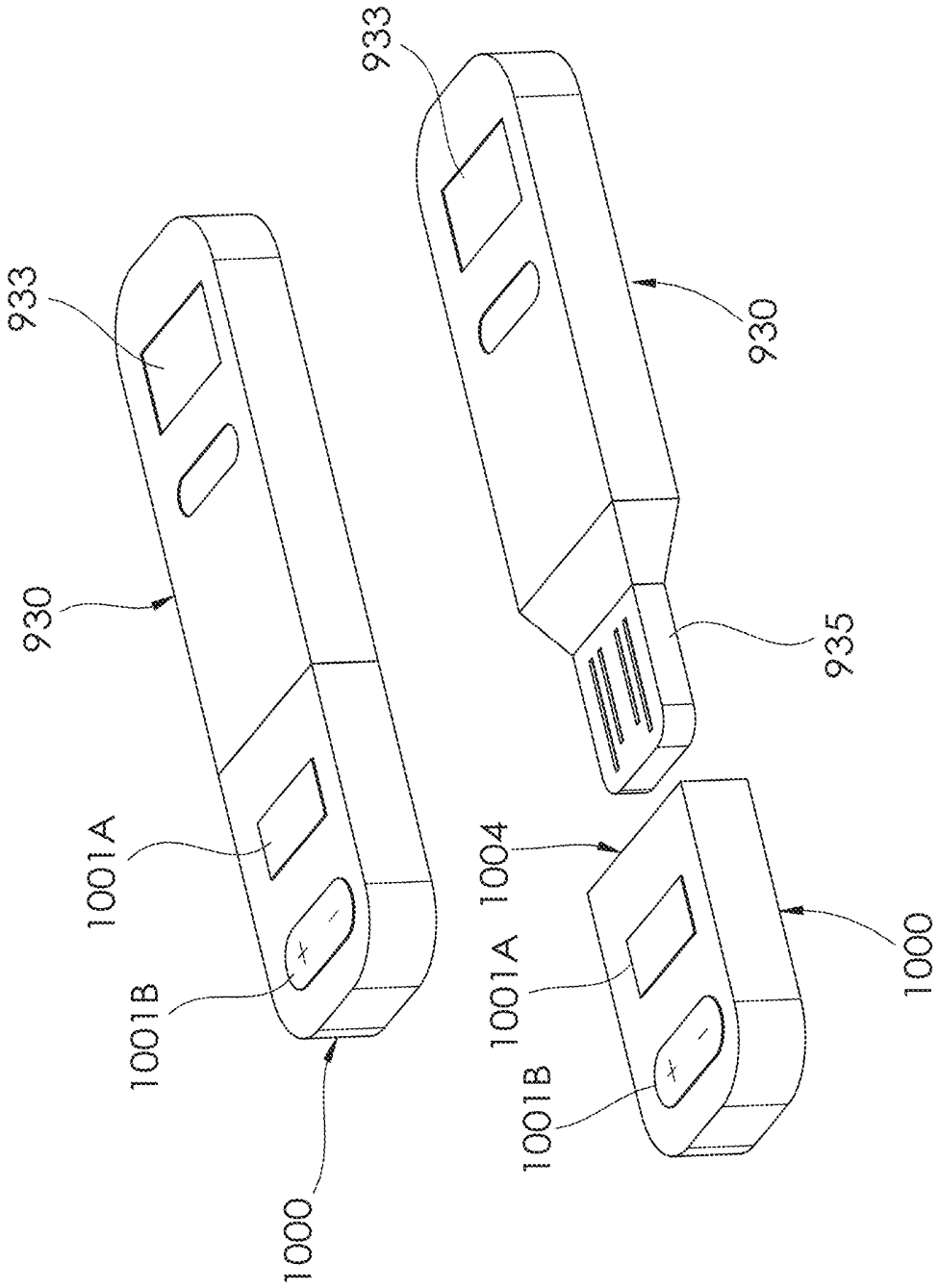


FIG. 107

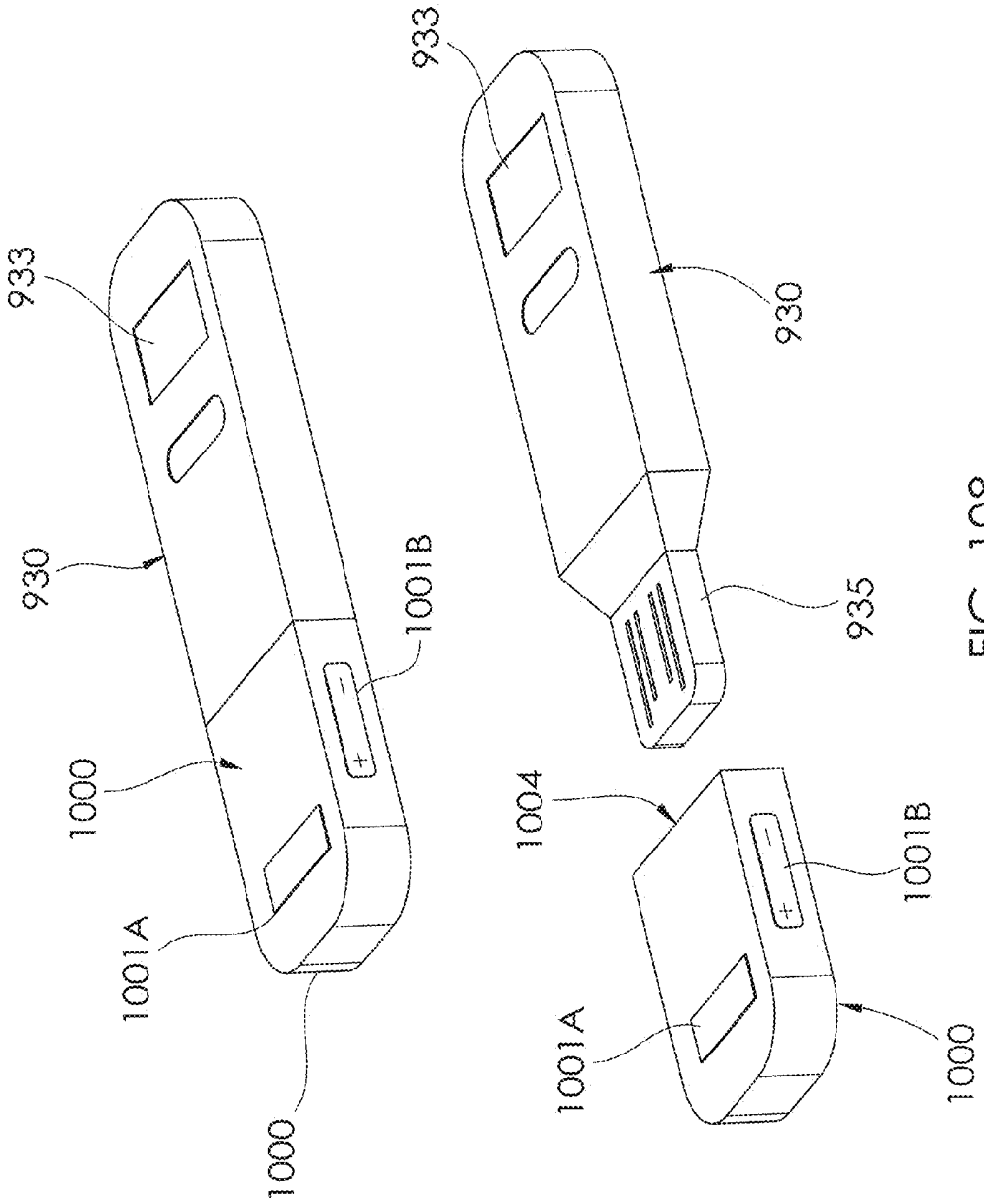
933
930
1000
1001A
1000
1001B
933
930
935
1004
1001A
1001B
1000

FIG. 108

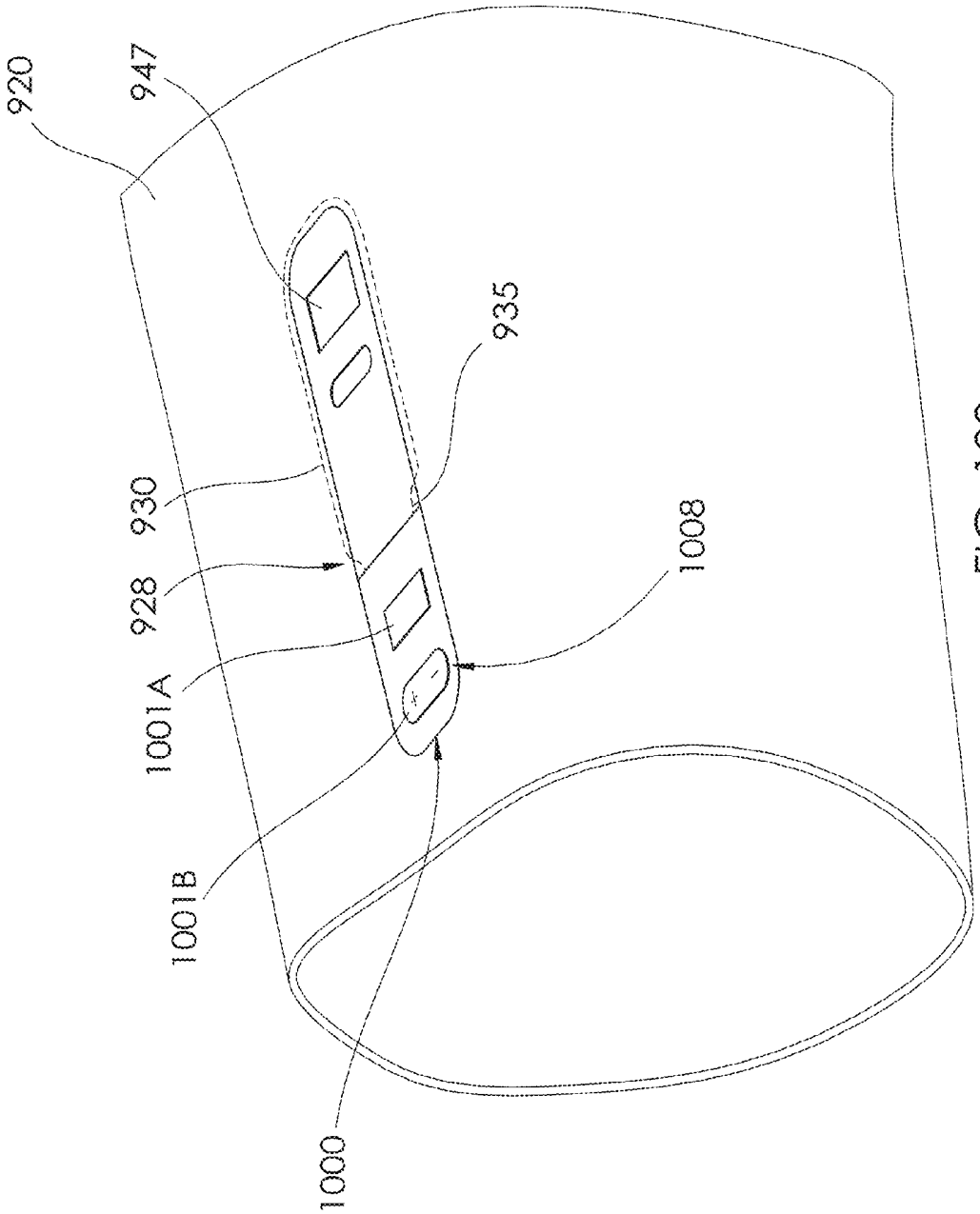


FIG. 109

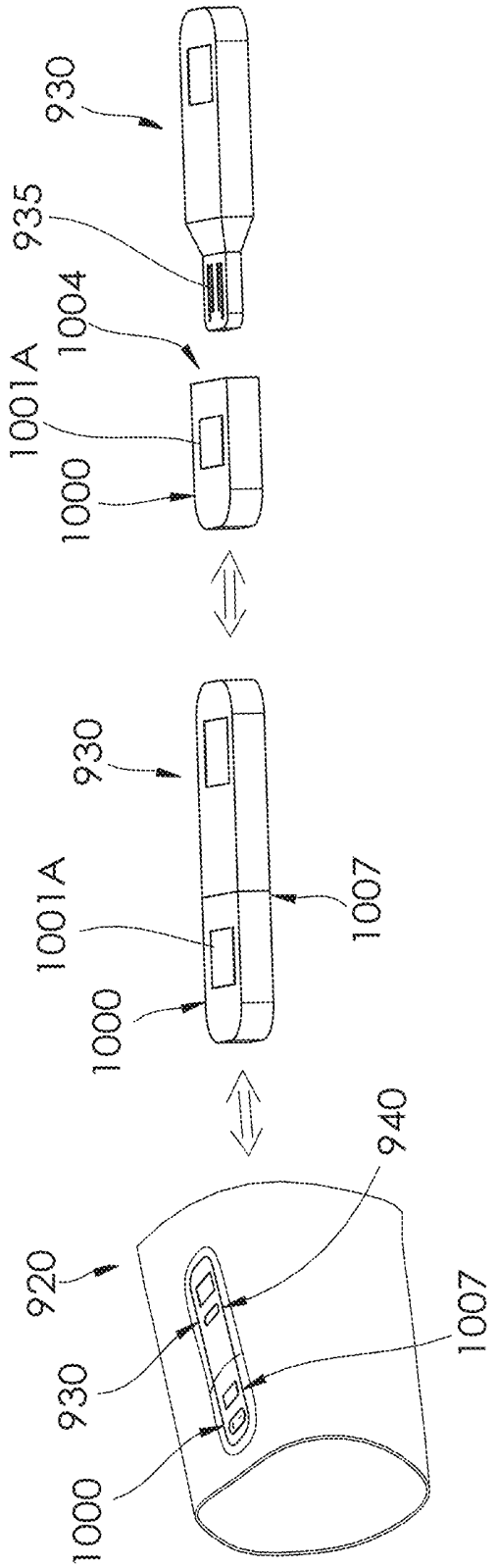
930
935
1004
1001A
1000
930
1001A
1007
1000
920
940
930
1007
1000

FIG. 110

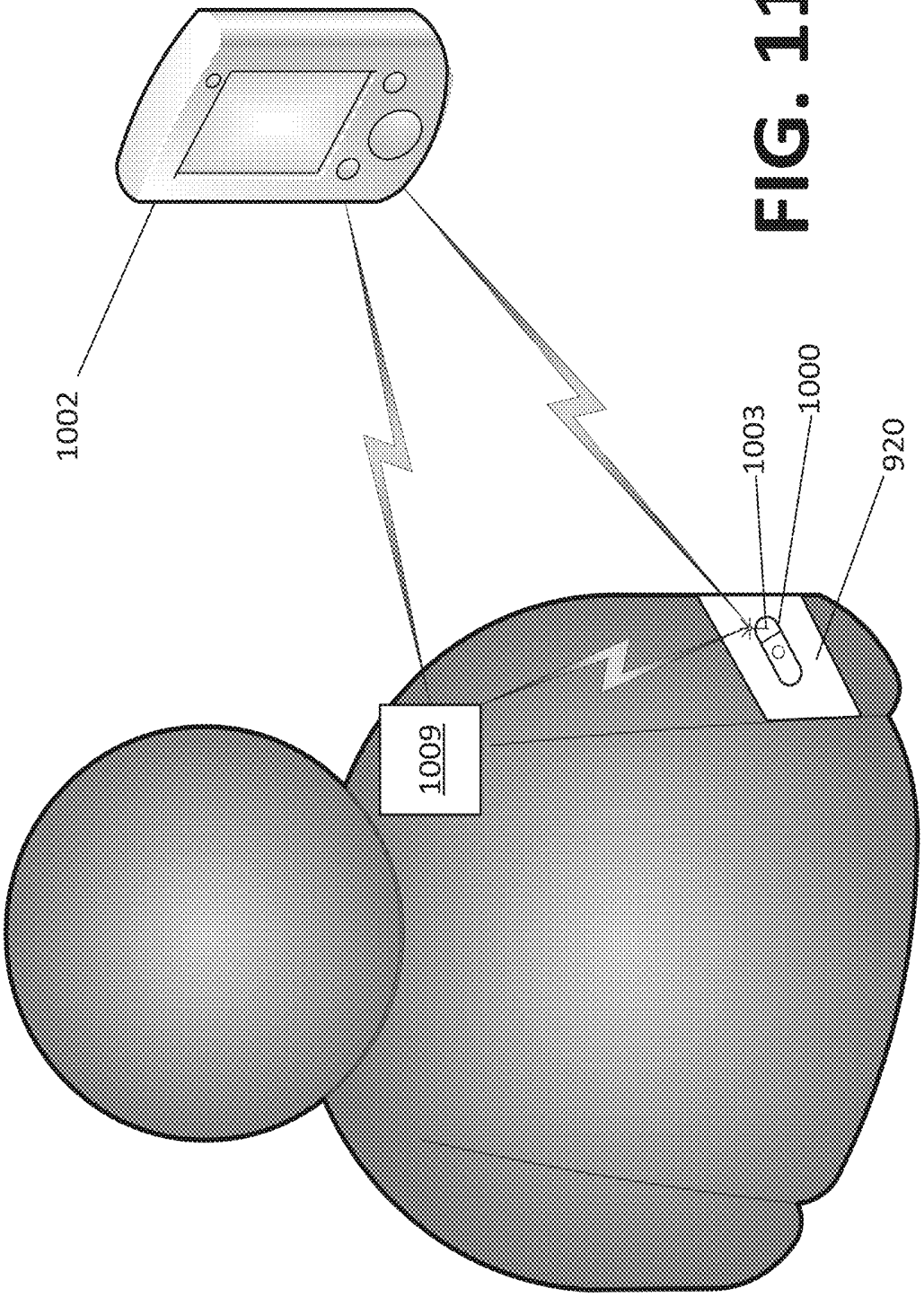


FIG. 111

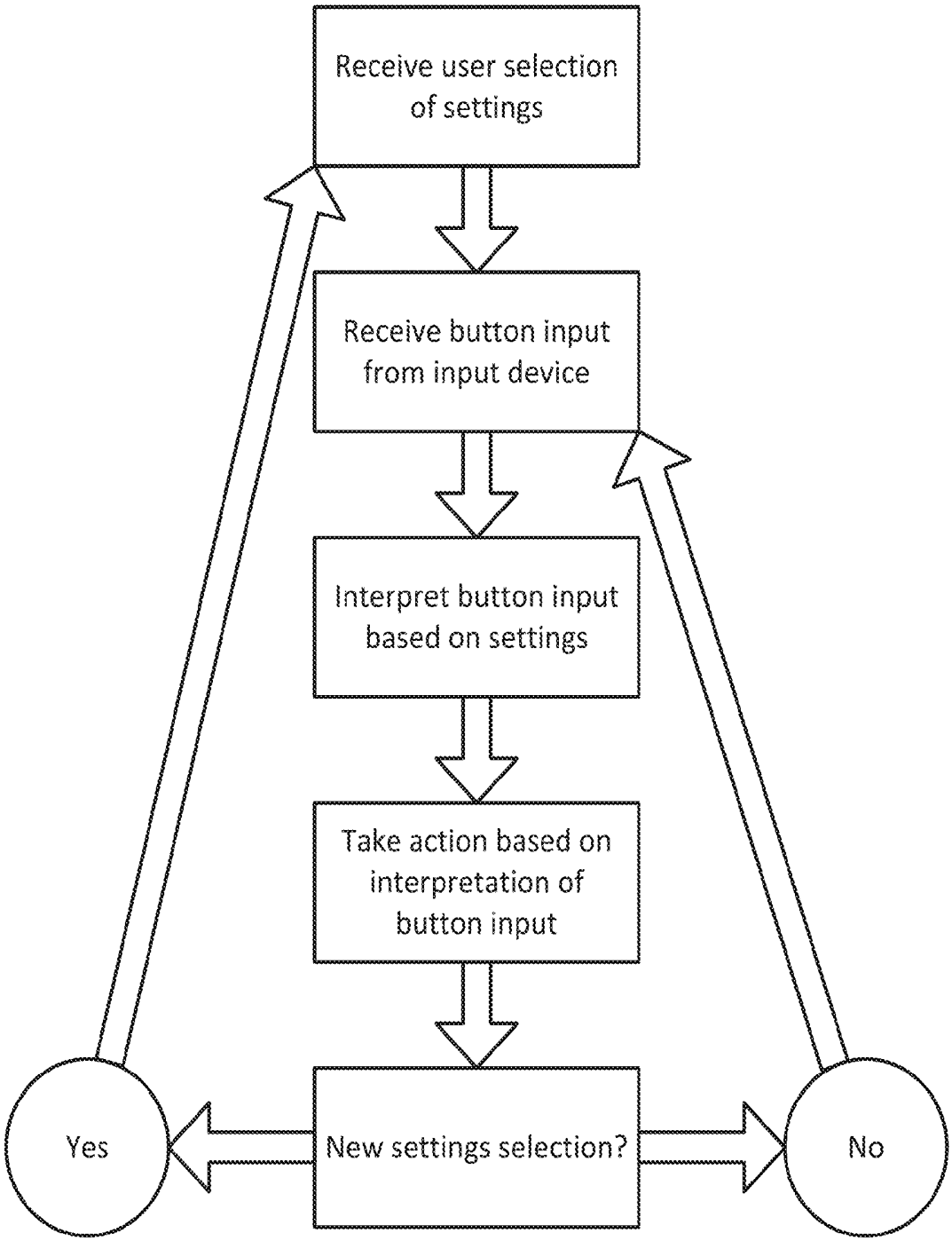
Receive user selection of settings
Receive button input from input device
Interpret button input based on settings
Take action based on interpretation of button input
New settings selection?
Yes
No

FIG. 112

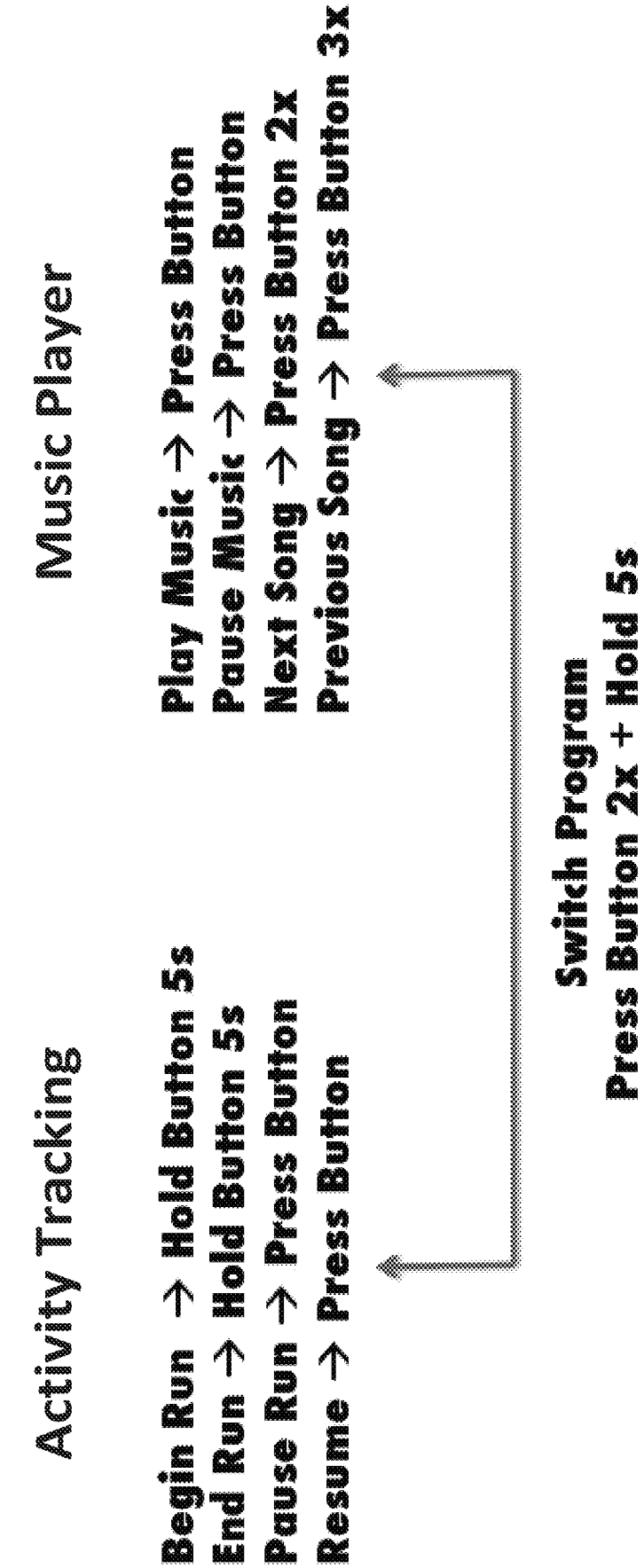
Activity Tracking
Begin Run → Hold Button 5s
End Run → Hold Button 5s
Pause Run → Press Button
Resume → Press Button
Switch Program
Press Button 2x + Hold 5s
Music Player
Play Music → Press Button
Pause Music → Press Button
Next Song → Press Button 2x
Previous Song → Press Button 3x

FIG. 113

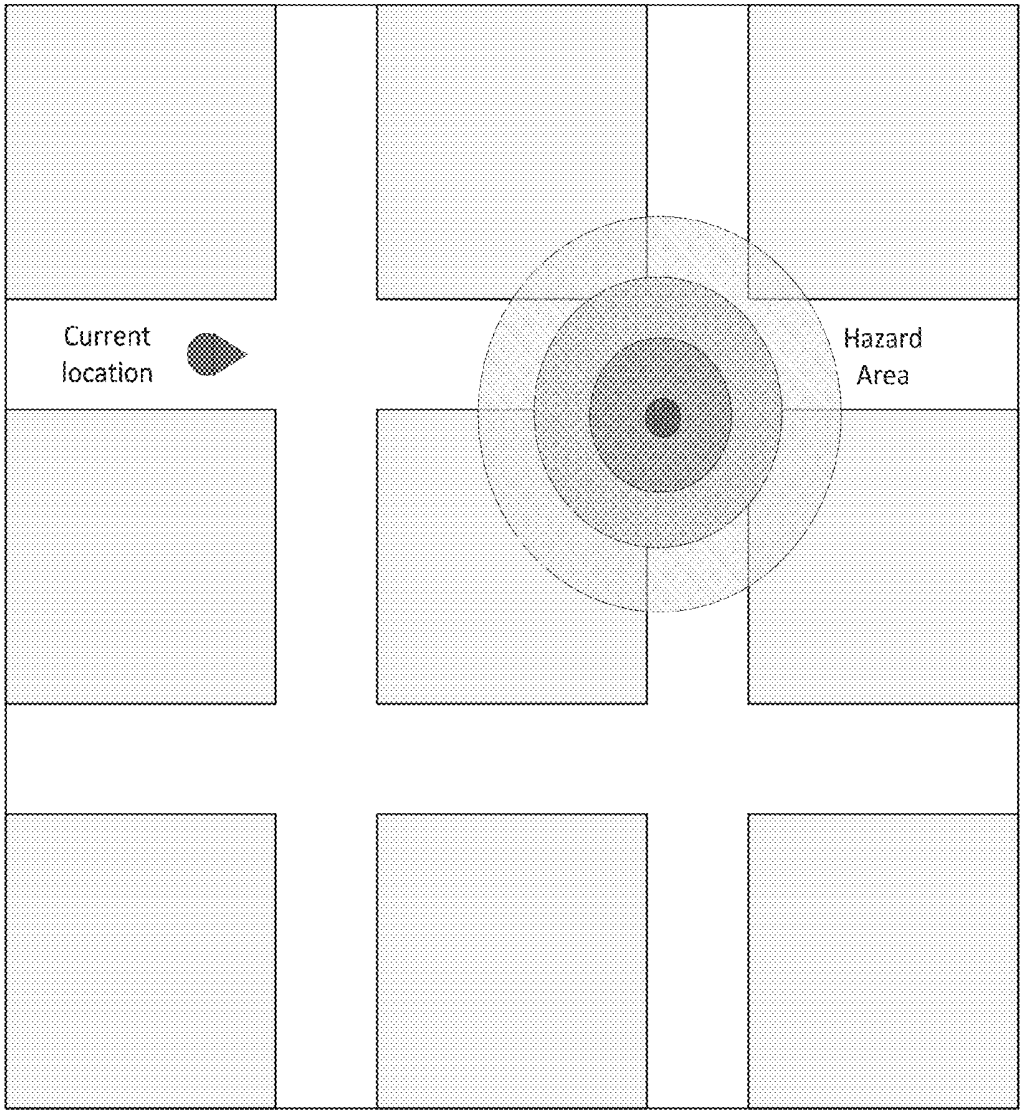


FIG. 114

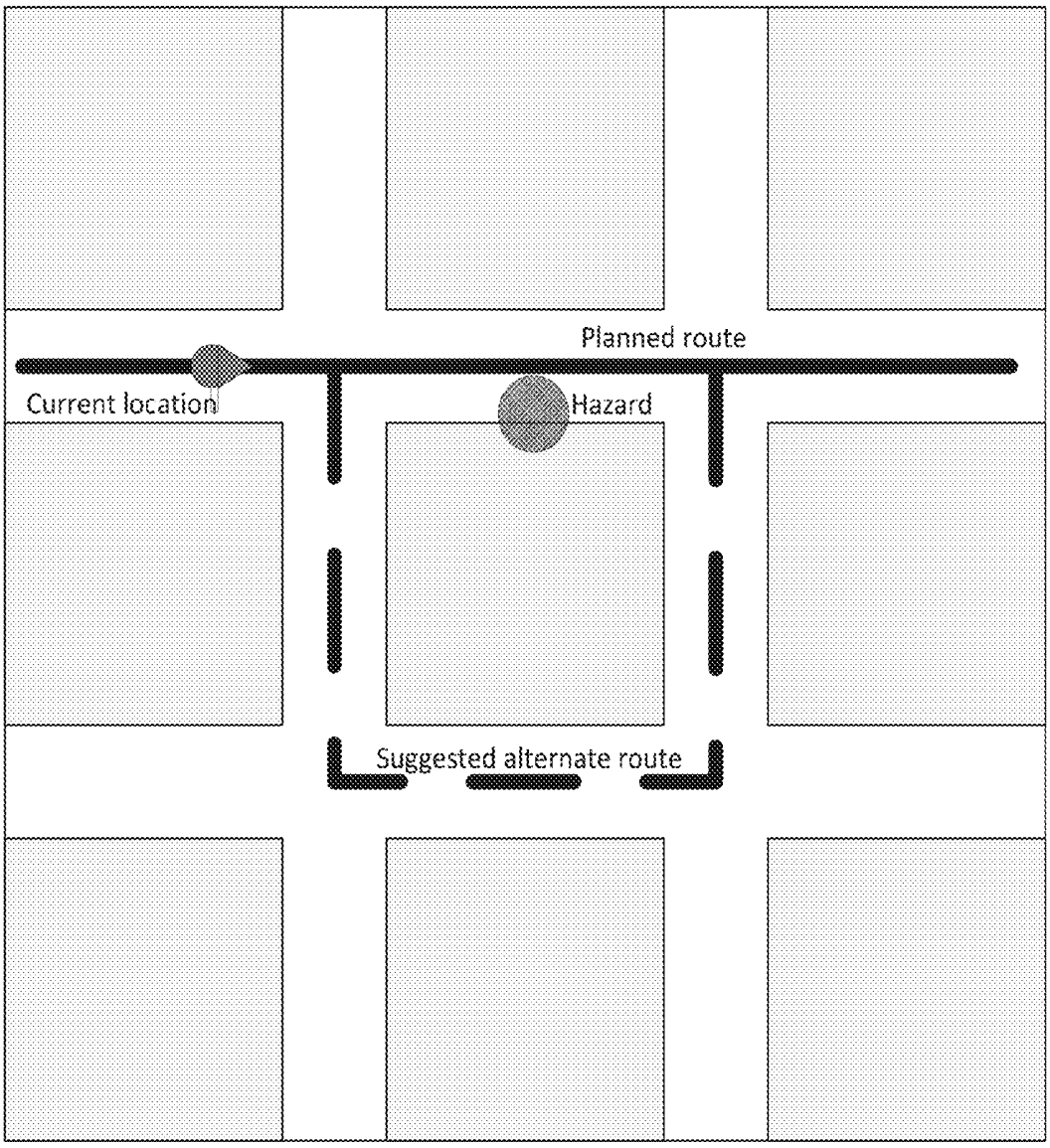
Planned route
Current location
Hazard
Suggested alternate route

FIG. 115

# ATHLETIC BAND WITH REMOVABLE MODULE

## CROSS-REFERENCE TO RELATED APPLICATIONS

This application is a non-provisional of and claims priority to U.S. Provisional Application No. 62/082,113, filed Nov. 19, 2014; U.S. Provisional Application No. 62/100,782, filed Jan. 7, 2015; U.S. Provisional Application No. 62/146,029, filed Apr. 10, 2015; U.S. Provisional Application No. 62/168,357, filed May 29, 2015; U.S. Provisional Application No. 62/168,502, filed May 29, 2015; and U.S. Provisional Application No. 62/215,497, filed Sep. 8, 2015, which prior applications are incorporated herein by reference and made part hereof.

## FIELD OF THE INVENTION

The present invention relates to apparel. Aspects of the invention concern, more particularly, an article of apparel that incorporates an electronic device that is retained within the article of apparel yet operable, and may be partially viewable, from outside the article of apparel.

## BACKGROUND OF THE INVENTION

When engaged in a physical activity, such as running, an athlete wants to maintain a focus on the activity. Although many mobile devices may be updated to include "apps" or modules that provide athletic or fitness-related information, they are often ineffective for many athletes, including those involved in intense physical activities. Removing an electronic device, such as a mobile phone or music player from a pocket to operate the device can be distracting to the athlete. In addition, the athlete may drop the device while fumbling to remove or replace the device from a pocket. Further, many athletes, including but not limited to professional, semi-professional, and league players are bound by rules and regulations which can greatly restrict the materials worn by the athlete during a game or tournament. Unfortunately, historically acceptable apparel was not designed to allow reliable reception of athletic sensing devices. This disclosure addresses these and other shortcomings of the prior art.

## BRIEF SUMMARY OF THE INVENTION

Aspects of the present invention include an article of apparel, such as an armband, wristband, shirt, or jacket that is configured to retain an electronic module. The article of apparel has a pocket having an opening to permit insertion and removal of an electronic module.

## BRIEF DESCRIPTION OF THE DRAWINGS

FIG. **1** illustrates an example system that may be configured to provide personal training and/or obtain data from the physical movements of a user in accordance with example embodiments;

FIG. **2** illustrates an example computer device that may be part of or in communication with the system of FIG. **1**.

FIG. **3** shows an illustrative sensor assembly that may be worn by a user in accordance with example embodiments;

FIG. **4** shows another example sensor assembly that may be worn by a user in accordance with example embodiments;



FIG. **5** shows illustrative locations for sensory input which may include physical sensors located on/in a user's clothing and/or be based upon identification of relationships between two moving body parts of the user;

FIG. **6** shows a chart comparing different exercises to the mean of a sensor's output based upon different movements;

FIG. **7** is a flowchart that may be utilized in the creation or modification of a heart-rate measurement protocol in accordance with certain embodiments;

FIGS. **8-10** show charts correlating Body Mass Index (BMI) with a performance score in accordance with various examples discloses herein. Specifically, FIG. **8** shows the correlation of BMI with the performance score amongst a full population sample, FIG. **9** shows the correlation amongst the male individuals of the population sample, and FIG. **10** shows the correlation amongst the female individuals of the population sample;

FIG. **11** is a perspective view of one embodiment of a band according to aspects of the disclosure;

FIG. **12** is a top view of the band of FIG. **11**;

FIGS. **13**A-B are perspective views of another embodiment of a band according to aspects of the disclosure, turned inside-out;

FIG. **14** is a top view of another embodiment of a band according to aspects of the disclosure;

FIG. **15**A is a perspective view and a side view of another embodiment of a band according to aspects of the disclosure;

FIG. **15**B is a perspective view and a side view of another embodiment of a band according to aspects of the disclosure;

FIG. **16** shows two cross-section views of two additional embodiments of a band according to aspects of the disclosure;

FIG. **17** is a top view and a side view of another embodiment of a band according to aspects of the disclosure;

FIGS. **18-30** are top views of components for manufacturing a band according to aspects of the disclosure;

FIGS. **31-38** are plan views schematically illustrating a method of manufacturing a band according to aspects of the disclosure, using the components of FIGS. **18-30**;

FIG. **39**A is a top view and a side view of another embodiment of a band according to aspects of the disclosure;

FIG. **39**B is a top view and a side view of another embodiment of a band according to aspects of the disclosure;

FIG. **40**A is a top view of another embodiment of a band according to aspects of the disclosure, with some components used in manufacturing the band;

FIG. **40**B is a top view of another embodiment of a band according to aspects of the disclosure, with some components used in manufacturing the band;

FIG. **41** shows top perspective and bottom perspective views of one embodiment of a module according to aspects of the disclosure;

FIG. **42** is a top view of another embodiment of a module according to aspects of the disclosure;

FIG. **43** shows bottom perspective, top perspective, top, and bottom views, from left to right, of another embodiment of a module according to aspects of the disclosure;

FIG. **44** shows bottom perspective, top perspective, top, and bottom views, from left to right, of another embodiment of a module according to aspects of the disclosure;

FIG. **45** shows bottom perspective, top perspective, top, and bottom views, from left to right, of another embodiment of a module according to aspects of the disclosure;

FIG. **46** shows top perspective and bottom perspective views, from left to right, of another embodiment of a module according to aspects of the disclosure;

FIG. **47** shows top perspective and bottom perspective views, from left to right, of another embodiment of a module according to aspects of the disclosure;

FIG. **48** shows top perspective and bottom perspective views, from left to right, of another embodiment of a module according to aspects of the disclosure;

FIG. **49** shows top perspective and bottom perspective views, from left to right, of another embodiment of a module according to aspects of the disclosure;

FIG. **50** shows top perspective and bottom perspective views, from left to right, of another embodiment of a module according to aspects of the disclosure;

FIG. **51** shows top perspective and bottom perspective views, from left to right, of another embodiment of a module according to aspects of the disclosure;

FIG. **52** shows top perspective and bottom perspective views, from left to right, of another embodiment of a module according to aspects of the disclosure;

FIG. **53** shows top perspective and bottom perspective views, from left to right, of another embodiment of a module according to aspects of the disclosure;

FIG. **54** shows top perspective and bottom perspective views, from left to right, of another embodiment of a module according to aspects of the disclosure;

FIG. **55** shows top perspective and bottom perspective views, from left to right, of another embodiment of a module according to aspects of the disclosure;

FIG. **56** shows top perspective and bottom perspective views, from left to right, of another embodiment of a module according to aspects of the disclosure;

FIG. **57** is a top perspective view of another embodiment of a module according to aspects of the disclosure;

FIG. **58** is a top perspective view of another embodiment of a module according to aspects of the disclosure;

FIG. **59** is a front view of the module of FIG. **58**;

FIG. **60** is a top perspective view of another embodiment of a module according to aspects of the disclosure;

FIG. **61** is a bottom perspective view of the module of FIG. **60**;

FIG. **62** is a side view of the module of FIG. **60**;

FIG. **63** is a bottom perspective view of the module of FIG. **60**, with a retaining structure connected to the module;

FIG. **64** is a perspective view of one embodiment of a mold for manufacturing a band according to aspects of the disclosure;

FIG. **65** is a cross-sectional view of the mold of FIG. **64** along a longitudinal axis;

FIG. **66** is a cross-sectional view of the mold of FIG. **64** along a lateral axis;

FIG. **67** is a magnified view of a portion of the mold as shown in FIG. **66**;

FIG. **68** is a top view of another embodiment of a band according to aspects of the disclosure;

FIG. **69** is a top view of the band of FIG. **68**, turned inside-out;

FIG. **70**A is top view of the band of FIG. **68**, turned inside out;

FIG. **70**B is top view of the band of FIG. **68**;

FIG. **70**C is bottom view of the band of FIG. **68**;

FIGS. **71-73** are top views of components for manufacturing the band as shown in FIGS. **68-70**C;

FIG. **74** is a top view of a housing of the band as shown in FIGS. **68-70**C;

FIG. **75** is a bottom view of the housing of FIG. **74**;

FIGS. **76-77** are top views of additional components for manufacturing the band as shown in FIGS. **68-70**C;

FIG. **78** is a side view of the housing of FIG. **74**;

FIG. **79** is a bottom perspective view of the housing of FIG. **74**;

FIG. **80** is a bottom perspective view of the housing of FIG. **74**;

FIG. **81** is a top perspective view of the housing of FIG. **74**;

FIG. **82** is a side view of the housing of FIG. **74**;

FIGS. **83-91** are plan views schematically illustrating a method of manufacturing a band according to aspects of the disclosure, using the components and housing of FIGS. **71-82**;

FIG. **92** is a top view of another embodiment of a band according to aspects of the disclosure, with a portion of the band shown in greater detail in an inset;

FIG. **93** is a top view of another embodiment of a band according to aspects of the disclosure, with a portion of the band shown in greater detail in an inset;

FIG. **94** is a perspective view schematically illustrating one embodiment of a mold for heat pressing a portion of a band according to aspects of the disclosure, along with the housing of FIG. **74**, which is usable in connection with the method of FIGS. **83-91**;

FIG. **95** is a perspective view schematically illustrating use of the mold of FIG. **94** in operation;

FIG. **96** is a bottom view of another embodiment of a band according to aspects of the disclosure, illustrating certain physical dimensions of the band;

FIG. **96**A is a schematic view of one embodiment of a band according to aspects of the disclosure, illustrating the calculation of the slope of the band;

FIG. **97** is a top perspective view of another embodiment of a housing usable in manufacturing a band according to aspects of the disclosure;

FIG. **98** is a bottom perspective view of the housing of FIG. **97**;

FIG. **99** is a top perspective view of the housing of FIG. **97**;

FIG. **100** is a bottom perspective view of another embodiment of a housing usable in manufacturing a band according to aspects of the disclosure;

FIG. **101** is a top perspective view of the housing of FIG. **100**;

FIG. **102** is a bottom perspective view of one embodiment of a housing and additional input device that is usable in connection with a band and module according to aspects of the disclosure;

FIG. **103** is a top perspective view of the housing and additional input device of FIG. **102**;

FIG. **104** is a bottom perspective view of one embodiment of a housing and additional input device that is usable in connection with a band and module according to aspects of the disclosure;

FIG. **105** is a top perspective view of the housing and additional input device of FIG. **104**;

FIG. **106** is a bottom perspective view of the housing of FIG. **102** and the module of FIG. **60** being inserted into the housing;

FIG. **107** is a perspective view and an exploded perspective view of another embodiment of an additional input

device and a module according to aspects of the disclosure, showing a connection between the additional input device and the module;

FIG. **108** is a perspective view and an exploded perspective view of another embodiment of an additional input device and a module according to aspects of the disclosure, showing a connection between the additional input device and the module;

FIG. **109** is a perspective view of one embodiment of a band having an additional input device connected to the band, according to aspects of the disclosure;

FIG. **110** is a schematic perspective view of another embodiment of a module, an additional input device, and a band according to aspects of the disclosure, showing the module being connected to the additional input device and then being connected to the band;

FIG. **111** is a schematic view illustrating another embodiment of a band with an additional input device connected to the band, with the band being worn on an arm of a user, and with the additional input device being in communication with one or more external devices;

FIG. **112** is a flowchart showing one embodiment of a method of operation that can be used in connection with an external device and an additional input device according to aspects of the disclosure;

FIG. **113** is a flowchart showing another embodiment of a method of operation that can be used in connection with an external device and an additional input device according to aspects of the disclosure;

FIG. **114** illustrates one embodiment of a display of an external device being operated in conjunction with an additional input device according to aspects of the disclosure; and

FIG. **115** illustrates another embodiment of a display of an external device being operated in conjunction with an additional input device according to aspects of the disclosure.

## DETAILED DESCRIPTION

Aspects of this disclosure involve obtaining, storing, and/or processing athletic data relating to the physical movements of an athlete. The athletic data may be actively or passively sensed and/or stored in one or more non-transitory storage mediums. Still further aspects relate to using athletic data to generate an output, such as for example, calculated athletic attributes, feedback signals to provide guidance, and/or other information. These and other aspects will be discussed in the context of the following illustrative examples of a personal training system.

In the following description of the various embodiments, reference is made to the accompanying drawings, which form a part hereof, and in which is shown by way of illustration various embodiments in which aspects of the disclosure may be practiced. It is to be understood that other embodiments may be utilized and structural and functional modifications may be made without departing from the scope and spirit of the present disclosure. Further, headings within this disclosure should not be considered as limiting aspects of the disclosure and the example embodiments are not limited to the example headings.

### I. Example Personal Training System

#### A. Illustrative Networks

Aspects of this disclosure relate to systems and methods that may be utilized across a plurality of networks. In this regard, certain embodiments may be configured to adapt to dynamic network environments. Further embodiments may be operable in differing discrete network environments. FIG. **1** illustrates an example of a personal training system **100** in accordance with example embodiments. Example system **100** may include one or more interconnected networks, such as the illustrative body area network (BAN) **102**, local area network (LAN) **104**, and wide area network (WAN) **106**. As shown in FIG. **1** (and described throughout this disclosure), one or more networks (e.g., BAN **102**, LAN **104**, and/or WAN **106**), may overlap or otherwise be inclusive of each other. Those skilled in the art will appreciate that the illustrative networks **102-106** are logical networks that may each comprise one or more different communication protocols and/or network architectures and yet may be configured to have gateways to each other or other networks. For example, each of BAN **102**, LAN **104** and/or WAN **106** may be operatively connected to the same physical network architecture, such as cellular network architecture **108** and/or WAN architecture **110**. For example, portable electronic device **112**, which may be considered a component of both BAN **102** and LAN **104**, may comprise a network adapter or network interface card (NIC) configured to translate data and control signals into and from network messages according to one or more communication protocols, such as the Transmission Control Protocol (TCP), the Internet Protocol (IP), and the User Datagram Protocol (UDP) through one or more of architectures **108** and/or **110**. These protocols are well known in the art, and thus will not be discussed here in more detail.

Network architectures **108** and **110** may include one or more information distribution network(s), of any type(s) or topology(s), alone or in combination(s), such as for example, cable, fiber, satellite, telephone, cellular, wireless, etc. and as such, may be variously configured such as having one or more wired or wireless communication channels (including but not limited to: WiFi®, Bluetooth®, Near-Field Communication (NFC) and/or ANT technologies). Thus, any device within a network of FIG. **1**, (such as portable electronic device **112** or any other device described herein) may be considered inclusive to one or more of the different logical networks **102-106**. With the foregoing in mind, example components of an illustrative BAN and LAN (which may be coupled to WAN **106**) will be described.

1. Example Local Area Network

LAN **104** may include one or more electronic devices, such as for example, computer device **114**. Computer device **114**, or any other component of system **100**, may comprise a mobile terminal, such as a telephone, music player, tablet, netbook or any portable device. In other embodiments, computer device **114** may comprise a media player or recorder, desktop computer, server(s), a gaming console, such as for example, a Microsoft® XBOX, Sony® Playstation, and/or a Nintendo® Wii gaming consoles. Those skilled in the art will appreciate that these are merely example devices for descriptive purposes and this disclosure is not limited to any console or computing device.

Those skilled in the art will appreciate that the design and structure of computer device **114** may vary depending on several factors, such as its intended purpose. One example implementation of computer device **114** is provided in FIG. **2**, which illustrates a block diagram of computing device **200**. Those skilled in the art will appreciate that the disclosure of FIG. **2** may be applicable to any device disclosed herein. Device **200** may include one or more processors, such as processor **202-1** and **202-2** (generally referred to herein as "processors **202**" or "processor **202**"). Processors **202** may communicate with each other or other components via an interconnection network or bus **204**. Processor **202** may include one or more processing cores, such as cores

206-1 and 206-2 (referred to herein as "cores 206" or more generally as "core 206"), which may be implemented on a single integrated circuit (IC) chip.

Cores 206 may comprise a shared cache 208 and/or a private cache (e.g., caches 210-1 and 210-2, respectively). One or more caches 208/210 may locally cache data stored in a system memory, such as memory 212, for faster access by components of the processor 202. Memory 212 may be in communication with the processors 202 via a chipset 216. Cache 208 may be part of system memory 212 in certain embodiments. Memory 212 may include, but is not limited to, random access memory (RAM), read only memory (ROM), and include one or more of solid-state memory, optical or magnetic storage, and/or any other medium that can be used to store electronic information. Yet other embodiments may omit system memory 212.

System 200 may include one or more I/O devices (e.g., I/O devices 214-1 through 214-3, each generally referred to as I/O device 214). I/O data from one or more I/O devices 214 may be stored at one or more caches 208, 210 and/or system memory 212. Each of I/O devices 214 may be permanently or temporarily configured to be in operative communication with a component of system 100 using any physical or wireless communication protocol.

Returning to FIG. 1, four example I/O devices (shown as elements 116-122) are shown as being in communication with computer device 114. Those skilled in the art will appreciate that one or more of devices 116-122 may be stand-alone devices or may be associated with another device besides computer device 114. For example, one or more I/O devices may be associated with or interact with a component of BAN 102 and/or WAN 106. I/O devices 116-122 may include, but are not limited to athletic data acquisition units, such as for example, sensors. One or more I/O devices may be configured to sense, detect, and/or measure an athletic parameter from a user, such as user 124. Examples include, but are not limited to: an accelerometer, a gyroscope, a location-determining device (e.g., GPS), light (including non-visible light) sensor, temperature sensor (including ambient temperature and/or body temperature), sleep pattern sensors, heart rate monitor, image-capturing sensor, moisture sensor, force sensor, compass, angular rate sensor, and/or combinations thereof among others.

In further embodiments, I/O devices 116-122 may be used to provide an output (e.g., audible, visual, or tactile cue) and/or receive an input, such as a user input from athlete 124. Example uses for these illustrative I/O devices are provided below, however, those skilled in the art will appreciate that such discussions are merely descriptive of some of the many options within the scope of this disclosure. Further, reference to any data acquisition unit, I/O device, or sensor is to be interpreted disclosing an embodiment that may have one or more I/O device, data acquisition unit, and/or sensor disclosed herein or known in the art (either individually or in combination).

Information from one or more devices (across one or more networks) may be used to provide (or be utilized in the formation of) a variety of different parameters, metrics or physiological characteristics including but not limited to: motion parameters, such as speed, acceleration, distance, steps taken, direction, relative movement of certain body portions or objects to others, or other motion parameters which may be expressed as angular rates, rectilinear rates or combinations thereof, physiological parameters, such as calories, heart rate, sweat detection, effort, oxygen consumed, oxygen kinetics, and other metrics which may fall within one or more categories, such as: pressure, impact forces, information regarding the athlete, such as height, weight, age, demographic information and combinations thereof.

System 100 may be configured to transmit and/or receive athletic data, including the parameters, metrics, or physiological characteristics collected within system 100 or otherwise provided to system 100. As one example, WAN 106 may comprise server 111. Server 111 may have one or more components of system 200 of FIG. 2. In one embodiment, server 111 comprises at least a processor and a memory, such as processor 206 and memory 212. Server 111 may be configured to store computer-executable instructions on a non-transitory computer-readable medium. The instructions may comprise athletic data, such as raw or processed data collected within system 100. System 100 may be configured to transmit data, such as energy expenditure points, to a social networking website or host such a site. Server 111 may be utilized to permit one or more users to access and/or compare athletic data. As such, server 111 may be configured to transmit and/or receive notifications based upon athletic data or other information.

Returning to LAN 104, computer device 114 is shown in operative communication with a display device 116, an image-capturing device 118, sensor 120 and exercise device 122, which are discussed in turn below with reference to example embodiments. In one embodiment, display device 116 may provide audio-visual cues to athlete 124 to perform a specific athletic movement. The audio-visual cues may be provided in response to computer-executable instruction executed on computer device 114 or any other device, including a device of BAN 102 and/or WAN. Display device 116 may be a touchscreen device or otherwise configured to receive a user-input.

In one embodiment, data may be obtained from image-capturing device 118 and/or other sensors, such as sensor 120, which may be used to detect (and/or measure) athletic parameters, either alone or in combination with other devices, or stored information. Image-capturing device 118 and/or sensor 120 may comprise a transceiver device. In one embodiment sensor 128 may comprise an infrared (IR), electromagnetic (EM) or acoustic transceiver. For example, image-capturing device 118, and/or sensor 120 may transmit waveforms into the environment, including towards the direction of athlete 124 and receive a "reflection" or otherwise detect alterations of those released waveforms. Those skilled in the art will readily appreciate that signals corresponding to a multitude of different data spectrums may be utilized in accordance with various embodiments. In this regard, devices 118 and/or 120 may detect waveforms emitted from external sources (e.g., not system 100). For example, devices 118 and/or 120 may detect heat being emitted from user 124 and/or the surrounding environment. Thus, image-capturing device 126 and/or sensor 128 may comprise one or more thermal imaging devices. In one embodiment, image-capturing device 126 and/or sensor 128 may comprise an IR device configured to perform range phenomenology.

In one embodiment, exercise device 122 may be any device configurable to permit or facilitate the athlete 124 performing a physical movement, such as for example a treadmill, step machine, etc. There is no requirement that the device be stationary. In this regard, wireless technologies permit portable devices to be utilized, thus a bicycle or other mobile exercising device may be utilized in accordance with certain embodiments. Those skilled in the art will appreciate that equipment 122 may be or comprise an interface for receiving an electronic device containing athletic data per-

formed remotely from computer device **114**. For example, a user may use a sporting device (described below in relation to BAN **102**) and upon returning home or the location of equipment **122**, download athletic data into element **122** or any other device of system **100**. Any I/O device disclosed herein may be configured to receive activity data.

2. Body Area Network

BAN **102** may include two or more devices configured to receive, transmit, or otherwise facilitate the collection of athletic data (including passive devices). Exemplary devices may include one or more data acquisition units, sensors, or devices known in the art or disclosed herein, including but not limited to I/O devices **116-122**. Two or more components of BAN **102** may communicate directly, yet in other embodiments, communication may be conducted via a third device, which may be part of BAN **102**, LAN **104**, and/or WAN **106**. One or more components of LAN **104** or WAN **106** may form part of BAN **102**. In certain implementations, whether a device, such as portable device **112**, is part of BAN **102**, LAN **104**, and/or WAN **106**, may depend on the athlete's proximity to an access point to permit communication with mobile cellular network architecture **108** and/or WAN architecture **110**. User activity and/or preference may also influence whether one or more components are utilized as part of BAN **102**. Example embodiments are provided below.

User **124** may be associated with (e.g., possess, carry, wear, and/or interact with) any number of devices, such as portable device **112**, shoe-mounted device **126**, wrist-worn device **128** and/or a sensing location, such as sensing location **130**, which may comprise a physical device or a location that is used to collect information. One or more devices **112**, **126**, **128**, and/or **130** may not be specially designed for fitness or athletic purposes. Indeed, aspects of this disclosure relate to utilizing data from a plurality of devices, some of which are not fitness devices, to collect, detect, and/or measure athletic data. In certain embodiments, one or more devices of BAN **102** (or any other network) may comprise a fitness or sporting device that is specifically designed for a particular sporting use. As used herein, the term "sporting device" includes any physical object that may be used or implicated during a specific sport or fitness activity. Exemplary sporting devices may include, but are not limited to: golf balls, basketballs, baseballs, soccer balls, footballs, powerballs, hockey pucks, weights, bats, clubs, sticks, paddles, mats, and combinations thereof. In further embodiments, exemplary fitness devices may include objects within a sporting environment where a specific sport occurs, including the environment itself, such as a goal net, hoop, backboard, portions of a field, such as a midline, outer boundary marker, base, and combinations thereof.

In this regard, those skilled in the art will appreciate that one or more sporting devices may also be part of (or form) a structure and vice-versa, a structure may comprise one or more sporting devices or be configured to interact with a sporting device. For example, a first structure may comprise a basketball hoop and a backboard, which may be removable and replaced with a goal post. In this regard, one or more sporting devices may comprise one or more sensors, such as one or more of the sensors discussed above in relation to FIGS. **1-3**, that may provide information utilized, either independently or in conjunction with other sensors, such as one or more sensors associated with one or more structures. For example, a backboard may comprise a first sensor configured to measure a force and a direction of the force by a basketball upon the backboard and the hoop may comprise a second sensor to detect a force. Similarly, a golf club may comprise a first sensor configured to detect grip attributes on the shaft and a second sensor configured to measure impact with a golf ball.

Looking to the illustrative portable device **112**, it may be a multi-purpose electronic device, that for example, includes a telephone or digital music player, including an IPOD®, IPAD®, or iPhone®, brand devices available from Apple, Inc. of Cupertino, Calif. or Zune® or Microsoft® Windows devices available from Microsoft of Redmond, Wash. As known in the art, digital media players can serve as an output device, input device, and/or storage device for a computer. Device **112** may be configured as an input device for receiving raw or processed data collected from one or more devices in BAN **102**, LAN **104**, or WAN **106**. In one or more embodiments, portable device **112** may comprise one or more components of computer device **114**. For example, portable device **112** may be include a display **116**, image-capturing device **118**, and/or one or more data acquisition devices, such as any of the I/O devices **116-122** discussed above, with or without additional components, so as to comprise a mobile terminal.

a. Illustrative Apparel/Accessory Sensors

In certain embodiments, I/O devices may be formed within or otherwise associated with user's **124** clothing or accessories, including a watch, armband, wristband, necklace, shirt, shoe, or the like. These devices may be configured to monitor athletic movements of a user. It is to be understood that they may detect athletic movement during user's **124** interactions with computer device **114** and/or operate independently of computer device **114** (or any other device disclosed herein). For example, one or more devices in BAN **102** may be configured to function as an all-day activity monitor that measures activity regardless of the user's proximity or interactions with computer device **114**. It is to be further understood that the sensory system **302** shown in FIG. **3** and the device assembly **400** shown in FIG. **4**, each of which are described in the following paragraphs, are merely illustrative examples.

i. Shoe-Mounted Device

In certain embodiments, device **126** shown in FIG. **1**, may comprise footwear which may include one or more sensors, including but not limited to those disclosed herein and/or known in the art. FIG. **3** illustrates one example embodiment of a sensor system **302** providing one or more sensor assemblies **304**. Assembly **304** may comprise one or more sensors, such as for example, an accelerometer, gyroscope, location-determining components, force sensors and/or or any other sensor disclosed herein or known in the art. In the illustrated embodiment, assembly **304** incorporates a plurality of sensors, which may include force-sensitive resistor (FSR) sensors **306**; however, other sensor(s) may be utilized. Port **308** may be positioned within a sole structure **309** of a shoe, and is generally configured for communication with one or more electronic devices. Port **308** may optionally be provided to be in communication with an electronic module **310**, and the sole structure **309** may optionally include a housing **311** or other structure to receive the module **310**. The sensor system **302** may also include a plurality of leads **312** connecting the FSR sensors **306** to the port **308**, to enable communication with the module **310** and/or another electronic device through the port **308**. Module **310** may be contained within a well or cavity in a sole structure of a shoe, and the housing **311** may be positioned within the well or cavity. In one embodiment, at least one gyroscope and at least one accelerometer are provided within a single housing, such as module **310** and/or housing **311**. In at least a further embodiment, one or more sensors are provided that,

when operational, are configured to provide directional information and angular rate data. The port **308** and the module **310** include complementary interfaces **314**, **316** for connection and communication.

In certain embodiments, at least one force-sensitive resistor **306** shown in FIG. **3** may contain first and second electrodes or electrical contacts **318**, **320** and a force-sensitive resistive material **322** disposed between the electrodes **318**, **320** to electrically connect the electrodes **318**, **320** together. When pressure is applied to the force-sensitive material **322**, the resistivity and/or conductivity of the force-sensitive material **322** changes, which changes the electrical potential between the electrodes **318**, **320**. The change in resistance can be detected by the sensor system **302** to detect the force applied on the sensor **316**. The force-sensitive resistive material **322** may change its resistance under pressure in a variety of ways. For example, the force-sensitive material **322** may have an internal resistance that decreases when the material is compressed. Further embodiments may utilize "volume-based resistance", which may be implemented through "smart materials." As another example, the material **322** may change the resistance by changing the degree of surface-to-surface contact, such as between two pieces of the force sensitive material **322** or between the force sensitive material **322** and one or both electrodes **318**, **320**. In some circumstances, this type of force-sensitive resistive behavior may be described as "contact-based resistance."

ii. Wrist-Worn Device

As shown in FIG. **4**, device **400** (which may resemble or comprise sensory device **128** shown in FIG. **1**), may be configured to be worn by user **124**, such as around a wrist, arm, ankle, neck or the like. Device **400** may include an input mechanism, such as a depressible input button **402** configured to be used during operation of the device **400**. The input button **402** may be operably connected to a controller **404** and/or any other electronic components, such as one or more of the elements discussed in relation to computer device **114** shown in FIG. **1**. Controller **404** may be embedded or otherwise part of housing **406**. Housing **406** may be formed of one or more materials, including elastomeric components and comprise one or more displays, such as display **408**. The display may be considered an illuminable portion of the device **400**. The display **408** may include a series of individual lighting elements or light members such as LED lights **410**. The lights may be formed in an array and operably connected to the controller **404**. Device **400** may include an indicator system **412**, which may also be considered a portion or component of the overall display **408**. Indicator system **412** can operate and illuminate in conjunction with the display **408** (which may have pixel member **414**) or completely separate from the display **408**. The indicator system **412** may also include a plurality of additional lighting elements or light members, which may also take the form of LED lights in an exemplary embodiment. In certain embodiments, indicator system may provide a visual indication of goals, such as by illuminating a portion of lighting members of indicator system **412** to represent accomplishment towards one or more goals. Device **400** may be configured to display data expressed in terms of activity points or currency earned by the user based on the activity of the user, either through display **408** and/or indicator system **412**.

A fastening mechanism **416** can be disengaged wherein the device **400** can be positioned around a wrist or portion of the user **124** and the fastening mechanism **416** can be subsequently placed in an engaged position. In one embodiment, fastening mechanism **416** may comprise an interface, including but not limited to a USB port, for operative interaction with computer device **114** and/or devices, such as devices **120** and/or **112**. In certain embodiments, fastening member may comprise one or more magnets. In one embodiment, fastening member may be devoid of moving parts and rely entirely on magnetic forces.

In certain embodiments, device **400** may comprise a sensor assembly (not shown in FIG. **4**). The sensor assembly may comprise a plurality of different sensors, including those disclosed herein and/or known in the art. In an example embodiment, the sensor assembly may comprise or permit operative connection to any sensor disclosed herein or known in the art. Device **400** and or its sensor assembly may be configured to receive data obtained from one or more external sensors.

iii. Apparel and/or Body Location Sensing

Element **130** of FIG. **1** shows an example sensory location which may be associated with a physical apparatus, such as a sensor, data acquisition unit, or other device. Yet in other embodiments, it may be a specific location of a body portion or region that is monitored, such as via an image capturing device (e.g., image capturing device **118**). In certain embodiments, element **130** may comprise a sensor, such that elements **130***a* and **130***b* may be sensors integrated into apparel, such as athletic clothing. Such sensors may be placed at any desired location of the body of user **124**. Sensors **130***a/b* may communicate (e.g., wirelessly) with one or more devices (including other sensors) of BAN **102**, LAN **104**, and/or WAN **106**. In certain embodiments, passive sensing surfaces may reflect waveforms, such as infrared light, emitted by image-capturing device **118** and/or sensor **120**. In one embodiment, passive sensors located on user's **124** apparel may comprise generally spherical structures made of glass or other transparent or translucent surfaces which may reflect waveforms. Different classes of apparel may be utilized in which a given class of apparel has specific sensors configured to be located proximate to a specific portion of the user's **124** body when properly worn. For example, golf apparel may include one or more sensors positioned on the apparel in a first configuration and yet soccer apparel may include one or more sensors positioned on apparel in a second configuration.

FIG. **5** shows illustrative locations for sensory input (see, e.g., sensory locations **130***a*-**130***o*). In this regard, sensors may be physical sensors located on/in a user's clothing, yet in other embodiments, sensor locations **130***a*-**130***o* may be based upon identification of relationships between two moving body parts. For example, sensor location **130***a* may be determined by identifying motions of user **124** with an image-capturing device, such as image-capturing device **118**. Thus, in certain embodiments, a sensor may not physically be located at a specific location (such as one or more of sensor locations **130***a*-**130***o*), but is configured to sense properties of that location, such as with image-capturing device **118** or other sensor data gathered from other locations. In this regard, the overall shape or portion of a user's body may permit identification of certain body parts. Regardless of whether an image-capturing device is utilized and/or a physical sensor located on the user **124**, and/or using data from other devices, (such as sensory system **302**), device assembly **400** and/or any other device or sensor disclosed herein or known in the art is utilized, the sensors may sense a current location of a body part and/or track movement of the body part. In one embodiment, sensory data relating to location **130***m* may be utilized in a determination of the user's center of gravity (a.k.a, center of

mass). For example, relationships between location **130***a* and location(s) **130***f*/**130***l* with respect to one or more of location(s) **130***m*-**130***o* may be utilized to determine if a user's center of gravity has been elevated along the vertical axis (such as during a jump) or if a user is attempting to "fake" a jump by bending and flexing their knees. In one embodiment, sensor location **1306***n* may be located at about the sternum of user **124**. Likewise, sensor location **130***o* may be located approximate to the naval of user **124**. In certain embodiments, data from sensor locations **130***m*-**130***o* may be utilized (alone or in combination with other data) to determine the center of gravity for user **124**. In further embodiments, relationships between multiple sensor locations, such as sensors **130***m*-**130***o*, may be utilized in determining orientation of the user **124** and/or rotational forces, such as twisting of user's **124** torso. Further, one or more locations, such as location(s), may be utilized as (or approximate) a center of moment location. For example, in one embodiment, one or more of location(s) **130***m*-**130***o* may serve as a point for a center of moment location of user **124**. In another embodiment, one or more locations may serve as a center of moment of specific body parts or regions.

II. Athletic Band with Removable Module

Aspects of this disclosure relate to a system that may measure one or more attributes (e.g., physiological, biomedical, athletic, with the understanding that these may be overlapping examples) of a user during physical movements. In one embodiment, systems and methods may measure one or more attributes of a user while performing intense physical exercise or movements. For example, users may be participating in professional sporting activities, including but not limited to: American football, football, basketball, swimming, or a combination thereof. In one embodiment, systems and methods may consistently provide measurements from a user during exercises in which the system experiences impact forces and/or acceleration magnitudes commonly encountered during intensive activity, such as engaging in professional sports.

Certain aspects relate to a modular system that may firmly retain or otherwise hold at least one sensor against a user's skin during intense physical activities. In one embodiment, the system may be configured to retain a heart rate sensor against a user's skin during the intense physical activity in a manner that allows accurate readings during the activity. The band may further secure at least one sensor against the skin and allow for less than 1 mm of movement of the sensor with respect to the user's skin during the athletic activity or during movements commonly associated with the average forces and/or acceleration magnitudes of the specific athletic activity. In yet another embodiment, the band may be configured such that a removable sensor moves less than 0.5 mm with respect to the surface of the user's skin during the athletic activity. The system may comprise a band **920** configured to be secured against the user's skin or clothing. In one embodiment, the band is configured to be an armband, however, may be configured as a wristband, waistband, or other configuration. In one embodiment, the band **920** is configured to be worn between the user's elbow and wrist. In another embodiment, the band is configured to be worn in a location between the elbow and the shoulder.

Band **920** may be any suitable article of apparel that can be attached to the body such as, but not limited to, bands such as armbands, wristbands, leg bands, and belts. In addition, the article of apparel may be any suitable article of apparel that can be worn on the body such as shirts, jackets, coats, sweatshirts, vests, shorts, and pants, and various other articles of clothing.

In one embodiment, the band **920** may be configured without fasteners configured to retain the band around the arm. In one embodiment, the band may exhibit a modulus of elasticity that allows the band to be retained around an appendage of the user (e.g., arm) in a manner that fasteners are not required to secure the band **920** to the appendage to obtain accurate sensor readings during the activity, which may be intense athletic activity. In yet another embodiment, fasteners may be utilized to connect at least a portion or portions of the band together for attachment to the appendage. Any suitable fasteners may be used such as Velcro, snaps, buttons, buckles, and zippers as is within the skill of the art.

In another aspect of the invention, as shown in the figures herein, a wrist band or armband may be a continuous tubular band made of an elastic material that can be pulled onto the wrist or arm. As discussed below, a pocket (e.g., pocket **940**) may be attached to, or formed integrally with, the band **920**. As further discussed below, band **920** may be configured to comprise a "pocket" configured to retain an electronic module. In this regard, the band may form a seal or other surface around a portion of the user's skin in a manner that distributes forces such that at least a portion of the band **920** is held against the user's skin with a less force per unit area compared to any surface of an electronic module **930** held in the pocket **940** is pressed against the skin when the user is wearing the band **920**. Band **920** may further be configured such that a certain portion of ambient light is blocked from contacting the user's skin under the band **920**. In this regard, band **920** may block light in one or more specific regions and/or over the entire area covered by the band during normal use. In one embodiment, at least 75% of ambient light is blocked from reaching the area of the band immediate proximate to where a sensor extends from an aperture of the band and contacts the surface of the user's skin.

Generally, the device includes a band **920** configured to be worn by or otherwise attached to the body of a user and a module **930** configured to be connected to the band **920**, in order to be worn by or otherwise attached to the user. The band **920** may be an armband in one embodiment, as illustrated in FIGS. **11-12**, which is configured to be worn on the upper forearm of the user, just below the elbow. FIGS. **39**A-B also illustrate embodiments similar to the embodiments of FIGS. **11-12**. The band **920** in this embodiment includes a tubular body **921** defining a central passage **922**, such that the user's arm is received through the passage **922** and the tubular body **921** wraps around the arm. The tubular body **921** is somewhat frusto-conical in shape in the embodiment shown, with a wider top end **923** configured to be positioned closer to the elbow, and an opposite narrower bottom end **924** configured to be positioned closer to the wrist, where the arm is typically smaller. The frusto-conical shape of the tubular body **921** may assist in resisting slipping of the band **920** when worn on the user's forearm during activity. Without being bound to a particular theory, evidence indicates that the tendency of the band **920** to slip decreases with a decrease in the proportional difference between the size of the top end **923** and the size of the bottom end **924** (e.g., the "slope" of a cross-section of the tubular body **921**). FIG. **96** illustrates how the slope of an edge **994** of the tubular body **921** can be determined, with respect to the Axis X. In other words, the closer the size of the bottom end **924** is relative to the top end **923**, the less likely slippage is to occur (within limits). Evidence also indicates that larger-size bands **920** are more likely to slip than smaller-size bands **920**. Accordingly, larger-size bands **920** may be provided with a smaller difference between the

diameter of the top end **923** and the bottom end **924** relative to that of smaller-size bands **920** in one embodiment, in order to reduce slippage in the larger-size bands **920**.

Various different "slopes" defined on the tubular body **921** may be relevant to the degree of slippage of the band **920**. FIG. **96** illustrates multiple different slopes that may be calculated relative to the Axis X, which is perpendicular to the top and bottom ends **923**, **924**, using a reference point Height H in the calculation of the slopes. The Height H represents a circumferential line that is parallel to the ends **923**, **924** of the band **920** and is positioned approximately 70% of the distance between the bottom end **924** and the top end **923**, i.e., the approximate location of the sensor **932** when the module **930** is positioned within the housing **963**. It is understood that reference point Height H may be located differently if the band **920** is configured differently, in order to create a different sensor **932** position. It has been found that the overall slope of the tubular body **921** and the Slope B (between the bottom end **924** and the Height H) have the greatest effect on slippage, and as these slopes approach zero, the reported incidence of slippage is reduced. In the embodiment shown in FIG. **96**, the Slope A and Slope B are equal to each other, and are also equal to the overall slope of the tubular body **921**. In other embodiments, Slope A and Slope B may be different from each other, and one or both of Slope A and Slope B may be different from the overall slope of the tubular body **921**. It is understood that any of these slopes may be an "average" slope, and that the tubular body **921** may have a curvilinear or other non-linear edge profile.

As stated above, the overall slope of the tubular body **921** may affect the fit and slippage probability of the band **920**. The overall (average) slope of the tubular body **921** may be calculated by drawing a straight virtual line between the intersection point of the Axis X and the top end **923** of the band **920** and the end point of the bottom end **924** of the band **920**, as shown in FIG. **96**A. A short-hand way to perform this calculation is to use the difference in circumference or diameter between any two points along the height of the tubular body **921** (e.g., between the top end **923** and the bottom end **924**) to determine the slope. This virtual line may be considered to be the combination of the lines Slope A and Slope B in FIG. **96**, although Slope A and Slope B may be different from each other in other embodiments. Slope A or Slope B may also affect the fit and slippage probability of the band **920**, and these slopes may be calculated as averages in the same manner described above with respect to the overall slope of the tubular body **921**. In one embodiment, the overall slope of the tubular body **921**, the Slope A, and/or the Slope B may be from 0-0.75, or about 0.65. In another embodiment, the overall slope of the tubular body **921**, the Slope A, and/or the Slope B may be from 0-0.5, or about 0.4. In a further embodiment, the overall slope of the tubular body **921**, the Slope A, and/or the Slope B may be from 0-0.3, or from 0-0.15. For smaller sizes of bands **920** (e.g., maximum diameter of 200 mm or below), the overall slope of the tubular body **921**, the Slope A, and/or the Slope B may be closer to zero than for larger sizes. It is understood that if the overall slope of the tubular body **921** is zero, the dimensions of the top and bottom ends **923**, **924** may be equal or approximately equal, such that the top end **923** is not wider than the bottom end **924**.

In another embodiment, a similarly structured band **920** may be configured to be worn elsewhere on the body. For example, the band **920** may be configured to be worn elsewhere on the arm, such as on the upper arm, the wrist, the hand, etc. As another example, the band **920** may be configured to be wrap around a different body part of the user, such as various locations on the leg, neck, torso, head, etc. It is understood that the dimensions and contours of the band **920** may be adjusted for wrapping around different body parts.

In one embodiment, the band **920** may be formed of a flexible, elastic material that can stretch to allow the user to comfortably wear the band **920** and to place the band **920** on and off of the user's body, e.g., an elastic fabric. The band **920** may be made from two or more layers of material that are joined together, and which may be part of a single piece folded over to create multiple layers. FIGS. **11-12** illustrate one embodiment of the band **920**, and FIGS. **14-17**, **39**A-B, and **68-70**C illustrate similar embodiments with some different features, as described herein.

In the embodiments shown in FIGS. **11-17** and **39**A-B, the band **920** is made from a piece of fabric that is folded over onto itself to form two layers and joined by adhesive applied between the two layers. The adhesive may be formed into a pattern in some embodiments, which may be visible in the finished product, creating a distinct visual appearance. The adhesive pattern may also be functional, such as in controlling the maximum degree of stretching of the band **920**, controlling the locations of stretching or other deformation of the band **920**, enhancing the durability of the band **920**, and/or other functions. As shown in FIGS. **12**, **14**, and **39**A-B, the adhesive is applied in a plurality of lines **925** extending in the axial direction (i.e., between the ends **923**, **924**) along the band **920** and spaced circumferentially from each other. In these configurations, radial stretching of the band **920** occurs between the lines **925**, and the adhesive lines **925** provide low-stretch areas. The bands **920** in FIGS. **12**, **14**, and **39**A-B have broken or discontinuous adhesive lines **925** (i.e., line segments), having one or more gaps **926** along each line **925**. Additionally, the gaps **926** of each line **925** in this embodiment are offset or staggered from the gaps **926** of the adjacent lines **925**. In another embodiment, the band **920** may have solid adhesive lines **925** (which may be straight and/or curved), such as in FIGS. **40**A-B, or one or more solid blocks of adhesive. The configurations of the adhesive lines **925** in FIGS. **12**, **14**, **39**A-B, and **40**A-B provides several advantages. First, the lines **925** extending axially allows most of the radial stretching of the band to occur between the lines **925**, so that the modulus or elastic response of the elastic material of the band **920** controls the amount of stretching. Additionally, the lines **925** extending axially permits the adhesive of the lines **925** to have a more significant influence on the modulus or elastic response of the band **920** in the axial direction, thus limiting the amount of axial stretching that occurs. This is beneficial to avoid excess stretching as the band **920** is pulled onto the user's body (e.g., forearm), so that the band **920** slides as desired, rather than wasting user-exerted energy by stretching the band. The "offset" of the gaps **926** also helps limit axial stretching. Further, the intermittent application of the adhesive lines **925** provides greater breathability, as the fabric of the band material is typically more breathable than the adhesive. In another embodiment, the band **920** is made from a piece of fabric that is folded over onto itself to form two layers and joined around the ends **923**, **924**, such as by adhesive, stitching, etc.

The band **920** is generally configured to hold an electronic module **930**, which may be removable from the band **920**. In one embodiment, the band **920** has a pocket **940** defining a cavity **941** configured to receive the module **930** in a removable configuration. In one embodiment, as illustrated in FIGS. **11-12**, the pocket **940** is accessible from an inner

surface **927** of the band **920** that is configured to confront and/or contact the user's body. FIGS. **36-38** illustrate components of the pocket **940** as well. In this configuration, the pocket **940** has an access opening **942** defined on the inner side **927** of the band **920**, and the module **930** can be inserted and removed through the opening **942**. The band **920** may be flipped inside-out in order to facilitate this access. The pocket **940** in each embodiment shown in FIGS. **11-17** and **36-39**A-B has an outer wall **943** that forms part of the outer surface **928** of the band **920** and an inner wall **944** that forms part of the inner surface **927** of the band **920**, with the cavity **941** defined between the walls **943**, **944**. These walls **943**, **944** are at least somewhat flexible in one embodiment, and may be made of a single layer and/or piece or multiple layers and/or pieces. In other embodiments, the walls **943**, **944** may be rigid, and may be made of the same material or a different material as other portions of the band **920**. The access opening **942** is defined within the inner wall **944** at one end of the cavity **941** in the embodiment of FIGS. **11-14** and **36-39**A-B, such that the module **930** is inserted by inserting one end of the module **930** (the USB connector **135** in one embodiment) into the opening **942** and then pushing the rest of the module **930** through the opening **942** and into the cavity **941**.

FIGS. **39**A-B illustrate embodiments of the band **920** with the module **930** inserted into the pocket **940**. In FIG. **39**A, the pocket **940** is configured for insertion of the module **930** with the light **934** and the button **933** positioned nearer the top end **923** of the band **920** (i.e., nearer the user's elbow) and the connector **935** positioned nearer the bottom end **924** of the band **920** (i.e., nearer the user's wrist). This is similar to the configuration of FIG. **14**. In FIG. **39**B, the pocket **940** is configured for insertion of the module **930** with the light **934** and the button **933** positioned nearer the bottom end **924** of the band **920** (i.e., nearer the user's wrist) and the connector **935** positioned nearer the top end **923** of the band **920** (i.e., nearer the user's elbow). This is similar to the configuration of FIGS. **11-12**. It is understood that the access opening **942** (not shown in FIGS. **39**A-B) may be located near the top end **923** in FIG. **39**A and near the bottom end **924** in FIG. **39**B. The configuration in FIG. **39**B may provide greater ergonomics and ease of use. For example, viewing the light **934** and pushing the button **933** may require less movement and more natural movement when these components are located nearer the wrist. Also, the force of pushing the button **933** compresses the user's arm, and if the button **933** is nearer the wrist where the bone is closer to the skin, there is less soft tissue that can compress under the force of the button pushing. In the configuration of FIG. **39**B, the protective shell **948** (described below) protects the connector **935**, as it is located in an area where users may grip to pull the band **920** on the arm.

FIGS. **13**A-B illustrate another configuration for inserting the module **930** into a pocket **940** with an access opening **942** on the inner surface **927** of the band **920**.

The pocket **940** may also include one or more sensor openings **945** configured to permit the sensor(s) **932** of the module **930** an unimpeded path to sense the user's body directly, such as by contacting the user's body (e.g., a heart rate sensor) or otherwise interacting directly with the user's body (e.g., an optical, heat, or other radiation-based sensor). In the embodiment illustrated in FIGS. **36-38**, the pocket **940** has a single sensor opening **945** on the inner wall **944** that is separate from the access opening **942**. In other embodiments, the sensor opening **945** may be contiguous with the access opening **942**, such that only a single opening is defined in the inner wall **944**, and/or the pocket **940** may have multiple sensor openings **945**. One example of this configuration is illustrated in FIGS. **68-70**C and **78-82**.

The outer wall **943** of the pocket is configured to cover the module **930**, and may be configured to permit reading and/or manipulation of the module through the outer wall **943**. For example, the outer wall **943** may include one or more windows **946** to permit viewing of a display of the module **930**. Such a window **946** may be an opening in the outer wall **943** or a transparent or translucent portion that allows viewing of a light or lighted display therethrough. In the embodiments shown in FIGS. **11-14** **39**A-B, and **68-70**C, the outer wall **943** has a window **946** to permit viewing of a single light, and may additionally or alternately have one or more windows **946** configured to permit viewing of a plurality of LEDs on the module **930** (i.e., a readable display). It is understood that the pocket **940** may have one or more windows **946** configured to be complementary with the structure of the module **930**.

As another example, the outer wall **943** may have one or more button portions **947** that are configured to allow manipulation of one or more buttons **933** of the module **930** through the outer wall **943**. It is understood that "buttons" may include mechanical/electrical buttons, a touch-screen interface, or other manually operable components. The button portion **947** may simply be a flexible portion of the outer wall **943** that permits the user to press the button portion **947** to activate the button **933** of the module **930**, as shown in FIGS. **11-14**. The outer wall **943** may further have one or more flex zones (not shown) to control flexing of the outer wall **943** and/or portions of the band **920**, such as a concave or indented portion having greater flexibility. In another embodiment, the button portion **947** may have a button mechanism (or mechanisms) that actuates the button (s) **933** of the module **930**. In a further embodiment, the button portion **947** may double as a window **946**, such as if the module **930** has a button with a light on it (see FIG. **42**) or if the module **930** has a lighted touch-screen display. The outer wall **943** may further have indicia **947**A, such as indications of the location(s) of the button(s) **933** on the module **930**, logos, instructions, etc.

The pocket **940** may further include a protective shell **948** within the cavity **941** to protect at least a portion of the module **930**. The shell **948** may be formed of a rigid material, such as a rigid plastic or fiber reinforced polymer (e.g., thermoplastic polyurethane), a metallic material, or other material. In the embodiment of FIGS. **11-14**, the walls **943**, **944** of the pocket **940** are flexible, and the shell **948** is received within the cavity **941** and positioned at the end opposite the access opening **942**. In this configuration, the shell **948** receives and protects the USB connector **935** of the module **930**. The shell **948** may further have structure to retain the module **930** once the module **930** is inserted, such as a friction fit configuration, complementary interlocking structure with the module **930**, etc. The shell **948** may also have structures that produce audible and/or tactile indications when the module **930** is fully inserted, in order to indicate to the user that the module **930** is fully inserted. These audible/tactile indications may be used with or without the locking structure, and may interact with the connector **935**. The shell **948** may be retained within the pocket **940** by adhesive or other bonding material, friction fit, various mechanical connection techniques, etc. In other embodiments, the shell **948** may cover a greater or smaller proportion of the module **930**, or the pocket **940** may have no shell at all. FIG. **16** also illustrates a protective shell **948** in one configuration.

In other embodiments, illustrated in FIGS. **15**A-**17**, the band **920** may have the access opening **942** on the exterior of the band **920**. For example, FIG. **15**A illustrates an embodiment where the access opening **942** is exposed on the outer surface **928** of the band **920**, and the module **930** can be inserted through the access opening **942** into the cavity **941**. The module **930** in this embodiment is inserted similarly to the technique described above, by inserting the end of the module **930** first through the opening **942**. As another example, FIG. **15**B illustrates an embodiment where the access opening **942** is much larger and is nearly the same size as the cavity **941**. In this embodiment, the entire module **930** is pushed downward into the cavity **941** through the opening **942**, and then a securing member **949** is used to secure the module **930** within the pocket **940**. The securing member **949** in this embodiment is a strap with a releasable connection, such as hook-and-loop material, a mechanical fastener (e.g., a snap or button), or other releasable connection. In other embodiments, the securing member **949** may have a different configuration, such as a cap, a flap, a tab, or other structure. FIG. **16** illustrates cross-sections of both of these embodiments. FIG. **17** illustrates an embodiment where the module **930** is inserted similarly to the embodiment of FIG. **15**A.

The band **920** may be assembled by using a heat press operation, with heat-activated films bonding the pieces of the band **920** together. FIGS. **18**-**38** illustrate one embodiment of a method of assembly/manufacturing of the band **920**. In this embodiment, a main body piece **950** is formed (e.g., cut) from an elastic fabric material, as shown in FIG. **18**, with fold lines indicated by broken lines. The main body piece **950** has a first hole **950**A for the opening **942**, a second hole **950**B for the sensor opening **945**, and a third hole **950**C forming part of a window **946**. The central fold line divides the main body piece **950** into an inner portion **950**D forming the inner surface **927** of the band **920** and an outer portion **950**E forming the outer surface **928** of the band **920**. FIG. **19** illustrates a main bonding panel **951** of heat-activated film or adhesive film (referred to as a "bonding material"), with the lines **925** and gaps **926** formed thereon by etching or cutting. FIGS. **40**A-B illustrate alternate embodiments of the main bonding panel **951** and the resultant band **920**. FIGS. **20**-**21** illustrate an outer pocket interior piece **952** with a light hole **952**A forming part of a window **946** and an interior pocket edge bonding piece **953** with a hole **953**A for the opening **942**, both of which are made from a bonding material. FIGS. **22**-**23** illustrate an inner pocket trim and outer pocket structure piece **954** and an inner pocket structure piece **955**, both of which are made from a fabric material with a bonding material backing. The inner pocket trim and outer pocket structure piece **954** has a light hole **954**A and a tongue **954**B that is cut out of the middle thereof. FIGS. **24**-**25** both illustrate alternate embodiments of the inner pocket trim and outer pocket structure piece **954**. FIG. **24** illustrates a piece **954** that has an adhesive or bonding material **954**C positioned on the tongue **954**B for bonding to the shell **948** within the pocket **940**. FIG. **25** illustrates a piece **954** that has a differently located light hole. The inner pocket structure piece **955** has a first hole **955**A for the opening **942** and a second hole **955**B for the sensor opening **945**. FIGS. **26**-**27** illustrate an outer pocket trim piece **956** and a pocket edge trim piece **957**, both of which are made from a fabric material with a bonding material backing. FIG. **28** illustrates a graphics piece **958**, which may include a logo **958**A or other indicia **958**B, as well as optionally a light hole which may form part of a window **946**. The graphics piece **958** may be made from a heat-activatable material. FIG. **29** illustrates a frame piece **959** that may be placed around the holes **950**B, **955**B for the sensor opening **945**, which may be made from a polycarbonate material. FIG. **30** illustrates the bonding material **954**C for the shell **948**, as also shown in FIG. **24**. It is understood that the various pieces of bonding material described herein, including pieces **951**, **952**, **953**, etc., may be made from the same or different bonding materials, and may have the same or different thicknesses and/or functional properties. It is also understood that the broken lines in FIGS. **20**-**25** indicate cut lines that are made after the pieces are placed in position on the band **920** during assembly.

Assembly of these components may be performed using a heat press, which seals the bonding material. The assembly starts with the main bonding panel **950**, as shown in FIG. **31**. In FIG. **32**, the outer pocket interior piece **952** is placed on the outer portion **950**E of the main body panel **950** and the inner pocket structure piece **955** is placed on the inner portion **950**D main body panel **950**, and a slight tackiness of the bonding material may retain these places in place. The frame piece **959** may additionally be placed around the opening **955**B in the inner pocket structure piece **955** to protect and reinforce the sensor opening **945** after assembly. In another embodiment, the frame piece **959** may be replace by an adhesive rimming. In FIG. **33**, the main bonding panel **951** is applied to the outer portion **950**E of the main body piece **950**, and may be retained by tackiness. As alternately shown in FIG. **35**, the main bonding panel **951** may be applied to the inner portion **950**D of the main body piece **950**. The main bonding panel **951** may be applied to the main body piece **950** and then removed to leave only the lines **925** of bonding material defined by the etching/cutting. As shown in FIG. **34**, the interior pocket edge bonding piece **953** is placed on the inner portion **950**D of the main body piece **950**, with the hole **953**A properly located where the display of the module **930** may be. A strip **960** of bonding material is then placed across the edge of the outer portion **950**E of the main body piece, which bonds the edges of the inner and outer sides **950**D-E together after folding. In FIG. **36**, the main body piece **950** is folded over so that the inner and outer portions **950**D-E confront each other and can be bonded together by the main bonding panel **951** and the strip **960**. FIG. **36** illustrates both the inner portion **950**D and the outer portion **950**E, now on opposite surfaces of the main body piece **950**. Outer portions of the main body piece **950** may be cut away and/or folded inwardly to make the final shape of the band **920** in this step, as well.

In FIG. **37**, the inner pocket trim and outer pocket structure piece **954** is placed on the inner portion **950**D, so that the piece **954** is on the outer surface and the tongue **954**B extends through the opening **942** and into the cavity **941**, between the inner and outer portions **950**D-E of the main body piece **950**. The outer pocket trim piece **956** is placed on the outer portion **950**E, as also shown in FIG. **37**. The pocket edge trim piece **957** is placed along an edge of the access opening **942**, as further shown in FIG. **37**, such that the piece **957** folds over the edge. After this point in assembly, the pieces are heat-pressed by using a specially-designed mold. One embodiment of the mold **970** includes a first mold plate or piece **971** in contact with the inner portion **950**D and a second mold plate or piece **972** in contact with the outer portion **950**E, where the plates **971**, **972** are pressed together to heat-press the assembly and mold the pocket **940**, as described in greater detail below and shown in FIGS. **64**-**67**. A plug is inserted through the opening **942** during the heat pressing, to form the inner shape of the pocket **940**. During the heat pressing, the

bonding materials are heat-activated to bond the adjacent surfaces together, and may add some local rigidity to the structure as well. This local rigidity is particularly advantageous for retaining the shape of the pocket **940** and for limiting axial stretching as described elsewhere herein. In this configuration, the assembled pieces **950**, **952**, **953**, **954**, **955**, **956**, **957** define the pocket **940**, the cavity **941**, the access opening **942**, and the sensor opening **945**. The inner portion **950**D of the main body piece **950** combines with other pieces (e.g., the inner pocket structure piece **955**) to define the inner wall **944**, and the outer portion **950**E combines with other pieces (e.g., the outer pocket interior piece **952** and the tongue **954**B) to define the outer wall **943**.

FIGS. **64-67** illustrate an example embodiment of a mold **970** that can be used to manufacture the band **920** using the components and techniques described herein and illustrated in FIGS. **18-40**B. The mold **970** includes two mold plates **971**, **972** that are pressed together around the assembled inner and outer portions **950**D-E as shown in FIG. **37**, such that these components are received in a mold cavity **973** between the mold plates **971**, **972** in an assembled manner. In the configuration shown in FIGS. **64-67**, the first plate **971** contacts the inner portion **950**D and the second plate **972** contacts the outer portion **950**E. The mold plates **971**, **972** each have an enlarged portion **974** that creates a secondary cavity **975** within the mold cavity **973**, for molding the pocket **940**. One or both plates **971**, **972** may include one or more holes **978** to permit gases to escape during molding. A plug **976** is inserted between the inner and outer portions **950**D-E during the heat pressing, to form the inner shape of the pocket **940**, as shown in FIGS. **65-67**. As illustrated in FIGS. **65** and **67**, the plug **976** includes a projection **977** that extends through the sensor opening **945** during the molding process. After the heat pressing is completed, the mold plates **971**, **972** are separated, the plug **976** is removed from the pocket **940** (such as through the opening **942**), and the assembled band **920** is removed from the mold **970**. Additional manufacturing steps may then be taken, as shown in FIG. **38**. It is understood that the structure and configuration of the mold **970** and the components thereof may be changed for bands **920** having different sizes, shapes, structures, etc.

After the complete, the assembly is removed from the mold, and the final structure of the band **920** is assembled as a flat piece, as shown in FIG. **38**. The protective shell **948** may be placed in position in the cavity **941** after the heat pressing is complete, and may be connected by the adhesive or bonding material **954**C in one embodiment. The graphics piece **958** may be connected to the outer surface **928** of the band **920**, such as by heat pressing, heat sealing, adhesive or other bonding material, etc. Additionally, a seam bonding strip **961** is placed along the edge where the folded ends of the inner and outer portions **950**D-E meet, in order to cover the edges. A band closure trim strip **962** is used to bond the ends of the main body piece **950** together to form the tubular body **921**. It is understood that the sides of the main body portion **950** may be cut or trimmed to shape, such as an angular shape to create a "slope" of the band **920**, before connection to form the tubular body **921**. These strips **961**, **962** may be connected by heat pressing, heat sealing, adhesive or other bonding material, knitting/stitching, or other technique. This forms the final structure of the band **920** with the pocket **940** defined on the inner surface **927**. The strips **961**, **962** may further form effective locations for gripping the band **920** to pull the band **920** onto the user's arm, and in particular, the closure trim strip **962** may provide an effective area, due to it having lower stretching capability than the other locations of the band **920**. FIG. **39**A illustrates the band **920** constructed as shown in FIGS. **18-38** with the module **940** received in the pocket **940**, and FIG. **39**B illustrates a similar band **920**, as described elsewhere herein. It is understood that similar processes and components may be used to form a band **920** with a different configuration, such as an opening **942** on the outer surface **928**, a pocket **940** in a different location or orientation, a differently configured band **920** for use on a different body part, etc. It is also understood that the components described as being connected together herein may be connected by other techniques in other embodiments, such as other types of adhesives/bonding materials, mechanical fasteners, knitting/stitching/sewing, etc.

FIGS. **68-70**C illustrate another embodiment of a band **920** that, in certain embodiments may include one or more components in common with the bands **920** described elsewhere herein and shown, e.g., in FIGS. **11-17** and **39**A-B. By way of illustrating certain embodiments, reference numbers used in FIGS. **68-93** are consistent with the reference numbers used in connection with FIGS. **1-67**, unless otherwise noted below, and not all reference numbers may be described again with respect to FIGS. **68-93** for the sake of brevity. FIG. **68** illustrates the outer side **928** of the band **920**, and FIG. **69** illustrates the inner side **927** of the band **920**. For example, the band **920** has a pocket **940** configured for insertion of the module **930** with the display **934** and the button **933** positioned nearer the bottom end **924** of the band **920** (i.e., nearer the user's wrist) and the connector **935** positioned nearer the top end **923** of the band **920** (i.e., nearer the user's elbow), similar to the configuration of FIG. **39**B. In another embodiment, the pocket **940** may be arranged differently, such as an arrangement similar to the configuration of FIG. **39**A. The module **930** is not shown in FIGS. **68-70**C. The outer wall **943** of the pocket has a button portion **947** configured to interact with the button **933** on the module **930** and a window **946** configured to permit viewing of the light **934** through the outer wall **943**. The pocket **940** has an opening **942** on the inner wall **944** that extends into the cavity **941** and is configured to act as both a sensor opening and access opening. In other words, the opening **942** is large enough to permit insertion of the module **930** into the cavity **941** through the opening **942**, and a portion of the opening **942** permits the projection **939** of the module **930** to extend through to permit the sensor(s) **932** to be in close proximity to the user's body.

The band **920** in FIGS. **68-70**C utilizes a housing **963** that is formed separately from the band **920** and is connected to the band **920** to form the pocket **940**. One embodiment of the housing **963** is shown in FIGS. **74-75** and **78-82**. The housing **963** may be made of a thermoplastic polyurethane (TPU) material and is formed in a single piece (e.g., by injection molding) in one embodiment, but may be partially or completely made from other materials, multiple pieces, and/or other techniques in other embodiments. The housing **963** in this embodiment is a moderately rigid shell that completely defines the cavity **941** and defines the opening **942** on the inner wall **944** and the window **946** on the outer wall **943**. In one embodiment, the rigidity of the housing **963** may be sufficiently rigid to protect the module **930**, and sufficiently flexible to permit manipulation of the button **933** by pressing on the button portion **947** of the band **920**. The rigidity of the housing **963** may be greater than the rigidity of the fabric material forming the band **920**. The housing **963** may also have a protrusion **987** on the outer wall **943** in one embodiment, to facilitate manipulation of the button **933** by the button portion **947** on the outer surface **928** of the band **920** and/or to enhance the "feel" of the button **933**, as shown

in FIG. **79**. The protrusion **987** may lightly engage the button **933** or be in close proximity to the button **933**, so that manipulation of the button **933** requires a small amount of movement/flexing of the adjacent portions of the housing **963**. The embodiment of FIG. **79** has the protrusion **987** formed as a dome-shaped protrusion formed of an epoxy material applied to the inner surface of the outer wall **943**. In other embodiments, the protrusion may be formed differently, such as being integrally formed (e.g., molded) with the housing **963**, or may be structured or located differently. As shown in FIGS. **78-82**, the housing **963** in the illustrated embodiment has a lip **964** that extends inwardly around the opening **942** and functions to retain the module **930** within the pocket **940**. The opening **942** has a narrowed portion **965** that is configured to engage with the projection **939** of the module **930** to hold the projection **939** in place, and the lip **964** has recessed portions **966** located around the narrowed portion **965**, as shown in FIGS. **78**, **80**, and **82**. The recessed portions **966** permit the projection **939** to extend farther outwardly relative to the lip **964**, in order to have better access to the user's skin. The housing **963** also has a wall **969** configured to form a pocket enclosing and holding the connector(s) **935** of the module **930**.

In one embodiment, the housing **963** further has a flange **967** that extends outwardly around at least a portion of the periphery of the housing **963** and is configured for connection to the band **920**. In the embodiment shown in FIGS. **74-75** and **78-82**, the flange **967** extends generally in a single plane around the entire periphery of the housing **963**. In other embodiments, the flange **967** may have a different configuration (e.g., intermittent), or may not be present. Generally, the exterior surfaces of the housing **963** shown in FIGS. **74-75** and **78-82** are smoothly contoured, both for aesthetics and for increased comfort when the housing **963** engages the user's body.

The window **946** of the housing **963** may be an empty passage in one embodiment, or may have a transparent filler in another embodiment, in order to resist ingress of material from the outer surface **928** of the band **920**. In further embodiments, the window **946** may include a light-scattering and/or light-collecting structure, to enhance transmission of the light through the window **946**, making light from the display **934** appear brighter at the outer surface **928** of the band **920** from a wide variety of angles. For example, the window **946** may include a clear silicon print aligned with the window **946** in one embodiment. As another example, the window **946** may have a silkscreen fabric or fine weave of material aligned with the window **946** in another embodiment. As a further example, the window **946** may have a film connected over the window **946** in yet another embodiment, such as a polycarbonate film that is connected by adhesive or sonic welding. It is understood that these structures may be located within the window **946** and/or positioned over the inner and/or outer surfaces of the window **946**, in various embodiments. This may be particularly advantageous when used with a housing **963** as shown in FIGS. **78-82**, which may have a significant wall thickness between the display **934**, which may make the light darker or more difficult to detect from peripheral angles.

FIGS. **71-91** illustrate one embodiment of a set of components and a method for manufacturing the band **920** as shown in FIGS. **68-70**C, which may be made from a piece of fabric that is folded over onto itself to form two layers and joined by stitching and/or adhesive applied between the two layers. It is understood that the band **920** may be made from two or more separate pieces joined together in another embodiment. The band **920** may use a heat press operation in assembly, with heat-activated films bonding the pieces of the band **920** together. The embodiment of the method shown in FIGS. **83-91** utilizes more localized heat pressing, and does not involve heat pressing the entire band **920** as in the method of FIGS. **18-38** and **64-67**. FIGS. **71-82** illustrate components that may be used in the method illustrated in FIGS. **83-91**, which are described in greater detail below with respect to FIGS. **83-91**.

In the embodiment of FIGS. **71-91**, a main body piece **950** is formed (e.g., cut) from an fabric material with elastic properties (e.g., a polyethylene-based material), as shown in FIG. **83**, with fold lines indicated by broken lines. Graphics **958** may be applied to the outer surface **928** of the band **920**, such as by screen printing as shown in FIG. **84**, if desired. The main body piece **950** has a first hole **950**A for the housing **963** to extend through the band **920** and be accessible from the inner surface **927** of the band **920** and a second hole **950**B aligned with and/or forming part of the window **946**. The holes **950**A-B may be formed in the main body piece **950** by cutting or laser etching in one embodiment, as shown in FIG. **85**, and may be formed before or after application of the graphics (if graphics are applied). The central fold line divides the main body piece **950** into a first or inner portion **950**D forming the inner surface **927** of the band **920** and a second or outer portion **950**E forming the outer surface **928** of the band **920**, and the main body piece **950** has an inside surface **950**F and an outside surface **950**G (illustrated by shading in FIGS. **83-91**. The outside surface **950**G forms the inner and outer surfaces **927**, **928** of the band **920** after assembly, and the inside surface **950**F is folded over on itself during manufacturing and forms no portion of the inner and outer surfaces **927**, **928** of the band **920**. It is understood that graphics **958** that are configured to be visible on the inner or outer surface **927**, **928** of the band **920** may be applied to the outside surface **950**G of the main body piece **950**.

As shown in FIG. **86**, an frame bond **980** is applied around the first hole **950**A on the inside surface **950**F of the first portion **950**D and is configured for bonding to the flange **967** of the housing **963**, and a light alignment bond **981** is applied around the second hole **950**B on the inside surface **950**F of the second portion **950**E and is configured for bonding to the housing **963** around the window **946**. In this configuration, the light alignment bond **981** resists displacement of the hole **950**B with respect to the window **946**, which may cover the window **946** and block light passage. Although the light alignment bond **981** is shown as being applied in FIG. **86**, in one embodiment, the light alignment bond **981** may be applied at the stage illustrated in FIG. **89**, immediately before folding the inner and outer portions **950**D-E together. These bonds **980**, **981** may initially be lightly bonded by slight application of heat and pressure in one embodiment, to hold the components in place during assembly, and then may be normally bonded later during assembly. A strip **960** of bonding material is also placed across the edge of the inside surface **950**F of the outer portion **950**E of the main body piece **950**, configured to bond the edges of the inner and outer sides **950**D-E together after folding, as shown in FIG. **86**. Another bonding strip **968** may also be placed on the inside surface **950**F along the central fold line, in order to provide additional strength and structural support to the bottom end **924** of the finished band **920**, as also shown in FIG. **86**.

The housing **963** may then be connected to the band **920**, such that the flange **967** sits around the periphery of the hole **950**A and the portion of the housing **963** including the opening **942** projects through the hole **950**A, as shown in

FIG. **87**. The flange **967** may be connected to the inside surface **950**F of the main body piece **950** by stitching around part or all of the flange **967** and/or bonding to the frame bond **980** in one embodiment. As described above, in one embodiment, the flange **967** may be lightly bonded to the inside surface **950**F by the frame bond **980** prior to stitching, and then more strongly bonded later on during assembly. After the housing **963** is connected to the band **920**, a trim piece **983** may be connected on the outside surface **950**G of the inner portion **950**D of the main body portion **950**, as shown in FIG. **88**. This trim piece **983** forms part of the inner surface **927** of the band **920** and covers the connection between the housing **963** and the main body portion **950**. The trim piece **983** may be formed of a heat-activated material as described herein and may be heat pressed into place in one embodiment, and the trim piece **983** may be lightly pressed at first and then more strongly pressed at a later time, or may be fully pressed initially, in various embodiments.

In one embodiment, a support piece **982** as shown in FIG. **73** may also be positioned between the housing **963** and the inside surface **950**F of the outer portion **950**E of the main body piece **950** prior to folding of the main body piece **950**. The method illustrated in FIGS. **83-91** does not include this support piece **982**, and the support piece **982** (if used) may be connected to the housing **963** and the main body piece **950** between the steps in FIGS. **88** and **89** in one embodiment. The support piece **982** may be formed of a heat-activated material as described herein and may be heat pressed into place. The support piece **982** may have a hole (not shown) cut in alignment with the window **946**. This support piece **982** may be included if graphics are printed on or around the areas of the band **920** located over the pocket **940** and housing **963**, e.g., as in FIGS. **40**A-B, to resist stretching or distortion of the graphics. If no graphics are printed in this location, the support piece **982** may not be included.

FIGS. **97-99** illustrate an embodiment of a housing **963** that is usable in manufacturing a band **920** according to various embodiments described herein. FIGS. **100-101** illustrate another embodiment of a housing **963** that is configured in a similar manner to the housing **963** in FIGS. **97-99**, and the descriptions herein with respect to FIGS. **97-99** apply equally to FIGS. **100-101** unless stated otherwise. The housing **963** in FIGS. **97-99** includes one or more slots **992** extending through one or more of the walls **993** of the housing **963**. It is understood that the walls **993** of the housing **963** define the cavity **941** and may include the outer wall **943**, the inner wall **944**, and potentially other walls as well.

The slots **992** may help avoid accumulation of moisture (e.g., sweat) within the housing **963** during use, by allowing the moisture to escape easily from the housing **963**. In one embodiment, the housing **963** may include at least one slot **992** that is located at the end of the housing **963** positioned closest to the bottom end **924** of the band **920**, i.e., the end of the housing **963** that is configured to be at the bottom when the band **920** is worn on a user's arm in a normal standing position. The housing **963** in FIGS. **97-99** has a slot **992** on the bottom end of the outer wall **943** in this position, when the housing **963** is mounted on the band **920** in the orientation shown in FIGS. **69-70**A, **91**, and **96**. In this position, the downward-facing slot **992** promotes increased moisture passage, because gravity tends to force moisture toward the slot **992**. Centrifugal force generated by swinging the arm during exercise may also force moisture toward the downward-facing slot **992**. The housing **963** may also have one or more additional slots **992** in other locations in various embodiments. For example, the housing **963** may also have slots **992** in one or both of the left and right sides of the inner wall **944**, as in the embodiment of FIGS. **97-99**. These side slots **992** may also promote increased moisture passage through gravity and/or centrifugal force, as one of these slots **992** will be downward-facing when the user's arm is bent at a 90° angle, as is common during running and many other exercises.

The housing **992** may have additional slots **992** and/or slots **992** located in different positions in other embodiments, which may or may not be positioned in locations where gravity and/or centrifugal force promote flow of moisture. For example, if the housing **963** is positioned in a different orientation in another embodiment, e.g., oriented similarly to the embodiment in FIG. **39**A, then the end of the housing **963** that is downward-facing may be different. In such an embodiment, the slot(s) **992** may be located differently, in order to promote increased moisture passage, e.g., by having a slot **992** at the opposite end of the housing **963** as the end slot **992** in FIGS. **97-99**. In a further embodiment, the housing **963** may have slots **992** located at the bottom-left and bottom-right corners. Still further configurations may be used in other embodiments.

The slots **992** in the embodiment of FIGS. **97-99** are formed in the outer wall **943** of the housing **963**. These slots **992** may be considered to be formed at least partially or entirely in side walls **993**A of the housing **963** that form part of the outer wall **943** and extend transversely to the flange **967**. In this position, the slots **992** are positioned only on the portions of the housing **963** that are located outwardly (toward the outer side **928** of the band **920**) from the flange **967**. This configuration permits moisture to pass from inside the housing **963** to the exterior of the housing and to be absorbed by the material of the band **920**. In other embodiments, the slots **992** may additionally or alternately be located elsewhere. For example, the housing **963** may include one or more slots **992** in the inner wall **944** that allow moisture to pass to the exterior the band **920**, or the housing **963** may have other exposed surfaces (such as in a differently-configured band **920**) that may have slots **992** therein. Additionally, the size(s) of the slot(s) **992** may affect the moisture passage properties, as larger slots **992** can assist in breaking any meniscus that may form from moisture accumulation. In one embodiment, the slot **992** at the end of the housing **963** may be at least 50% of the width of the wall **993** in which it is located (i.e., not including the flange **967**), and the slot(s) **992** on the side walls **993** of the housing **963** may each be at least 20% of the length of the side wall **993** in which it is located. Further, the housing **963** may have a surfactant applied to the inner surfaces of the housing **963**, in order to enhance the ability of moisture to travel toward the holes and break up any meniscus that may form. The use of a surfactant may enable the use of smaller slots **992**.

The slots **992** may be formed using any of a number of different forming techniques, in various embodiments. For example, in one embodiment, the slot(s) **992** may be formed in the housing **963** after the housing is formed, such as by using laser cutting, mechanical cutting, thermal cutting, or other cutting techniques; machining techniques; or other material removal techniques. In another embodiment, the slot(s) **992** may be formed as part of the forming process, such as by pressing or molding the material of the housing **963** with a tool configured to form the slot(s) **992**. For example, a single-piece, injection molded TPU housing **963**

as described above may be injection molded into a cavity that forms the slot(s) **992**. Other techniques known in the art may be used as well.

FIGS. **94-95** illustrate one embodiment of a heat press assembly **988** configured for heat pressing around the flange **967** of the housing **963** after the housing **963** is connected to the band **920**, e.g., by stitching, as described herein with respect to FIG. **87**. The heat press assembly **988** as shown in FIGS. **94-95** includes two opposed mold pieces **989**, **990** that are configured for heat pressing around the flange **967** of the housing **963**. The band **920** is illustrated schematically in FIG. **95**, to show that the heat press assembly **988** is configured for heat pressing the band **920** along with the housing **963**. In operation, the first mold piece **989** is positioned on the inside surface **950**F of the inner portion **950**D of the main body piece **950**, and the second mold piece **989** is positioned on the outside surface **950**G of the inner portion **950**D of the main body piece **950**. The mold pieces **989**, **990** are annular in shape, each having an internal opening **991**, so that the mold pieces **989**, **990** are configured to press only around the flange **967** of the housing **963**. In this configuration, the main body of the housing **963** is received within the opening **991**, so that the mold pieces **989**, **990** do not press the main body of the housing **963** or the adjacent portions of the band **920**, which localizes the heat application and avoids creating unwanted marks or discolorations on the non-pressed portions of the band **920** and housing **963**. The trim piece **983** shown in FIG. **88** may be applied prior to operation of the heat press assembly **988** in one embodiment, and the shapes of the mold pieces **988**, **989** conform to the shape of the trim piece **983** as shown. The heat press assembly **988** may be applied to the band **920** and housing **963** following the assembly steps shown in FIGS. **87** and **88**, and before the band **920** is folded over in FIG. **89** (discussed below). Additional pieces of heat-sealable material may be used in various positions, in connection with the heat press assembly **988**. For example, the support piece **982** in FIG. **73** may also be applied before operation of the heat press assembly **988**, as discussed herein. It is understood that the configuration of the mold pieces **988**, **989** may vary depending on the shapes and configurations of the housing **963** and the trim piece **983** (or other pieces of heat sealable material that may be used).

The main body piece **950** is then folded over so that the inner and outer portions **950**D-E confront each other, as shown in FIG. **89**. The outside surface **950**G of the inner and outer portions **950**D-E forms the inner and outer surfaces **927**, **928** of the band **920**, respectively, and the inside surface **950**F is located internally within the band **920** in this configuration. A seam bonding strip **961** is placed along the edge where the folded ends of the inner and outer portions **950**D-E meet, in order to cover the edges, as shown in FIG. **90**. In one embodiment, the strips **960**, **961**, **968**, frame bond **980**, the trim piece **983**, the light alignment bond **981**, and optionally the support piece **982** (if present) may be bonded completely at this point in the process, such as by localized bonding techniques. For example, the bonding may be accomplished by bonding each piece individually and sequentially, or by a heat press with tool surfaces configured to press the desired pieces at the desired locations and not to press other locations of the band **920**. The main body portion **950** may be cut to size at this point in the process, such as by cutting the ends **950** of the main body piece **950** to form angled edges, as seen in FIG. **91**. A band closure trim strip **962** may be used to bond the ends of the main body piece **950** together to form the tubular body **921**, as shown in FIG. **91**. In one embodiment, the ends of the main body piece **950** are first wrapped to form the tubular body **921** and then stitched together along the seam, then the band closure trim strip **962** is applied to cover the stitching and secure the connection. The band closure trim strip **962** wraps around both the inner and outer surfaces **927**, **928** of the band **920** when assembled, and one embodiment of the band closure strip can be seen in greater detail in FIG. **70**C. In one embodiment, the closure trim strip **962** is locally heat pressed subsequent to the additional heat pressing operation described above. After stitching and connection of the trim strip **962**, the final structure of the band **920** is formed, with the pocket **940** defined on the inner surface **927**.

The band **920** may further be provided with an adjustment mechanism in one embodiment, to make the size (i.e., circumference) of the tubular body **921** adjustable. Examples of such adjustment mechanisms may include an adjustable fastening structure such that the band **920** can be wrapped around a portion of the user's body and fastened to form the tubular shape, or a foldable tab or flap that may be fastened in different positions to tighten or loosen the band **920**. Fastening structures that may be used for such an adjustment mechanism include hook and loop (i.e., Velcro), snaps, clips, buckles, ties, etc. Other examples of such adjustment mechanisms include tightening strips or straps or a drawstring, which may be fastened as described above. Further examples of adjustment mechanisms may be used in other embodiments. FIGS. **92-93** illustrate example embodiments of structures that may be used for such adjustment mechanisms. For example, FIG. **92** illustrates a band **920** with an elastic tab **984** that is fixed proximate the edge of the band **920** at one end and has a releasable connector **985** (Velcro in this embodiment) at the opposite end. The elastic tab **984** can be stretched and reconnected to increase compression locally, thereby making the band **920** fit tighter on the user's body. The tab **984** is connected at the top end **923** of the band **920** in this embodiment, but could be located elsewhere in other embodiments. As another example, FIG. **93** illustrates a band **920** with an elastic cord or drawstring **986** that extends along most of the length of the band **920**, with one end fixed near one edge of the band **920** and the other end having a releasable connector **985** (Velcro in this embodiment) near the opposite edge of the band **920**. The cord **986** is connected at the top end **923** of the band **920** in this embodiment, but could be located elsewhere in other embodiments. The cord **986** can be stretched and reconnected to increase compression along almost the entire length of the top end **923** of the band **920**. Further different embodiments of adjustment mechanisms may be used in other embodiments.

FIG. **41** shows perspective side views of a module **930** that may be used in association with apparel or other devices, such as being insertable within an armband that may be used during intense physical activity. Module **930** may include one or more mechanical, electric, and/or electro-mechanical components, such as computer components, that are described elsewhere herein, as well as a casing **931** forming a structural configuration for the module **930**. Module **930** may comprise at least one of a processor, a non-transitory computer-readable medium, sensor and/or a transceiver. One or more components may be similar to and/or identical to any component shown and described above in FIGS. **1-5**. Those skilled in the art will appreciate that module **930** and the casing **931** may have multiple different structural configurations and the illustrations are merely exemplary.

In the embodiment of FIG. **41**, the module **930** has at least one sensor **932**, which may be in the form of, for example,

a heart rate sensor or other sensor for sensing another physiological parameter of the user. Module **930** may be configured to contact the skin of the user during wear while the module **930** is secured within the band or apparatus. For example, the heart rate sensor **932** in this illustrated embodiment is an optical sensor that works best in contact or close proximity with the skin. As shown in FIG. **41**, the casing **931** of module **930** has a projection **939** on the underside **936**, and the sensor **932** is mounted on the end of the projection **939**. The projection **939** extends the sensor **932** farther away from the surrounding surfaces of the casing **931**, permitting greater capability for forming continuous contact with the user's body. Band **920** may have an aperture that allows a front surface of the protrusion to contact the user's skin, however, the remainder of underside **938** is held within the band **920** or at least is separated from the user's skin by at least one layer of a material. In one embodiment, the layer of material may be configured to wick away moisture (e.g., such as sweat) away from the sensing surface on the user's skin. In other embodiments, it may be configured to prevent moisture, light, and/or physical materials from contacting the sensing surface or location during the physical activity. In one embodiment, it may selectively block light of certain wavelengths. In certain embodiments, at least 95% of ambient light is blocked within the immediate vicinity of the sensing surface. In another embodiment, at least 99% of the ambient light is blocked. This may be advantageous for optical sensors, such as optical heart rate sensors. Those skilled in the art will appreciate that other sensors, including those sensors described above in relation to FIGS. **1-5**, may be used—either alone in combination with each other or other sensors—without departing from the scope of this disclosure.

In one general embodiment, the module **930** may include one or more user input interfaces, such as for example, buttons **933** to provide user-actuated input. An example user input interface may consist of single mechanical button, e.g., button **933**, which is shown on the top side **937** opposite the underside **936**. Yet in other embodiments, display feature **934** may be configured as a user-input interface. Those skilled in the art will appreciate that one or more user-actuated inputs may also be received through one or more transceivers of the module **930**. For example, a system may be configured such that a user may be able to enter a user input onto an electronic mobile device which may mimic using buttons **933** or, alternatively, perform different functions than available in a specific instance of actuating buttons **933**. Module **933** may further comprise one or more display features **934**.

In one embodiment, the pocket **940** of the band or apparatus may be configured to receive module **930** having a display feature **934** on surface that provides at least one visual indicia to a user. Display features **934** may be a simple light source, such as a light emitting diode. In a specific embodiment, the color, intensity, or pattern of illumination of at least one light source in display features may be used to provide a visual indication to the user. Those skilled in the art will further appreciate that more complex display devices, such as LED, OLED, LCD, etc. may be utilized. Other output mechanisms, such as audible and tactile are within the scope of this disclosure.

Module **930** may further include one or more connectors **935** for charging and/or connection to an external device. In one embodiment, connectors **935** may include a serial bus connection, such as that may comply with one or more Universal Serial Bus (USB) standards. In one embodiment, connectors **935** may be configured to provide at least of the same electronic information to an external device that may be transmitted via one or more transceivers of the module **930**.

When the module **930** in the embodiment of FIG. **41** is received within the pocket **940** illustrated in FIGS. **11-12** and **36-39**B, connector **935** is received within the shell **948**, the underside **936** of the casing **931** is positioned in contact with the inner wall **944** of the pocket **940**, and the top side **937** of the casing **931** is positioned in contact with the outer wall **943** of the pocket **940**. In this arrangement, the projection **939** extends through the sensor opening **945** to place the sensor **932** in closer proximity with the user's body, the button **933** is positioned adjacent the button portion **947** on the outer wall **943**, and the light **934** is positioned in alignment with the window **946** to permit viewing of the light **934** through the outer wall **943**. The projection **939** extending through the sensor opening **945** and also in certain embodiments may assist in holding the module **930** in place. In this configuration the end of the module **930** opposite the connector **935** protrudes slightly from the access opening **942**, in order to facilitate gripping for removal of the module **930**.

The casing **931** may have a structural configuration to increase comfort of wearing the module **930** in close proximity to the user's skin. For example, the casing **931** has a flat configuration to create a thin profile, making the module **930** less noticeable when being worn on the user's body. As another example, the casing **931** may have curved contours on the underside **936** and the top side **937**, as well as curved or beveled edges, in order to enhance comfort.

FIGS. **42-59** illustrate several additional embodiments of various modules **930** with casings **931** that are differently configured. For example, FIG. **42** illustrates a module **930** with a flat-ended casing **931** and a button **933** that has a display feature (e.g., light source) **934** thereon. FIG. **43** illustrate a module **930** with a light **934** near the end opposite the connector **935**, a single button **933**, and no projection at the sensor **932**. FIG. **44** illustrates a module **930** similar to that of FIG. **43**, except with a light **934** surrounding the button **933**. FIG. **45** illustrates a module **930** with a lighted button **933**, **934** located on the end opposite the connector **935**, rather than on the top side **937**. FIGS. **46-59** illustrate various different embodiments having examples of projections **939** that are shaped, sized, and configured in many different ways. FIG. **57** illustrates a module **930** where the button **933** is recessed from the top side **937**. Still further examples of modules with different configurations and arrangements of features are contemplated.

FIGS. **60-63** illustrate an additional embodiment of a module **930** with a casing **931** that has a projection **939** on the underside **936**, with a sensor (e.g., a heart rate sensor) mounted on the end of the projection **939**, similar to the embodiment of FIG. **41**. The module **930** includes one or more user input interfaces, such as a button **933** on the top side **937**, as seen in FIG. **60**. The casing **931** of the module **930** in the embodiment of FIGS. **60-63** has curved or beveled edges, in order to enhance comfort. In another embodiment, as shown in FIG. **63**, the module **930** may also include a retaining structure **935**A on the underside of the USB connector **935**. This retaining structure **935**A may assist in retaining the connector **935** within the pocket **948**, e.g., by engaging the shell **948**. It is understood that this module **930** may be utilized as described herein, and may have additional or alternate features as described herein. The housing **963** of the band **920** as illustrated in FIGS. **68-70** and **78-82** is configured to fit the module **930** illustrated in FIGS. **60-63**.

In certain embodiments, computer-executable instructions may be used to calibrate a device or system, such as to account for the location, orientation, or configuration of a sensor or group of sensors. As one example, module **930** may include a heart rate sensor. The heart rate sensor may be configured such that when correctly orientated on or in the band, the heart rate sensor is located or oriented a certain way with respect to the user. For example, if the heart rate sensor is an optical heart rate sensor, it may be within a distance range to the skin (with respect to multiple axes and location). Further, one or more sensors may be configured such that when correctly oriented within the band (e.g., placed within the pocket, a contact of a sensor is configured to be in communication with the user (e.g., their skin or alternatively their clothing). Too much variance with respect to the orientation or location of the sensor may result in inaccurate and/or imprecise data. In certain embodiments, one or more sensor measurements, either raw or calculated, may be utilized to determine a proper or preferred orientation(s) or location(s) of the sensor(s).

The measurements may be based on one or more remote or local sensors on the device to be oriented, such as module **930**. For example, in certain embodiments, a user's Body Mass Index (BMI) or another parameter may be calculated. The calculation may be based, at least in part, on one or more sensors located on the device to be oriented. Based upon the sensor measurement(s), a UI, which may be on the device itself, a remote device, and/or a device in electronic communication with the device to be oriented (or re-oriented) may prompt and/or guide a user to re-orient the device. In other embodiments, it may provide a user input device to provide user inputs for orientation. For example, unlike prior art devices which may merely detect a weak or imprecise value and recommend or request the orientation of the sensor or device, embodiments disclosed herein may use data to intelligently determine the problem and/or solution. In one embodiment, a user's BMI or other data may be used to determine that the user should wear the device at another location and/or alter its orientation. For example, if a user's BMI is within the normal range (e.g., commonly accepted as 20-25), however, heart rate data is utilized in the calculation of a parameter that is below a threshold, then in certain embodiments, additional analysis may be performed to consider whether the heart rate sensor should be adjusted. As explained in more detail below, further embodiments relate to augmenting one or more calculations of parameters used in the calculations.

Systems and methods may be implemented to reduce inaccuracies and/or imprecise data collection. In one embodiment, the band may be configured to be worn within a range of locations, such as on a user's appendage or extremity. With respect to a "lower arm" usage example, the lower arm may be considered the distance between an elbow joint and the carpus of an arm or appendage, and may further be logically divided into a proximate region and a distal region. For example, the proximate region of the lower arm would include a portion (e.g., up to half) of the lower arm closest to the user's shoulder; and likewise, a distal region would include a portion (e.g., up to the remaining half) of the lower arm connecting to the carpus. In this regard, the band **920** may be configured to be worn in the proximate region of the lower arm. In one embodiment, the entire band is configured to be retained within a proximate half of the lower arm. In one embodiment, the band is configured to be retained at a specific location during athletic activities, such as with respect to the distance of the lower (or upper arm), a sensor measurement location is configured to move less than 1% or 0.5% of the distance along the lower arm. In yet other embodiments, the band may be configured to move within a specific distance with respect to the distance along the lower arm, however, at least one sensor (such as a sensor of the module **930**) may be configured to move a smaller distance. For example, in one embodiment, the band **920** may be configured to permit movement of about 1 mm along the length of the lower arm, however, the module, or a sensing surface of the module, may be configured to only permit 0.55 mm movement along the same axis. As discussed above, one or more measurements may dictate altering this range, the distance from the sensor to the skin, as well as other locational dimensions and/or orientations. In one embodiment, the band **920** is configured to retain a sensing surface (or sensing location) of the module at least a predefined distance from the carpus. This may be due to the mechanical properties of the band **920**, the module **930**, and/or as a result of a sensor providing an indication of an incorrect and/or correct usage of the band **920** and/or module **930**. In yet another embodiment, the sensing surface is at least located 20% of the distance away from the carpus. In another embodiment, the band may be configured to retain a sensing surface of the band at least a predefined distance of the distance from the elbow joint (or equivalent).

In one embodiment, one or more sensors of the module (alone and/or with other external sensors) may be utilized to detect the location of the module **930**, a sensing surface of the module, a sensing location, and/or the band **920**. This may be done directly or indirectly. In certain embodiments, one or more non-transitory computer-readable mediums may comprise computer-executable instructions, then when executed by a processor cause the processor to at least conduct a location calibration routine. The computer-readable medium(s) may be located entirely on the module, an external electronic device, such as a mobile or cellular device, and/or combinations thereof. One or more calibration routines may be automatically initiated, such as by being triggered by sensing one or more criteria (e.g. with a sensor of the module) or through a manual initiation, such as by a user initiating the routine.

Movements during the athletic activity will naturally cause physical movements of anatomical structures, including joints and flexing muscles. As one example, flexing muscles may cause relative and absolute changes in locations and orientation of sensor sensing surfaces and/or sensing locations. As discussed herein, having the band, sensing surfaces, and/or sensing locations located in positions to reduce or eliminate flexure-causing inaccuracies will improve the utility of such sensing systems when compared with prior-art systems. For example, the device (or location (s)) may be positioned to reduce or eliminate forearm tension in one embodiment. In another embodiment, systems and methods may be implemented to identify the extent of actual and/or anticipated flexure or anatomical movement. In further embodiments, one or more calibration or correction factors may be applied to sensor readings based upon flexure or other anatomical movements. In one embodiment, only flexure of one muscle or group of muscles may be considered. This may be the case even when other muscles' flexure is present.

FIG. **6** shows a chart comparing different exercises to the mean of a heart rate sensor's output based upon different movements. Specifically, looking to FIG. **6**, the Y-axis comprises a plurality of different exercises. The exercises are categorized into three sections, which are indicated by the numeral 1, 2, or 3 preceding each description. The numerals are merely used to distinguish different groups and

has no other significance to FIG. **6** for purposes of this disclosure. By distinguishing the exercises, a "Fullbout Set" exercise could be provided which includes each exercise in the categories (1, 2, and 3). The X-axis of the chart shown in FIG. **6** shows the confidence interval for the mean heart rate measurement. As seen in FIG. **6**, exercises generally known to cause tension in the forearm muscles scored lower than other exercises that cause lesser tension in the same muscles. For examples, "CnJ", "Thruster", and Row" all require a greater tension in forearm muscles when compared to "BoxJumps".

Certain embodiments, therefore, may be used to detect movements and/or account for some movements. In further embodiments, a calibration may be performed before a specific type of athletic activity to ensure variations are within a specified range. The range may be determined by demographic information, the type of activity to be performed, known correction factors or limitations, among others or combinations thereof. In one embodiment, a user may be prompted to perform a movement to trigger a known tension (or range of tension) within a specific muscle or group of muscles. In one embodiment, systems and methods may be implemented to cause a user to flex a certain muscle or group of muscles. For example, a user may be prompted to perform a specific athletic activity or group of activities, including one or more activities shown in FIG. **6**. In one embodiment, sensor readings may be used to determine an individual's flex, which may be influenced by a user's anatomical and/or physiological characteristics. In one embodiment, a computer-readable medium may comprise computer-executable instructions that when processed by a processor, may combine the outcome of the sensor readings during calibration with other factors, which also may be stored entirely or partly on the module **930**. Examples include demographic information, such as a user's sex, weight, age, and/or other attributes.

In further embodiments, other attributes such as a user's BMI and/or other demographic, physiological, biological, and/or anatomical parameters may be utilized in accordance with certain embodiments to augment processing of sensor data, such as for example an optical heart rate sensor Optical properties of light utilized in optical heart rate measurements, including the light's transmittance, reflectance, backscatter, and/or other properties, alone, in combination, and/or synergistically may be influenced by a user's build, such as muscle mass, lipids making up adipose tissue, water, electrolyte levels, and/or other content or properties of such contents. As discussed below, locational distribution of such contents may play a role. Aspects of this disclosure relate to systems that may receive an indication of an athletic parameter, e.g., BMI, adipose tissue presence (either proximate or within the range of the optical light waves being transmitted or received by the measurements, or alternatively systemic or regionally, such as along the forearm, back arm, waist, buttocks, etc.), and/or hydration levels, and adjust one or more aspects relating to heart rate measurements, such as, but not limited to: (1) changing or augmenting an algorithm or process used to obtain the measurements, such as for example, the weights assigned to the measurements of heart rate measurements or using a different wavelength and/or frequency of measurements; (2) determining whether to use or not use heart rate (or data from a specific sensor) as a measurement; (3) adjusting how heart rate may be calculated (e.g., from a different sensor or collection of sensors) including automatically altering the locational properties of the sensor or prompting the relocation of the sensor, and/or (4) re-interpreting heart rate measurements from one or more processes, which may collectively or individually be referred to as adjusting or augmenting a heart rate measurement protocol.

As one illustrative example, FIG. **7** shows flowchart **700** that may be implemented to augment one or more processes. As shown in flowchart **700**, an athletic parameter (e.g., such as BMI) may be obtained or determined, such as by a processor located on module **930** (e.g., block **702**). The parameter may be a single parameter from a single sensor or a plurality of parameters from one or more sensors. In further embodiments, a single parameter may be calculated or determined from several sub-parameters. In certain embodiments, the parameter may be predetermined, such as the user's gender, weight, and/or height. However, weight or other parameters that may be predetermined in previous calculations may be confirmed or refreshed using sensor data. In an example embodiment measuring BMI, the most-widely accepted calculation is to divide body weight (kg) by height ($m^2$), thus BMI=weight/height. The parameter(s) of block **702** may be utilized as a threshold level (e.g., decision **704**). If criteria is met, e.g., threshold or range rules are within operational criteria, then a default heart rate measurement protocol may be enacted (e.g., block **706**). The protocol may be a specific algorithm and/or use specific wavelengths of light and/or light intensity to obtain readings. In certain embodiments, values exceeding (or not meeting) a threshold value or not within a range of values may cause a processor to execute a secondary heart rate measurement protocol (e.g., block **708**), which may for example prompt a different algorithm to be implemented or another process to be augmented, such as for example, weights or confidences assigned to heart rate measurements, the utilization of heart rate as a measurement, adjusting how heart rate may be calculated, and/or interpreting heart rate measurements from one or more processes, as well as any other alteration of a heart rate measurement protocol provide herein. Using BMI as an example parameter, a BMI value of about 25 (which is commonly accepted as the dividing line between "normal" and "overweight") may be a threshold, in yet another embodiment, a BMI of about 20 (which is commonly accepted as the dividing line between "underweight" and "normal") may be utilized. Those skilled in the art will appreciate that multiple thresholds or ranges may be used, which may be higher, lower, and/or in-between these values. Generally, as described above, a user's BMI is calculated by dividing the body weight (kg) by height ($m^2$), thus BMI=weight/height. Given its inputs, BMI values may be artificially inflated or deflated based on an individual's specific build or other factors, some of which are described herein. In certain embodiments, other criteria may be utilized to weight or augment a BMI score. In further embodiments, other criteria may be used independently of BMI. BMI may not be used in certain embodiments, and a different metric may potentially be used in its place.

In this regard, the inventors have determined that individuals with lean body structures may be more susceptible to imprecise and/or inaccurate heart rate readings from optical heart rate monitors, even when blocking ambient light and controlling for other variables. For example, as shown in FIGS. **8-10**, chart **800** shows an example parameter (e.g., BMI) along the x-axis (element **802**) plotted against a performance score (e.g., a bout score) that may be calculated by a processor, based at least in part on heart rate measurements using an optical heart rate sensor, plotted along the y-axis (element **804**). Looking first to FIG. **8**, line **806**, the correlation of the BMI parameter to the bout score, may be expressed as a best fit using the following: Bout

Score=1.6327 BMI+24.811. In this specific embodiment, line **806** exhibits an $R^2$ value=0.0609. Looking to chart **800** of FIG. **8**, performance scores among individuals with lower BMI scores show more variance than the individuals with higher BMI scores. Further, each performance score below 40 (with respect to y-axis **804**) was collected from an individual having a BMI<25. FIGS. **9** and **10** show sub-populations of the data presented in FIG. **8**, specifically, in the illustrative example, FIG. **9** shows the respective data points obtained from male individuals and FIG. **10** shows respective data points obtained from female individuals. As shown in FIG. **9**, line **808**, a correlation of the BMI parameter to the performance score (e.g., bout score) may be expressed as a best fit using Bout Score=4.1962 BMI−42.305. In this specific embodiment, $R^2$ may be=0.3001. As shown in FIG. **10**, line **810**, a correlation of the BMI parameter to the example performance score (e.g., bout score) may be expressed as a best fit using Bout Score=−0.4258x+83.772. In this specific embodiment $R^2$ may be=0.0098. Gender differences exist with respect to adipose tissue and the storage of lipids, including locational distribution, quantity, and other variables. Therefore, in one embodiment, block **702** may determine gender, age, or other parameters (alone or in combination) to determine to implement a first algorithm may be utilized to measure heart rate from user's with a BMI (and/or other parameters) below a threshold and a second algorithm may be used to measure heart rate from users above and/or meeting the threshold (e.g., blocks **706** and **708**). A plurality of thresholds may be used.

In certain embodiments, decision **710** may be implemented after block **702** to determine if a second parameter is out of range or violating a threshold. The second parameter may be any parameter, including those discussed herein, including a derivation of the first parameter. If there is not a threshold violation and/or criteria is being met, the current in-place heart rate measurement protocol may be left intact (e.g. block **712**). Alternatively, if decision **710** is in the negative, certain embodiments may modify one or more aspects of the current protocol (e.g., block **714**). For example, a different optical wavelength may be used to detect heart rate on one or more individuals meeting one or more criteria, such as any discussed herein or known in the art. In yet further embodiments, a scalar may be applied to heart rate measurements obtained from those individuals meeting one or more criteria. Environmental cues and data, such as from light sensors, temperature sensors, and the like may further provide immediate and/or long term sensor data that may provide insights to the user's adipose tissue, muscle mass, etc. Further, in certain embodiments, distance between the sensor and the user's skin may be adjusted automatically or requested to be done manually based upon altering a protocol.

In yet another embodiment, one or more correction factors and/or calibration values may be altered or created based upon detecting the athletic activity a user is performing. The detection may be based, partly or wholly on sensor readings from the module **930**. In one embodiment, external data may be received and utilized, such as for example from a user's electronic mobile device and/or another fitness device. In one embodiment, data from a user's schedule, past athletic data, friend's data, historical analysis, manual user input, locational data, and/or combinations thereof and others may be used to determine an athletic activity. In one embodiment, for example, it may be determined that a user is performing or is likely to perform an athletic activity that is associated with more elevated flexion values, and therefore, one or more instructions may be executed, such as confirming the band **930**, module **940**, and/or another apparatus is within a certain location or within an operational state, such as but not including adjusting one or more sensing parameters. In yet another embodiment, the user may be required to conduct one or more different movements or activities to recalibrate the band **920**. In further embodiments, the user may be prompted to locate the band **920** or module **930** at a specific location. In still further embodiments, the user may be prompted to use a specific module. For example, replaceable modules may be interchanged for increased sensitivity, different sensing characteristics, and/or comfort based upon different factors for different activities (and/or user preference).

In various embodiments, the user may get feedback to reposition the module **930**, band **920** and/or to conduct one or more analytics. Further, the system may provide feedback to indicate ranges or percentages of the user, such as to let the user decide whether the ranges/percentages are acceptable or rather to reposition or switch out components of the system.

Additional Hardware

FIGS. **102-111** illustrate embodiments for use with a band **920** that includes some or all of the features of the band **920** illustrated in FIGS. **68-70**C, and may be manufactured in a manner similar to the method illustrated in FIGS. **71-91**. Thus, the features and manufacturing techniques of the band **920** of FIGS. **102-111** that are similar to those already described will not necessarily be described again for the sake of brevity. Similar components described already may be referred to using similar reference numbers.

In the embodiments of FIGS. **102-111**, the band **920** includes a input device **1000** connected to the housing **963** and/or otherwise received within the pocket **940** and configured for connection to the module **930** when the module **930** is received within the pocket **940**. The input device **1000** has one or more buttons **1001** thereon that are accessible from the outer surface **928** of the band **920**, such as through the outer wall **943** of the band **920**. The input device **1000** is configured for communication with an external device **1002**, as shown in FIG. **111**, and may have any of the components of the computer device **200** described above. In one embodiment, the input device **1000** includes a wireless transmitter **1003** (which may be part of a transceiver) configured for communication with the external device **1002**, a port **1004** for connection to the connector **935** of the module **930**, and potentially a small memory and/or processor for operation of the button(s) **1001**, transmitter **1003**, and port **1004**. In one embodiment, the input device **1000** may include no internal operating system or significant software, and the input device **1000** may be configured to simply transmit a signal that the button **1001** was pressed, along with the sequence and/or length of the button press(es) **1001**.

The button(s) **1001** of the input device **1000** may be one of a number of different types, including a tactile/mechanical button, a touchscreen, a heat-sensitive button, or other device capable of registering a touch by the user. It is understood that some types of buttons **1001** may require a window or other passage through the outer wall **943** of the band **920** for operation. In the embodiments of FIGS. **102-111**, the input device **1000** includes tactile buttons **1001**. The input device **1000** may include one or more additional buttons **1001**, as illustrated in FIGS. **102-110** and described below. For example, each of the embodiments in FIGS. **102-109** has a main button **1001**A and an optional additional volume control button **1001**B. Various techniques and methods of operation of the button(s) **1001** are also described

below. The band **920** may also have indicia **1008** on the outer surface **928** to inform the user where to press to activate the button(s) **1001**, as shown in FIG. **109**.

The transmitter **1003**, which may be part of a transceiver as stated above, is configured for wireless communication with one or more external devices **1002**, as illustrated in FIG. **111**. It is understood that any of the embodiments of FIGS. **102-111** may have such a transmitter **1003**. In one embodiment, the transmitter **1003** may be a Bluetooth or Bluetooth Low Energy (BTLE) transmitter. In other embodiments, the transmitter **1003** may use different transmissions, frequencies, protocols, etc., such as a Wi-Fi transmitter.

The port **1004** may include any connecting structure, and the configuration of the port **1004** may depend on the configuration of the module **930** to which it is connected. In the embodiment of FIGS. **102-111**, the port **1004** is a USB or USB-compatible port configured to connect with the USB connector **935** on the module **930** of FIGS. **60-63**. It is understood that the port **1004** may not include all of the hardware of a typical USB port in one embodiment, as the port **1004** may be configured only to draw power from the module **930** for operation of the input device **1000**, and not to exchange data with the module **930**. In another embodiment, the input device **1000** may be configured to operate as a wireless communications interface between the module **930** and the external device **1002**, e.g., by receiving and/or transmitting data from/to the module **930** through the port **1004** and receiving and/or transmitting data from/to the external device **1002** through the transmitter **1003**.

The input device **1000** may further include haptic feedback features (not shown), such as a vibration motor, to communicate various alerts to the user. The input device **1000** may be configured for providing different types of haptic feedbacks, such as a steady vibration, pulsed vibration, etc. The input device **1000** may receive signals from the external device **1002** to generate specific haptic feedback. In one embodiment, the resolution of when to generate haptic feedback and which haptic feedback to generate is performed by the external device **1002**, such that the input device needs only to receive the signal and generate the haptic feedback. The external device **1002** may utilize user settings for providing specific haptic feedback in the event of a specific occurrence, e.g., an incoming phone call, an emergency alert, an activity milestone reached, or other event. Haptic feedback may be used in connection with the various applications and functions described below.

The input device **1000** may be positioned within the pocket **940** and/or the housing **963**, may be positioned adjacent the pocket **940** and/or the housing **963**, may form a part of the pocket **940** and/or the housing **963**, or may be a separate element connected to the module **930**, in various embodiments. In the embodiment of FIGS. **102-103**, the input device **1000** is a separate device that is permanently or removably connected within the housing **963**. The input device **1000** in this embodiment is in the form of a casing positioned within the end of the housing **963**, proximate the narrowed portion **965** of the opening **942** (i.e., where the connector **935** of the module **930** is received), with the port **1004** having an opening facing into the pocket **940** defined by the housing **963**. In this position, the module **930** can be inserted into the housing **963** so that the connector **935** is received within the port **1004**, as shown schematically in FIG. **106**. The input device **1000** may be permanently connected within the housing **963**, such as by adhesive or other bonding technique, fasteners, integral forming, or other techniques, in one embodiment. The input device **1000** may be removably connected within the housing **963** in another embodiment. Such a removable input device **1000** may be removed from the housing for connection or disconnection with the module **930**, as shown in FIGS. **107-110** and described below. Alternately, such a removable input device **1000** may be retained within the housing **963** as the module **930** is connected and disconnected, such as by a releasable retaining structure on the input device **1000** and/or the housing **963**, a high-friction fit that is sufficient to retain the input device **1000** in place during activity or removing the module **930** from the port **1004**, or other removable configuration. The housing **963** may also have features to facilitate access to the buttons **1001**. For example, as shown in FIG. **103**, the housing **963** has one or more openings **1005** on the outer wall **943** to permit access to the button(s) **1001**. In another embodiment, the housing **963** may have one or more protrusions on the inner surface of the outer wall **943** adjacent to the button(s) **1001**, so that force exerted on the housing **963** can reliably activate the button(s) **1001**, similar to the protrusion **987** described above.

In the embodiment of FIGS. **104-105**, the input device **1000** forms a part of the housing **963** or forms part of a unitary structure with the housing **963**. The input device **1000** in this embodiment forms an end of the housing **963** proximate the narrowed portion **965** of the opening **942**, and has an outer shape and contour that are substantially contiguous with those of the housing **963**. As shown in FIGS. **104-105**, the input device **1000** has a flange **967** that is continuous with the flange **967** of the housing **963**. The input device **1000** joins with the housing **963**, and the housing **963** has an open end **1006** adjacent the input device **1000** in communication with the pocket **940**, such that the port **1004** of the input device **1000** is placed in communication with the pocket **940** defined by the housing **963**. In this configuration, the connector **935** of the module **930** is received within the port **1004** when the module **930** is inserted into the housing **963**, as shown schematically in FIG. **106**. The input device **1000** may be permanently connected within the housing **963** in one embodiment, or may be removably connected within the housing **963** in another embodiment, for example, by using one of the permanent or removable connection techniques described elsewhere herein. In this embodiment, the button(s) **1001** may be positioned on the outer surface of the input device **1000**, as shown in FIG. **105**.

In the embodiments of FIGS. **107-108**, the input device **1000** is a separate device that is configured for insertion into and removal from the housing **963** and the pocket **940** along with the module **930**. The input device **1000** in each of these embodiments is in the form of a casing that is connected to the module **930** by inserting the connector **935** of the module **930** into the port **1004** outside the housing **963**, and then inserting the module **930** and the input device **1000** simultaneously into the housing **963**. Once inserted, the input device **1000** is positioned within the end of the housing **963**, proximate the narrowed portion **965** of the opening **942**, similar to the position shown in FIG. **102**. Connection of the module **930** to the input device **1000** to form a connected structure **1007** and insertion of the connected structure **1007** into the pocket **940** defined by the housing **963** is shown schematically in FIG. **110**. The input device **1000** of FIG. **107** differs from the input device **1000** of FIG. **108** primarily in the location of the volume control button **1001**B, which is located on the top surface of the input device **1000** in the embodiment of FIG. **107** and is located on the side surface of the input device **1000** in the embodiment of FIG. **108**. It is understood that the housing **963** and/or the band **920** may be configured for use with either of the input devices **1000**

of FIGS. **107-108**, such as by effective location of features for operating the button(s) **1001**, including openings **1005**, protrusions **987**, indicia **1008**, etc.

The input devices **1000** in FIGS. **102-110** are shown and described as being usable in connection with a band **920** as illustrated in FIGS. **68-70**C and manufactured as illustrated in FIGS. **71-91**. In other embodiments, the various embodiments of input devices **1000** described herein may be utilized with other embodiments of bands **920** as described herein, for example, the bands **920** shown in FIGS. **39**A-B and manufactured as shown in FIGS. **18-38**. It is understood that the input device **1000** and/or the band **920** may be modified to provide suitable functionality for such a combination.

As described above, the input device **1000** is configured for communication with an external device **1002** through the transmitter **1003**, as shown in FIG. **111**. The external device **1002** may include any components of the computer device **200** described above, and may be a mobile phone or other mobile device that can be carried by or positioned near a user during physical activity. As also described above, the input device **1000** may be configured to transmit signals to the external device with button input indicating the activation of the button(s) **1001**, which includes the sequence and/or length of the button press(es) **1001**. The external device **1002** may include software configured to receive the button input as input and take further action based on the button input. For example, the software on the external device **1002** may interpret specific sequences of button **1001** presses (e.g., a single, double, or triple-tap) as different input signals, and/or may interpret long-hold button **1001** presses as different from button taps. Further, the external device **1002** can be programmed to interpret and use the button input as different inputs for different purposes, and the device **1002** may include various preprogrammed and/or user-selected settings governing the interpretation of the button input. The external device **1002** may include various applications and functionality that are controlled and/or influenced by the button input, according to the settings.

The input device **1000** may be in communication with multiple external devices **1002**, either simultaneously or alternatively, and the module **930** may be in communication with the input device **1000** and/or the external device **1002**. The input device **1000** and/or the external device **1002** may also be in communication with an external camera **1008**, such as a body-mounted camera that may be capable of video and/or still photo capture. The camera **1008** may be controlled directly by input from the input device **1000**, or the button input may be used by the external device **1002** as instructions for controlling the camera **1008**. The input device **1000** and/or the external device **1002** may also be in communication with one or more assemblies such as the assemblies **400**, **304** shown in FIGS. **4-5** and described herein, for collection and/or communication of additional data. It is understood that the external device **1002** may receive button input from a different type of input device, for example, the module **930**, an assembly **400** as shown in FIG. **4** or other wearable assembly (e.g., a smart watch), and that the methods, functions, and operation of the external device **1002** as described herein are not limited to use with an input device **1000** according to the embodiments described herein. For example, the functions and applications described below may be operated by the external device **1002** without input from the input device **1000** or any other input device. Still further, it is understood that some processing of information performed by the external device **1002** may include sending the information to another device (e.g., a server) for processing and receiving further information from the other device.

In one embodiment, the external device **1002** may operate as illustrated in FIG. **112**. In this method of operation, the external device **1002** receives selection of one of a plurality of settings from the user, governing the functioning of the device **1002**, such as through a user input of the device **1002**, or through a specific sequence of button presses from the input device **1000**. The settings may include one or more specific applications to operate as well. The external device **1002** then receives the button input from the input device **1000**. The external device **1002** can then interpret the button input based on the settings selection and take one or more actions based on the interpretation of the button input. A non-exhaustive list of examples of actions that may be taken based on the button input includes: storing or deleting information; sending a signal to one or more other devices; initiating, answering, or ending a phone call; sending a text, picture, or video message; posting information to a website, social media outlet, blog, RSS feed, etc.; sharing information with a specified group of people and/or other devices; transmitting a location signal; controlling music and/or video being played by the external device **1002**; controlling a camera, including an integral camera of the external device **1002** or an external camera **1008**; interacting with the module **930**; transmitting data received from the module **930**; powering the external device **1002** and/or the input device **1000** on or off; as well as other functions. After taking the action, the external device **1002** may continue to function using the same settings or may receive selection of other settings. Using the input device **1000** to transmit input to the external device **1002** may permit the user to control the external device **1002** without directly accessing the device **1002**, or even if the device **1002** is not in the user's immediate possession (e.g., located in a gym bag on the bench during a sporting event). This greatly improves the versatility of the use of the external device **1002**, as well as other components such as the camera **1008** and the module **930**, which may be difficult or impossible to operate directly during certain physical activities.

Phone

One potential application or function that the external device **1002** may use in connection with the input device **1000** is operation of a telephone, such as a phone that is integrated within the external device **1002**. For example, the button input may be used to place a call to a pre-selected number, answer an incoming call, switch to a held call, end a call, activate/deactivate speakerphone, change volume, and other functions. This enables the telephone to be operated without directly accessing the external device **1002**, which may be difficult or clumsy during physical activity. A wireless headset or earpiece may be used in connection with the telephone as well. In one embodiment, the input device **1000** may include a dedicated button for volume control (button **1001**B as described above), which may be used with a phone. The telephone operation may be used in connection with other functions or applications, such as the safety application(s) discussed herein. It is understood that the pre-selected phone number for a call, as well as the various control functions of the telephone with respect to the input device **1000**, can be controlled by user settings.

Music

Another potential application or function that the external device **1002** may use in connection with the input device **1000** is operation of a music or video player, such as a music or video player that is integrated within the external device

1002 or controlled by the external device 1002. The button input may be used for functions such as play, pause, skip, repeat, forward, rewind, power on/off, selection of a specific song to play or a specific video or photograph to display, and volume control, among others. In one embodiment, the input device 1000 may include a dedicated button for volume control (button 1001B as described above), which may be used with a music or video player, or in another embodiment, sequences of the main button 1001A may control such features. It is understood that the pre-selected specific song, as well as the various control functions of the music or video player with respect to the input device 1000, can be controlled by user settings.

Camera

Another potential application or function that the external device 1002 may use in connection with the input device 1000 is operation of a music or video player, such as a music or video player that is integrated within the external device 1002 or controlled by the external device 1002. The button input may be used for functions such as taking a photo, series of photos, or video; transmitting, uploading, and/or sharing a photo or video; controlling camera or media settings such as exposure, sensitivity, filters, or video recording speed; and other functions. The camera operation may be used in connection with other functions or applications, such as the safety application(s) discussed herein. For example, the external device 1002 may be configured to activate the camera 1008 any time a safety issue is indicated, or when unexpected stops are detected along a running route, for safety and/or sharing purposes. It is understood that the various control functions of the camera with respect to the input device 1000 can be controlled by user settings.

Mapping

Another potential application or function that the external device 1002 may use in connection with the input device 1000 is operation of mapping features and/or applications of the external device. The button input may be used for functions such as accessing a map, setting a destination or waypoint, storing or transmitting a current location, finding the location of another user or device, or various other controls. The mapping operation may be used in connection with other functions or applications, such as the safety application(s) discussed herein. It is understood that the various control functions of the mapping features with respect to the input device 1000 can be controlled by user settings.

Activity Tracking and Sharing

Another potential application or function that the external device 1002 may use in connection with the input device 1000 is an activity tracking and/or sharing application, where users can share activity information with others, such as sharing among members of a designated group. Examples of such activity information include activity session information, photographs, text posts, locations, as well as other types of information. The button(s) 1001 can be used to quickly share information with others. For example, various button sequences may be used for tracking functions such as beginning or ending activity tracking, marking desired temporal points or locations during activity, switching from tracking one type of activity to another, displaying activity information on the external device 1002, or other functions; and various button sequences may also be used for sharing functions such as sharing activity session data, taking or sharing a photo or video, sharing a current location, detecting another user's location, or sending a pre-programmed text message to specified persons (e.g., "I'm starting/finishing my run"). It is understood that the content of such a pre-programmed message, as well as the various control functions of the application with respect to the input device 1000, can be controlled by user settings.

In one embodiment, the external device 1002 can obtain activity information shared by another user (e.g., one or more other runners), such as the location and speed of the other user(s), a planned running route, or other information, and then display and/or further process this information. Such further processing may include calculating a pace and/or a shortcut for the user to catch up to the other user, planning a route to meet the other user, transmitting the user's own information to the other user, etc. For example, if the user arrives late to an organized group run with a pre-planned route, the device 1002 can plot a route and pace for the user to catch up to the other runner(s) based on the pre-planned route and the other runner's position and speed. As another example, if a user has a friend competing in a large race, the device 1002 can locate the friend and set a pace for the user to catch the friend, based on the race route and the friend's location and speed. As a further example, the device 1002 could send a message to the other runner(s) in the previous examples to reduce their pace and/or take another route to facilitate the user catching up. Plotting of routes as described above may further incorporate safety features as described herein, such as by plotting routes that avoid known or suspected safety hazards based on safety information.

In another embodiment, the external device 1002 may combine the activity tracking and music player applications together, allowing the user to control both applications and switch between the two applications using only the input device 1000. FIG. 113 illustrates one example of a control scheme for controlling and switching between these two applications using the main button 1001A on the input device 1000. It is understood that the control scheme in FIG. 113 switches between control of these two applications, but that switching need not deactivate the de-selected application unless desired by the user. Other control schemes could be used in other embodiments, and the control scheme may be at least partially dictated by user-controlled settings. Control schemes similar to the example in FIG. 113 could be used in connection with other applications and functions of the external device 1002, for simultaneously controlling two or more different applications or functions and switching between such applications or functions, using the input device 1000.

In a further embodiment, the activity tracking application may include an activity selection setting, which permits the user to select an activity from the list, such that the device 1002 operates differently for different activity selections. For example, the device 1002 may have one set of user settings for interpreting button input for one activity and another set of user settings for interpreting button input for a different activity. As another example, the device 1002 and/or the module 930 may collect and interpret movement data differently based on different activity selections. As a further example, the device 1002 may instruct the input device 1000 to provide different types of haptic feedback for different purposes based on the activity selection. Other example selections may be used as well.

Safety Alert

Another potential application or function that the external device 1002 may use in connection with the input device 1000 is a safety alert application, which can alert others of potential safety concerns, such as attacks, accidents, crimes, fires, etc. In one embodiment, the external device 1002 may be programmed to contact others when signaled to do so by

the input device **1000**, such as alerting friends and/or family, alerting police or emergency services, etc. For example, specific button press sequences on the input device may control the device **1002** to send a pre-programmed text or other message (e.g., a call for help), transmit the user's location, initiate a phone call to a pre-selected recipient, transmitting and/or storing information regarding safety concerns, initiating an audible alarm (e.g., through speakers on the external device **1002**), take a photo or video with the camera **1008**, or other functions. An audible alarm may include a siren or other alert sound, music from a music player, or other audible alarm, and the device **1002** may automatically deactivate any headphones or similar equipment upon sounding the alarm. As one specific example, one button sequence may automatically share the user's location with others, and another button sequence may share the user's location with an indication of a safety issue, while a third button sequence may generate an emergency alert. It is understood that the various control functions of the application with respect to the input device **1000**, including the identities of emergency contacts and the content of any automated messages, can be controlled by user settings.

In one embodiment, the devices **1000**, **1002** may be used as part of a group or network of users to share safety information. For example, a user's device **1002** may share intended running information (e.g., intended distance, time of run, start and end points, etc.) with a designated group, to give the group a general idea of where the user will be at a specific time of day, in case a safety issue arises. A specific intended route may be shared as well. The device **1002** may also periodically send position updates to the group, which position updates can be performed automatically on a periodic basis, upon indication from the user (e.g., through the input device **1000**), or upon detection that movement has changed (e.g., a stop or pause in running) Such a group may be configured to share all safety information with each other, and may be set up in advance as a temporary or persistent group. As another example, the external device **1002** may be configured to send emergency alerts or safety information to others in the group. As another example, the external device **1002** may be configured to take specified actions when an emergency alert is received from another user, such as automatically answering an emergency phone call or activating an audible alarm. In one embodiment, if another designated user sends out an emergency alert SMS message, the external device **1002** may be programmed to automatically answer any call from the other user within a specific time period following the alert message, or at any time until the other user sends a subsequent alert deactivation message. As a further example, the external device **1002** may be configured to alert the user when the user is in or approaching a potential hazard identified by another user in the network.

In another embodiment, the devices **1000**, **1002** may be used as part of a safety information system. The safety information system may be operated in a network environment, which may include one or more servers and a number of other electronic devices. Communications through the safety information system may be made through a server or directly between devices. The system may collect and provide various types of safety information. For example, the safety information system can collect user-generated safety information from a plurality of different users/devices, including the external device **1002**. Such safety information may include the locations and times of emergency alerts, locations and times of other potential safety issues, and gathered qualitative safety information. It is understood that the safety information may include positive safety information as well as negative safety information. Examples of different types of qualitative safety information include: areas where suspicious persons are known to congregate, areas that are isolated or desolate, areas with few or no street lights, areas with no sidewalks, popular pedestrian routes, areas that "feel" unsafe to the user, areas that frequently flood after rains, and other types of qualitative information. The qualitative information may include some quantitative component as well, such as a "danger" rating on a quantitative scale. The safety information may also include crime maps, which may be publicly accessible and/or privately generated based on crime data aggregation. The safety information may be categorized by location, time of day, whether a safety issue is temporary or persistent, type of safety issue (e.g., crime, fire, suspected threat, weather or environmental hazard, wildlife, etc.), quantitative danger rating, and other categorizations.

The safety information system may present or provide the safety information in a number of different ways. As one example, the device **1002** may generate an indication of a safety alert that has recently been generated by another user in the current area or along a planned route. As another example, the device **1002** may generate an indication that historical or aggregated safety information indicates that the present area, the area of a planned route, or the area the user is approaching includes a potential safety issue. FIG. **114** illustrates one example of a display on the external device **1002** indicating a potential safety hazard in an area near the user's location. An indication of a safety issue may factor in the current time or the time the user is expected to enter the area, if the safety issue is time-dependent, such as a recently-occurring event or a time of day when the safety issue is known or thought to exist based on historical information. An indication of a safety issue may also factor in a specific size of the relevant area (e.g., a radius around the user and/or around the safety issue). As another example, the device **1002** may generate a suggested action in response to a safety issue, such as turning around, suggesting an alternate route, taking cover, etc. Such suggested actions may be based on the nature of the safety issue, calculations performed by the device **1002** (e.g., alternate routes), public emergency notices (e.g., severe weather warnings), and other information. FIG. **115** illustrates one example of a display of the external device **1002** suggesting an alternate route to the user to avoid a safety hazard.

Route Recommendations

Another potential application or function that the external device **1002** may use in connection with the input device **1000** is a running route recommendation application, where the device **1002** can recommend running routes to the user based on various information including desired running location, desired start or end points, desired length of run, desired time of day of the run, safety information (as described above), other user-generated information such as route quality ratings (scenery, difficulty or ease of run, etc.), and other factors. In one embodiment, the user may input the desired run information into the device **1002**, and the device generates a running route that conforms to the run information and avoids safety issues as discussed above. The device **1002** may dynamically alter the running route in progress based on new safety information, as also described above. The user may be able to share any information about the run with other users during or after a run as well, including safety information and route quality ratings or comments, which may be used by the device **1002** and/or other users' devices in generating future running routes. It is understood

that the various control functions of the route recommendation application with respect to the input device **1000** can be controlled by user settings.

The route recommendation function of the devices **1000**, **1002** can also be used in connection with a larger route recommendation system and network. The system may aggregate information from various users regarding specific running routes and use that information to generate future running routes based on user-defined criteria. For example, the system may make safety information and route quality ratings or comments available to users and their devices **1002**. As another example, the system may develop and/or store "recommended" running routes in a specific area, and users who run the recommended routes can generate information regarding the route, such as safety and/or quality information. It is understood that such user-generated information may have a time-of-day component as well, such as safety issues that exist only at certain times of day or increased/decreased run quality at specific times of day. Thus, a route may only be recommended for specific times of day, or different quality/safety ratings for different times of day may be made available to the user. The system may further be configured to use only selected safety and/or quality information when providing a recommended route or when making such information available to the user, such as information of a certain category or quantitative/qualitative rating, or information generated by specific other users (e.g., a user's friends, other users with similar interests and preferences, other users of a specific gender, etc.). The system may alternately be configured to weigh such selected safety/quality information more or less heavily when providing a recommended route. For example, female users may desire route recommendations based on safety information generated by other female users, or runners who enjoy scenic routes may desire route recommendations based on quality information from other users with similar preferences.

Anti-Theft

Another potential application or function that the external device **1002** may use in connection with the input device **1000** is an anti-theft application, which can be used in the event of a theft or attempted theft of the external device **1002**. For example, different button sequences on the input device **1000** may generate an alarm in the event of a theft attempt, lock the device **1002** to prevent access by others, generate an alert to law enforcement with a location of the device **1002**, prevent powering off or deactivation of the device, or other anti-theft measures. It is understood that the various control functions of the anti-theft function with respect to the input device **1000** can be controlled by user settings.

The systems and networks described above, such as the safety information system, the route recommendation system, and emergency alerts, may access or communicate with other existing systems in connection with providing functionality. For example, such systems may exchange information with a public or private emergency service, such as gathering safety information from such services and/or transmitting emergency alerts to such services. Other examples of such cooperative information sharing may be used as well.

Several alternative embodiments and examples have been described and illustrated herein. A person of ordinary skill in the art would appreciate the features of the individual embodiments, and the possible combinations and variations of the components. A person of ordinary skill in the art would further appreciate that any of the embodiments could be provided in any combination with the other embodiments disclosed herein. It is understood that the invention may be embodied in other specific forms without departing from the spirit or central characteristics thereof. The present examples and embodiments, therefore, are to be considered in all respects as illustrative and not restrictive, and the invention is not to be limited to the details given herein. Terms such as "first," "second," "top," "bottom," etc., as used herein, are intended for illustrative purposes only and do not limit the embodiments in any way. Additionally, the term "plurality," as used herein, indicates any number greater than one, either disjunctively or conjunctively, as necessary, up to an infinite number. Further, "providing" an article or apparatus, as used herein, refers broadly to making the article available or accessible for future actions to be performed on the article and does not connote that the party providing the article has manufactured, produced, or supplied the article or that the party providing the article has ownership or control of the article. Accordingly, while specific embodiments have been illustrated and described, numerous modifications come to mind without significantly departing from the spirit of the invention.

What is claimed is:

**1**. A device configured to be worn on an arm of a user comprising:

a first component configured to be worn at any one of a plurality of locations along an arm of a user and further configured to removably receive at least a portion of a second component;

a second component comprising a housing, the housing including:

a sensor, such that upon proper reception of at least a portion of the housing of the second component to the first component, the sensor is aligned at a first orientation that is directly on or over the arm of the user;

a processor; and

a non-transitory computer-readable medium that comprises computer-executable instructions, that when executed by the processor, perform a calibration comprising at least:

receive first sensor data from the sensor at a first time period in which: (1) the first component is located at a first location of the plurality of locations, and (2) the second component is properly received with respect to the first component;

calculate, using the first sensor data, a first value of a physiological parameter for the user;

instruct the user to perform a specific activity configured to trigger a known tension within a specific muscle within the arm at the first location;

receive second sensor data from the sensor during the specific activity;

calculate, using the second sensor data, a second value of the physiological parameter for the user; and

compare the first value for the physiological parameter to the second value for the physiological parameter,

wherein if the first value for the physiological parameter is within a threshold range of the second value for the physiological parameter, communicate a notification to the user that a calibration is complete, and

wherein if the first value for the physiological parameter is outside of a threshold range of the second value for the physiological parameter, instruct the user to reposition the device on the arm to a second location within the plurality of locations.

2. The device of claim 1, wherein the specific activity is configured to cause movement to trigger a known tension within a specific muscle of a forearm of the user.

3. The device of claim 1, wherein the first sensor data is associated with a period of rest for the user.

4. The device of claim 1, wherein when at the first location, the device is worn on the forearm of the user in a position having a first distance to the user's elbow, and wherein the second position is located on the forearm at a second distance to the user's elbow, wherein the second distance is longer than the first distance.

5. The device of claim 1, wherein the physiological parameter comprises a heart rate.

6. The device of claim 1, wherein the sensor comprises an optical heart rate sensor.

7. The device of claim 1, wherein the sensor comprises an accelerometer.

8. The device of claim 1, wherein the comparison of the first value for the physiological parameter to the second value for the physiological parameter accounts for demographic information of the user.

9. The device of claim 8, wherein the demographic information includes a user sex, weight, age, and height.

10. The device of claim 1, wherein the calibration is automatically initialized when the user puts on the device.

11. The device of claim 1, wherein the calibration is manually initialized.

12. A computer-implemented calibration method comprising:

receiving first sensor data from a sensor device located at a first location along a user's arm, wherein the sensor is positioned directly over or on a user's arm without intervening materials located between the sensor and the user's arm;

calculating, using the first sensor data, a first value of a physiological parameter for a user;

instructing the user to perform a specific activity configured to trigger a known tension within a specific muscle within the arm at the first location;

receiving second sensor data from the sensor during the specific activity;

calculating, using the second sensor data, a second value of the physiological parameter for the user; and

comparing the first value of the physiological parameter to the second value of the physiological parameter,

wherein if the first value for the physiological parameter is within a threshold range of the second value for the physiological parameter, communicating a notification to the user that a calibration is complete, and

wherein if the first value for the physiological parameter is outside of a threshold range of the second value for the physiological parameter, instructing the user to reposition the sensor device to a second location on the arm.

13. The method of claim 12, wherein the specific activity is configured to cause movement to trigger a known tension within a specific muscle of the user's forearm.

14. The method of claim 12, wherein the first sensor data is associated with a period of rest for the user.

15. The method of claim 12, wherein the physiological parameter comprises a heart rate.

16. The method of claim 12, wherein the comparison of the first value for the physiological parameter to the second value for the physiological parameter accounts for demographic information of the user.

17. A non-transitory computer-readable medium comprising computer-executable instructions, that when executed by a processor are configured to cause the processor to:

initialize a sensor calibration process, comprising:

receiving first sensor data from a sensor device aligned at a first orientation that is directly on or over the arm of the user at a first location;

calculating, using the first sensor data, a first value of a physiological parameter for a user;

instructing the user to perform a specific activity configured to trigger a known tension within a specific muscle within the arm at the first location;

receiving second sensor data from the sensor during the specific activity;

calculating, using the second sensor data, a second value of the physiological parameter for the user; and

comparing the first value of the physiological parameter to the second value of the physiological parameter,

wherein if the first value of the physiological parameter is within a threshold range of the second value of the physiological parameter, communicating a notification to the user that a calibration is complete, and

wherein if the first value of the physiological parameter is outside of a threshold range of the second value of the physiological parameter, instructing the user to reposition the sensor device such that it is at least one of: aligned at second orientation or at a second location on the arm of the user.

18. The non-transitory computer-readable medium of claim 17, wherein the specific activity is configured to cause movement to trigger a known tension within a specific muscle of the user's forearm.

19. The non-transitory computer-readable medium of claim 17, wherein the physiological parameter comprises a heart rate.

20. The non-transitory computer-readable medium of claim 17, wherein the comparison of the first value for the physiological parameter to the second value for the physiological parameter accounts for demographic information of the user.

* * * * *

| | | | |
|---|---|---|---|
| 专利名称(译) | 带可拆卸模块的运动带 | | |
| 公开(公告)号 | US9578903 | 公开(公告)日 | 2017-02-28 |
| 申请号 | US14/946729 | 申请日 | 2015-11-19 |
| [标]申请(专利权)人(译) | NIKE，Inc. | | |
| 申请(专利权)人(译) | NIKE，INC. | | |
| 当前申请(专利权)人(译) | NIKE，INC. | | |
| [标]发明人 | COBBETT JAMIAN R<br>JUDGE MONICA<br>SCHNEIDER SUMMER<br>MANESH ARIANA<br>QUAY SIMON<br>WEBB BILL<br>FITZGERALD QUINN<br>WATT RUSS | | |
| 发明人 | COBBETT, JAMIAN R.<br>JUDGE, MONICA<br>SCHNEIDER, SUMMER<br>MANESH, ARIANA<br>QUAY, SIMON<br>WEBB, BILL<br>FITZGERALD, QUINN<br>WATT, RUSS | | |
| IPC分类号 | A61B5/024 G06F19/00 B29C65/78 B29C65/00 A41H43/04 B29C65/52 B29C65/02 A41D27/20 G06F1/16 G06F3/01 G06F3/02 G08B6/00 A61B5/11 A61B5/00 A61B5/0205 A41D1/00 A63B24/00 A41D20/00 A45F5/00 B29L29/00 B29L31/48 | | |
| CPC分类号 | A41D1/005 A41D1/002 A41D20/00 A41D27/205 A41H43/04 A61B5/0205 A61B5/4866 A61B5/681 A61B5/6804 A61B5/6807 A61B5/6824 A61B5/6831 A61B5/7207 A61B5/7221 A63B24/0062 B29C65/02 B29C65/52 B29C65/7832 B29C66/4324 B29C66/71 B29C66/729 G06F1/163 G06F3/016 G06F3/0227 G06F19/3481 G08B6/00 A45F2200/05 A61B5/02416 A61B5/1118 A61B2503/10 A41D2300/52 A45F2005/008 A61B2560/0223 B29K2623/06 B29K2913/00 B29K2995/0046 B29L2029/00 B29L2031/48 A45F5/00 A61B5/7455 G16H20/30 G16H40/67 A61B5/002 A61B5/0022 A61B5/0024 A61B5/02438 A61B5/7278 A61B5/742 G01C21/3697 A61B2562/0219 G06F19/00 G16H20/40 | | |
| 代理机构(译) | BANNER＆WITCOFF.，LTD. | | |
| 审查员(译) | JACKSON，GARY | | |
| 优先权 | 62/215497 2015-09-08 US<br>62/168357 2015-05-29 US<br>62/168502 2015-05-29 US<br>62/146029 2015-04-10 US<br>62/100782 2015-01-07 US<br>62/082113 2014-11-19 US | | |
| 其他公开文献 | US20160135695A1 | | |
| 外部链接 | Espacenet USPTO | | |

摘要(译)
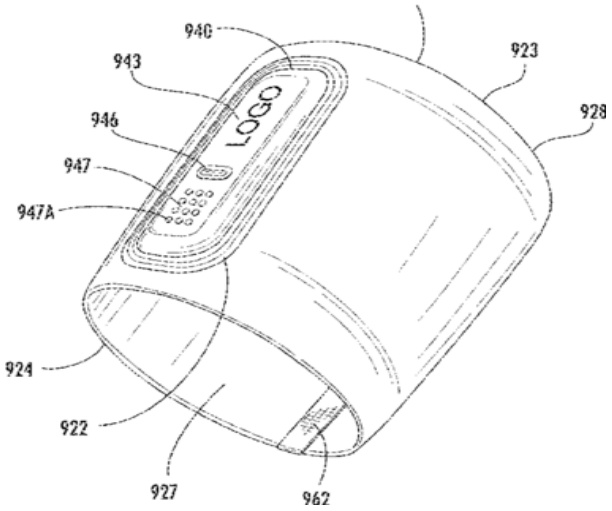
一种用于监测用户的运动活动的装置。在一个示例中，设备具有传感器，并且使用从传感器接收的数据执行校准过程以确定设备在用户上的正确定位。