US009713447B2

(12) **United States Patent**
Caduff et al.

(10) **Patent No.: US 9,713,447 B2**
(45) **Date of Patent: Jul. 25, 2017**

(54) **DEVICE FOR DETERMINING THE GLUCOSE LEVEL IN BODY TISSUE**

(75) Inventors: **Andreas Caduff**, Zurich (CH); **Mark Stuart Talary**, Zurich (CH); **Francois Dewarrat**, Zurich (CH); **Daniel Huber**, Zurich (CH); **Gianluca Stalder**, Wildberg (CH)

(73) Assignee: **BIOVOTION AG**, Zurich (CH)

(*) Notice: Subject to any disclaimer, the term of this patent is extended or adjusted under 35 U.S.C. 154(b) by 1592 days.

(21) Appl. No.: **12/084,392**

(22) PCT Filed: **Nov. 10, 2005**

(86) PCT No.: **PCT/CH2005/000666**

§ 371 (c)(1),
(2), (4) Date: **Feb. 3, 2009**

(87) PCT Pub. No.: **WO2007/053963**

PCT Pub. Date: **May 18, 2007**

(65) **Prior Publication Data**

US 2009/0312615 A1 Dec. 17, 2009

(51) **Int. Cl.**
A61B 5/00 (2006.01)
A61B 5/053 (2006.01)
(Continued)

(52) **U.S. Cl.**
CPC ***A61B 5/6843*** (2013.01); ***A61B 5/0531*** (2013.01); ***A61B 5/14532*** (2013.01);
(Continued)

(58) **Field of Classification Search**
CPC A61B 5/0261; A61B 5/05; A61B 5/053; A61B 5/0531; A61B 5/0533; A61B 5/0537; A61B 5/1455; A61B 5/14532
(Continued)

(56) **References Cited**

U.S. PATENT DOCUMENTS

3,654,072 A 4/1972 Massa
4,509,531 A 4/1985 Ward
(Continued)

FOREIGN PATENT DOCUMENTS

DE 44 46 346 6/1996
DE 100 35 415 1/2002
(Continued)

OTHER PUBLICATIONS

M. Brischwein et al, "Functional cellual assays with multiparametric silicon sensor chips" *Lab Chip*, 2003, 3, 234-240.
(Continued)

Primary Examiner — Adam J Eiseman
(74) *Attorney, Agent, or Firm* — Ladas & Parry LLP

(57) **ABSTRACT**

The apparatus for the non-invasive glucose detection comprises an electrical detection device (**2**) for measuring the response of the tissue or blood to an electric field at low frequencies below 1 MHz and at high frequencies above 10 MHz. The former is primarily dominated by skin hydration and sweat, while the latter contains contributions from the current glucose level. Combining the two signals allows an increased degree of accuracy. The apparatus further comprises a force or acceleration sensor (**4**, **5**), which allows to detect the pressure of the apparatus against the skin and/or quick movements. Further sensor modules, such as a temperature sensor (**6**) or alternative perfusion sensor (**7**), improve the accuracy of the measured result.

12 Claims, 7 Drawing Sheets

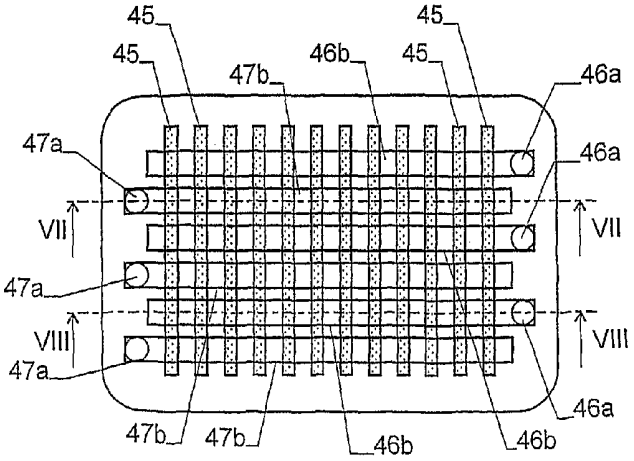

(51) **Int. Cl.**
A61B 5/145 (2006.01)
A61B 5/026 (2006.01)
A61B 5/11 (2006.01)

(52) **U.S. Cl.**
CPC *A61B 5/0261* (2013.01); *A61B 5/11* (2013.01); *A61B 5/721* (2013.01); *A61B 2560/0242* (2013.01); *A61B 2562/0219* (2013.01); *A61B 2562/0247* (2013.01)

(58) **Field of Classification Search**
USPC 600/316, 342, 366
See application file for complete search history.

(56) **References Cited**

U.S. PATENT DOCUMENTS

4,679,426	A	7/1987	Fuller	
4,765,179	A	8/1988	Fuller et al.	
4,875,486	A	10/1989	Rapoport et al.	
4,876,504	A	10/1989	Blake et al.	
5,050,612	A	9/1991	Matsumura	
5,072,732	A	12/1991	Rapoport et al.	
5,077,476	A	12/1991	Rosenthal	
5,119,819	A	6/1992	Thomas et al.	
5,353,802	A *	10/1994	Ollmar	600/547
5,508,203	A	4/1996	Fuller et al.	
5,771,891	A	6/1998	Gozani	
5,792,668	A	8/1998	Fuller et al.	
5,890,489	A	4/1999	Elden	
6,070,092	A	5/2000	Kazama et al.	
6,070,093	A	5/2000	Oosta et al.	
6,309,884	B1	10/2001	Cooper et al.	
6,356,776	B1	3/2002	Berner et al.	
6,442,408	B1	8/2002	Wenzel et al.	
6,487,906	B1	12/2002	Hock	
6,491,647	B1	12/2002	Bridger et al.	
6,517,482	B1	2/2003	Elden et al.	
6,565,509	B1	5/2003	Say et al.	
6,723,048	B2	4/2004	Fuller	
6,762,609	B2	7/2004	Alanen et al.	
6,763,256	B2 *	7/2004	Kimball et al.	600/336
6,841,389	B2	1/2005	Novikov et al.	
6,954,662	B2	10/2005	Freger et al.	
7,184,810	B2	2/2007	Caduff	
2002/0001202	A1 *	1/2002	Williams	A61B 17/02 362/572
2002/0106709	A1	8/2002	Potts et al.	
2002/0155615	A1	10/2002	Novikov et al.	
2003/0153821	A1	8/2003	Berner et al.	
2003/0181795	A1	9/2003	Suzuki et al.	
2003/0220581	A1	11/2003	Ollmar et al.	
2004/0039254	A1	2/2004	Stivoric et al.	
2004/0065158	A1	4/2004	Schrepfer et al.	
2004/0104736	A1	6/2004	Cohen et al.	
2004/0127780	A1	7/2004	Ollmar et al.	
2004/0133353	A1	7/2004	Geutebruck	
2004/0147819	A1	7/2004	Caduff et al.	
2004/0181141	A1	9/2004	Kislov et al.	
2004/0220485	A1	11/2004	Rytky	
2005/0043602	A1	2/2005	Freger et al.	
2005/0053523	A1	3/2005	Brooke	
2005/0070778	A1 *	3/2005	Lackey et al.	600/366
2005/0083992	A1	4/2005	Pesach	
2005/0101846	A1	5/2005	Fine et al.	
2005/0113662	A1	5/2005	Djennati et al.	
2005/0171415	A1	8/2005	Hirao	
2005/0187471	A1 *	8/2005	Kanayama et al.	600/437
2005/0192488	A1	9/2005	Bryenton et al.	
2005/0197555	A1	9/2005	Mouradian et al.	
2005/0203361	A1	9/2005	Caduff et al.	
2005/0203363	A1	9/2005	Caduff et al.	
2006/0025664	A1	2/2006	Kim et al.	
2006/0195022	A1 *	8/2006	Trepagnier et al.	600/316
2006/0264730	A1	11/2006	Stivoric et al.	
2007/0282180	A1	12/2007	Caduff et al.	
2008/0057526	A1	3/2008	Caduff et al.	

FOREIGN PATENT DOCUMENTS

GB	2 033 575		5/1980
GB	2 055 206		2/1981
GB	2 100 864		1/1983
JP	62-83649		4/1987
JP	9-201337		8/1997
JP	2000-162176		6/2000
JP	2001-500392	A	1/2001
JP	2004-298408	A	10/2004
RU	2 073 242		2/1997
RU	2 088 927		8/1997
WO	93/18395		9/1993
WO	93/18402		9/1993
WO	97/39341		10/1997
WO	98/04190		2/1998
WO	98/09566		3/1998
WO	99/44495		9/1999
WO	00/09996		2/2000
WO	01/26538		4/2001
WO	WO 01/26538	*	4/2001
WO	WO 02/069791	*	9/2002
WO	2004/016170	A1	2/2004
WO	2004/023125		3/2004
WO	2005/017642	A2	2/2005
WO	2005/053523		6/2005
WO	2005/053523	A1	6/2005
WO	2005/057168	A2	6/2005

OTHER PUBLICATIONS

Z. Wang et al, "Measurements of scattered light on a microchip flow cytometer with integrated polymer based optical elements" *Lab Chip*, 2004, 4, 372-377.

S. Gawad et al; "Micromachined impedance spectroscopy flow cytometer for cell analysis and particle sizing" *Lab on a Chip*, 2001, 1, 76-82.

S. Gawad et al; Dielectric spectrsocopy in a micromachined flow cytometer: theoretical and practical considerations *Lab Chip*, 2004, 4, 241-251.

English-language Examination Report dated Apr. 24, 2012 in respect of Application No. 10 015 557.1-2319.

English abstract of DE 100 35 415 dated Jan. 31, 2002.

English translation of Abstract and Description of DE 4446346 dated Jun. 27, 1996.

Patent Abstracts of Japan of JP 9-201337 dated Aug. 5, 1997.

Patent Abstracts of Japan of JP 2000-162176 darted Jun. 16, 2000.

Patent Abstracts of Japan of JP 62-083649 dated Apr. 17, 1987.

English Abstract of RU 2 073 242 dated Feb. 10, 1997.

English Abstract of RU 2 088 927 dated Aug. 27, 1997.

Tenhunen, J., et al. "Non-invasive glucose measurement based on selective near infrared absorption; requirements on instrumentation and spectral range." *Measurement 24* (1998) pp. 173-177.

Khalil, O.S. "Non-Invasive Glucose Measurement Technologies: An Update from 1999 to the Dawn of the New Millennium." *Diabetes Technology & Therapeutics* (2004) vol. 6, pp. 660-695.

Choleau, C., et al. "Prevention of Hypoglycemia Using Risk Assessment With a Continuous Glucose Monitoring System." *Diabetes* (2002) vol. 51, pp. 3263-3273.

Feldman, Y., et al. "Time domain dielectric spectroscopy: An advanced measuring system." *Rev. Sci. Instrum* (1996) vol. 67, No. 9, pp. 3208-3216.

Feldman, Y. D., et al. "Time domain dielectric spectroscopy. A new effective tool for physical chemistry investigation." *Colloid & Polymer Science* (1992) vol. 270, No. 8, pp. 768-780.

Mamishev, A.V., et al. "Uncertainty in Multiple Penetration Depth Fringing Electric Field Sensor Measurements." *IEEE Transactions on Instrumentation and Measurement* (2002) vol. 51, No. 6, pp. 1192-1199.

European Search Report dated Sep. 7, 2011 for Application No. EP 10015557.1-2319.

A. Caduff et al., First human experiments with a novel non-invasive, non-optical continuous glucose monitoring system, Biosensor and Bioelectronics 19 (2003), 209-217.

(56) **References Cited**

OTHER PUBLICATIONS

Japanese office action dated Apr. 26, 2011 in respect of Japanese Patent Application No. 2008-539204.
Espacenet English abstract of JP 2001-500392 A.
Espacenet English abstract of JP 2004-298408 A.

* cited by examiner

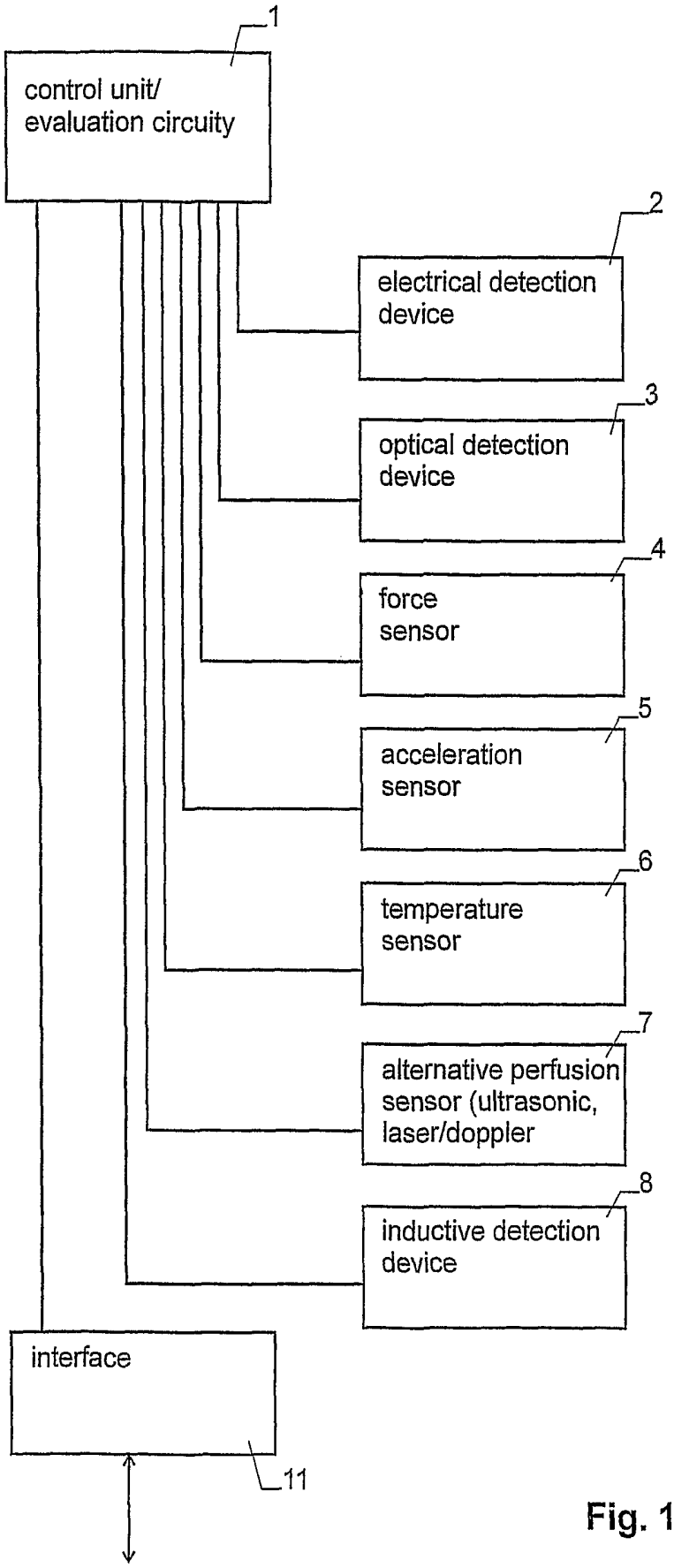
1
control unit/
evaluation circuity
2
electrical detection
device
3
optical detection
device
4
force
sensor
5
acceleration
sensor
6
temperature
sensor
7
alternative perfusion
sensor (ultrasonic,
laser/doppler
8
inductive detection
device
interface
11

Fig. 1

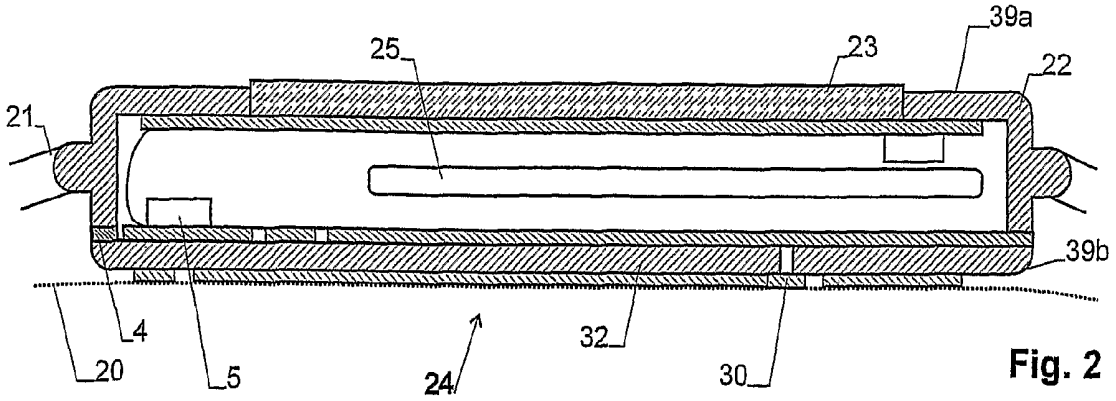

Fig. 2

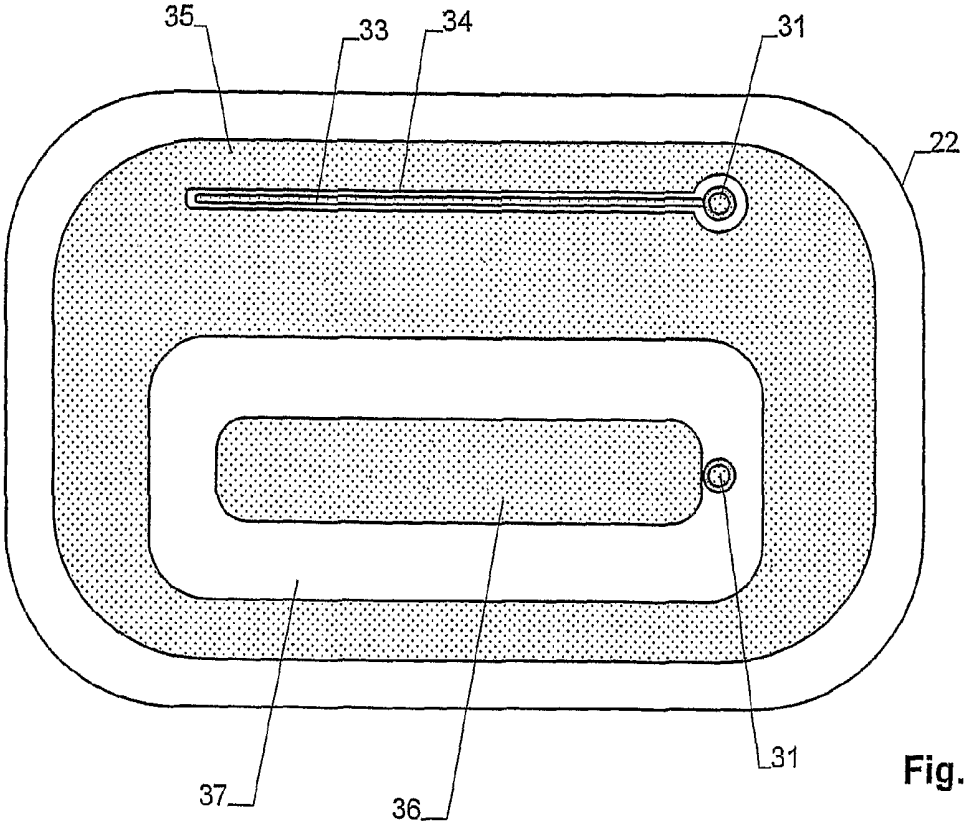

Fig. 3

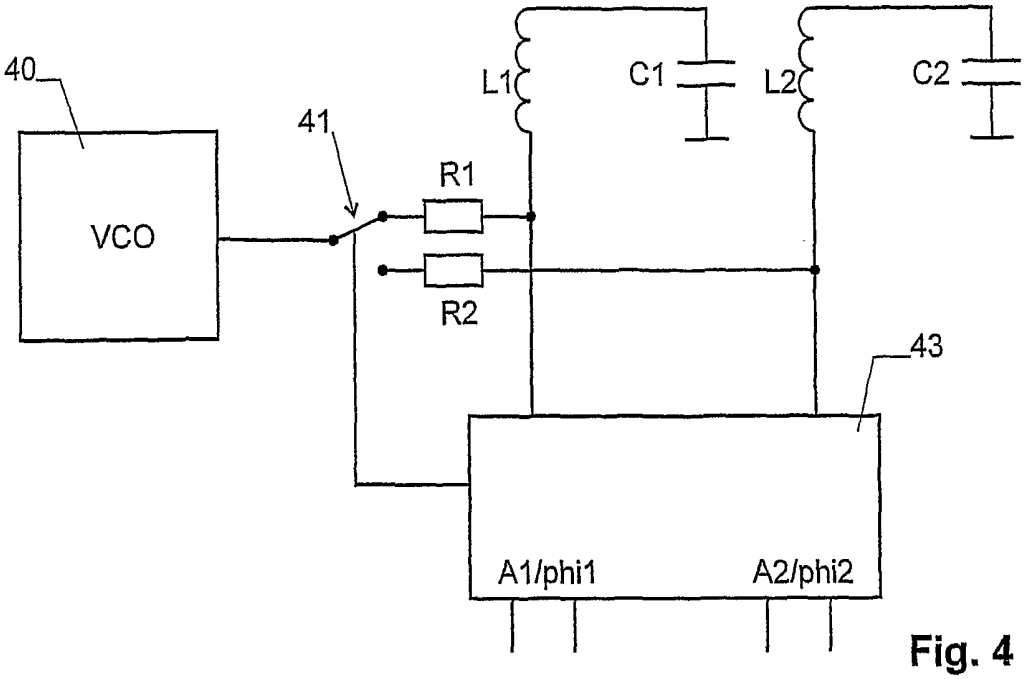

Fig. 4

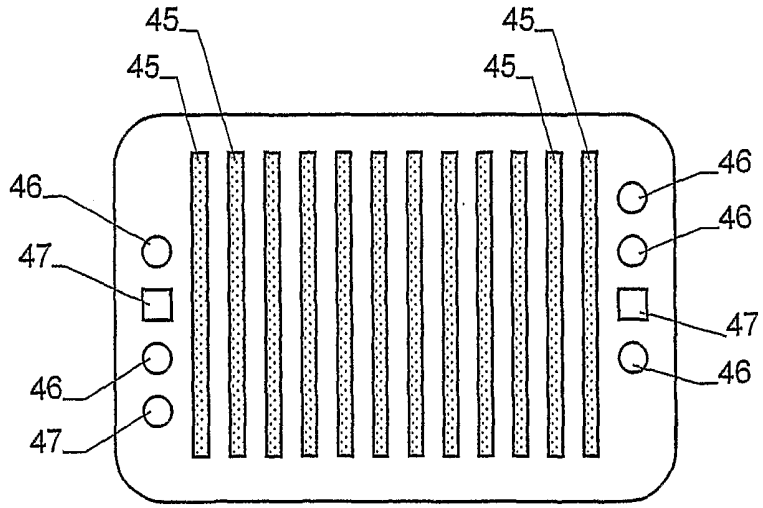

Fig. 5

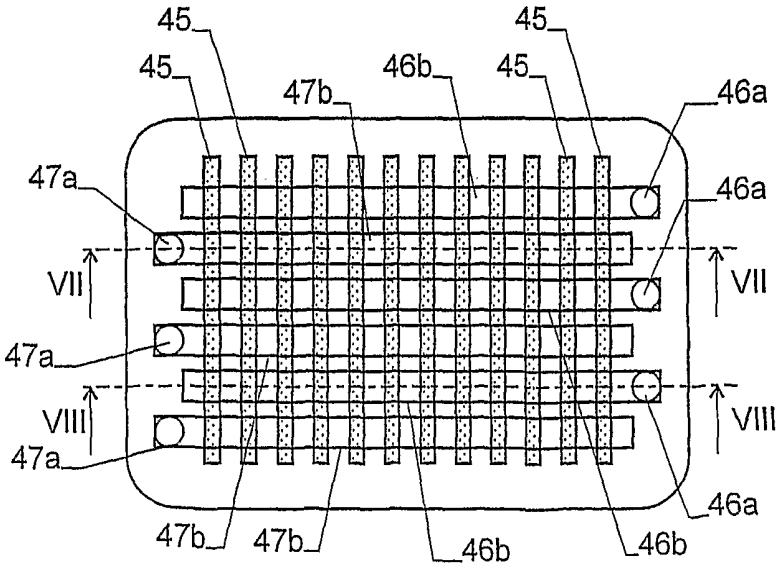

Fig. 6

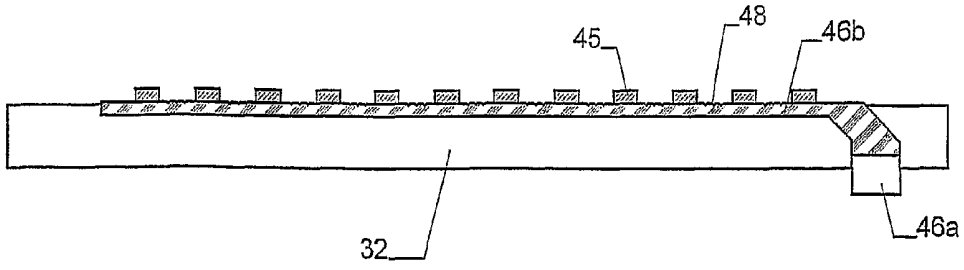

Fig. 7

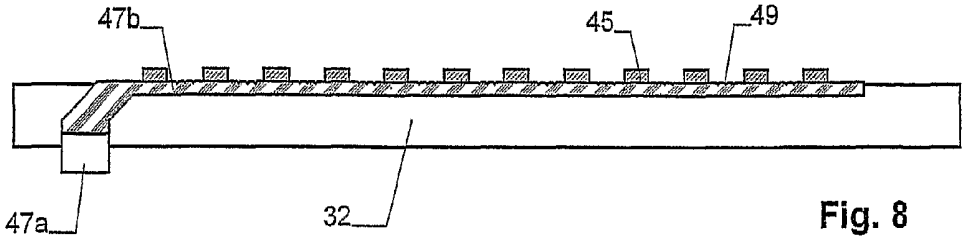

Fig. 8

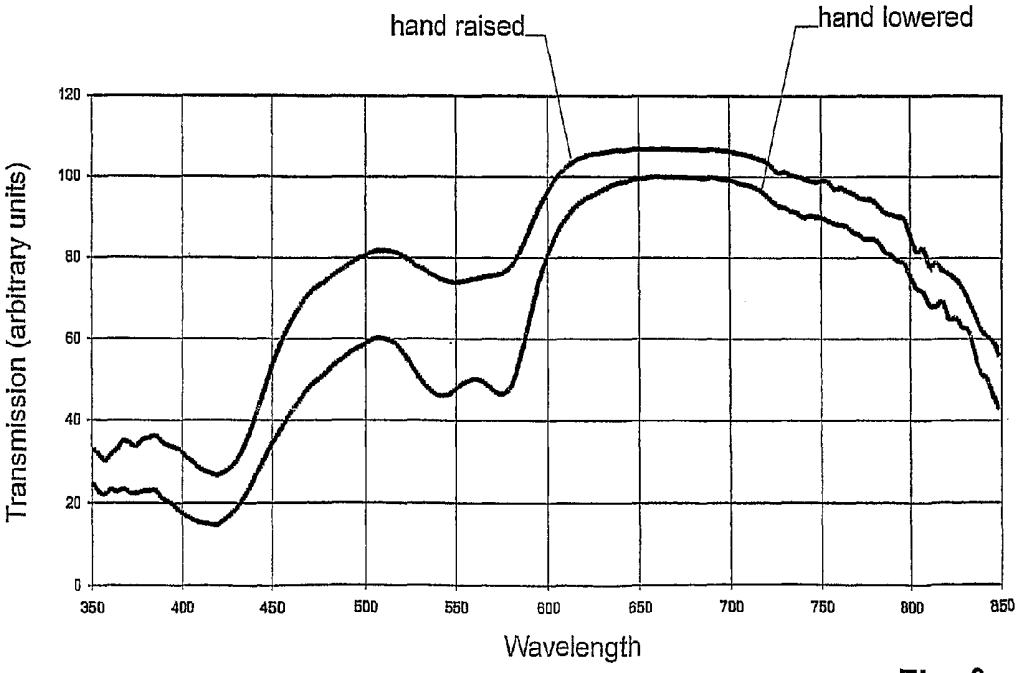

Fig. 9

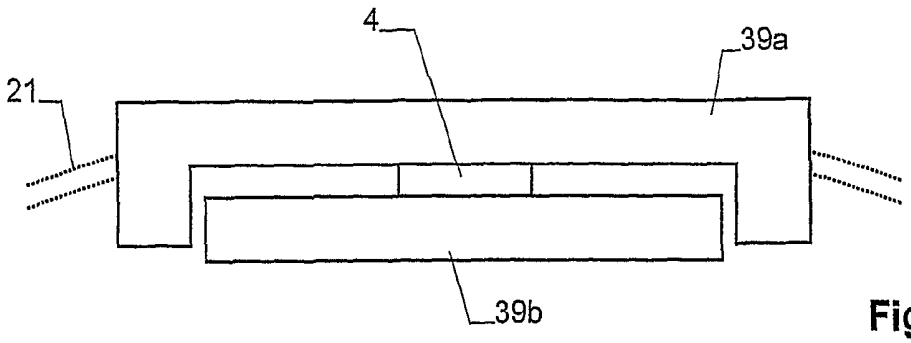

Fig. 10

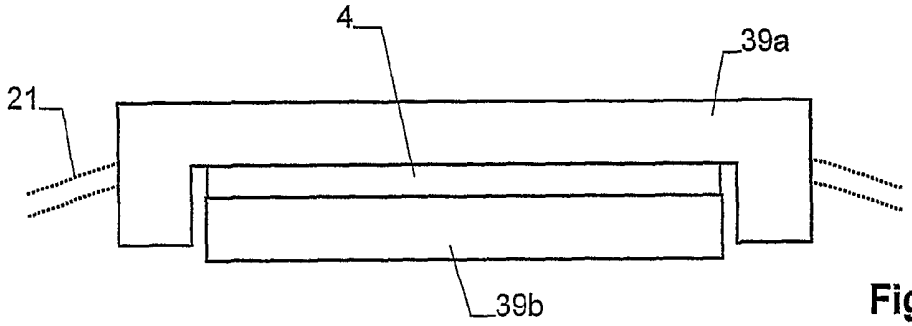

Fig. 11

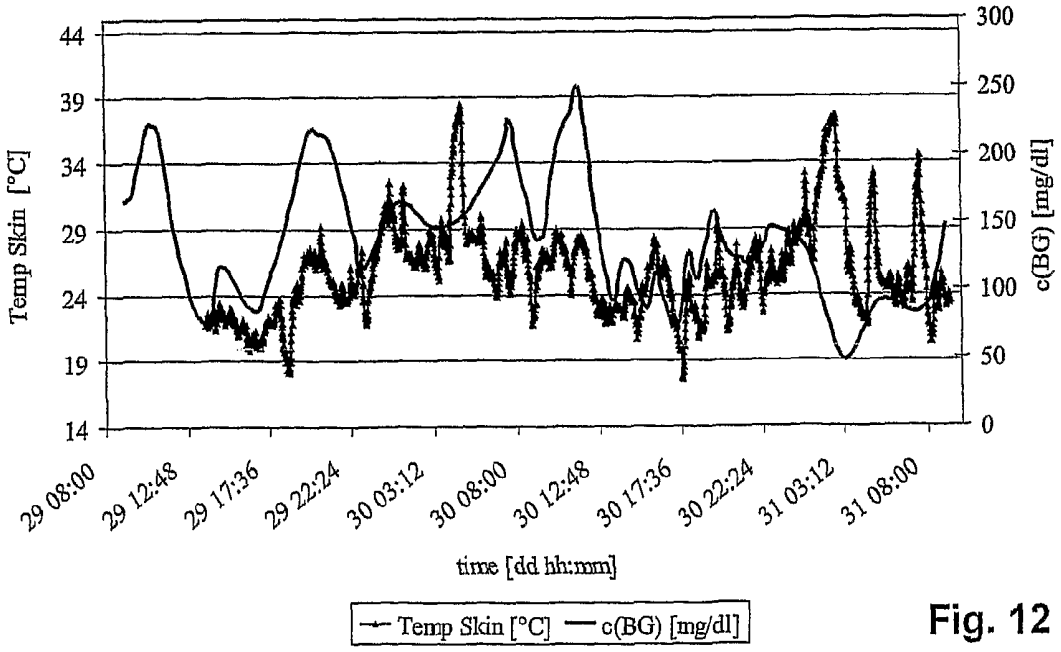

Fig. 12

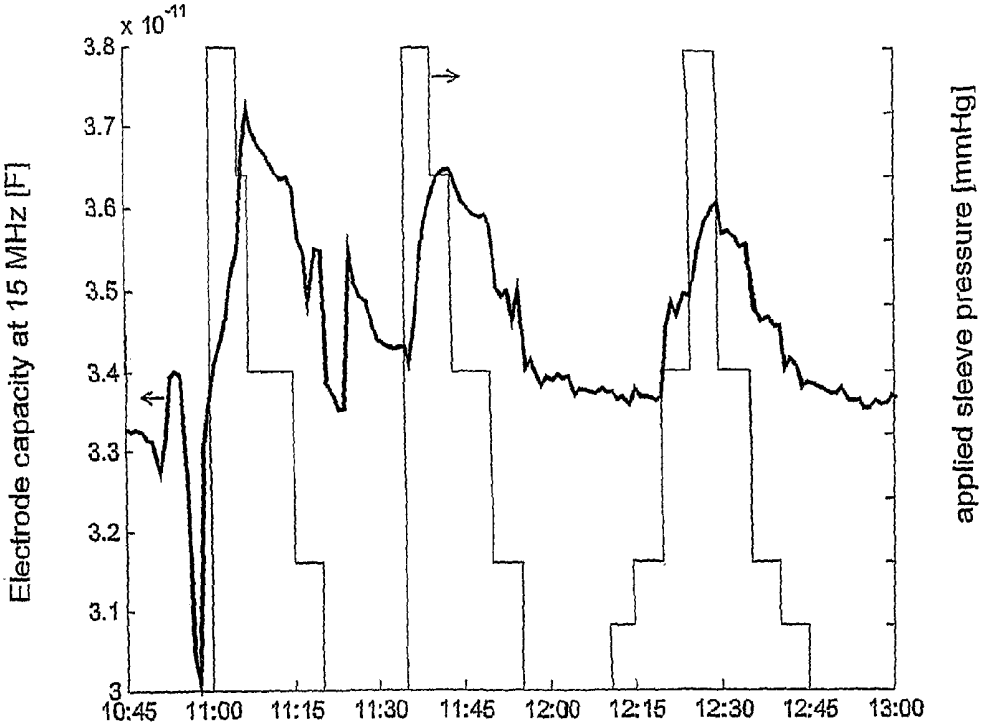
x 10^-11
3.8
3.7
3.6
3.5
3.4
3.3
3.2
3.1
3
Electrode capacity at 15 MHz [F]
applied sleeve pressure [mmHg]
10:45
11:00
11:15
11:30
11:45
12:00
12:15
12:30
12:45
13:00

Fig. 13

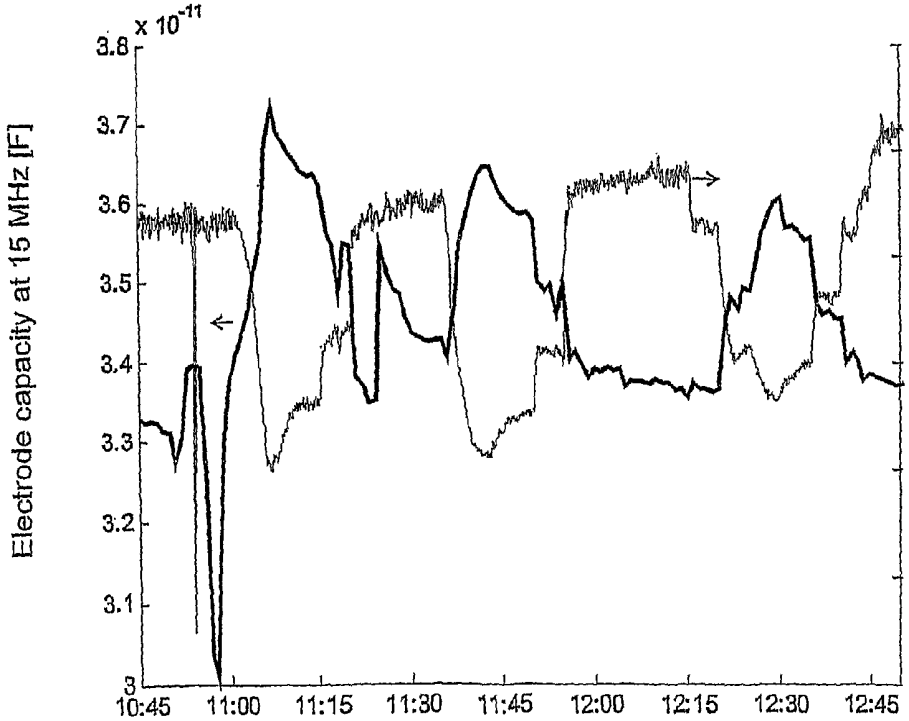
x 10^-11
3.8
3.7
3.6
3.5
3.4
3.3
3.2
3.1
3
Electrode capacity at 15 MHz [F]
10:45
11:00
11:15
11:30
11:45
12:00
12:15
12:30
12:45

Fig. 14

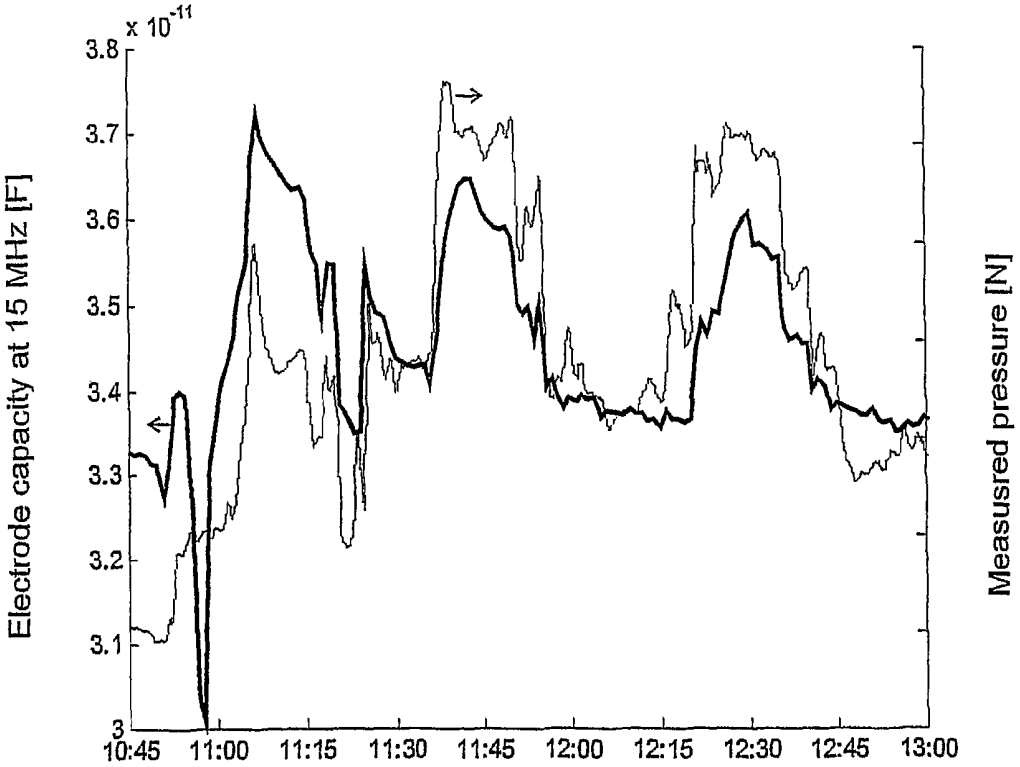
x 10^-11
3.8
3.7
3.6
3.5
3.4
3.3
3.2
3.1
3
Electrode capacity at 15 MHz [F]
Measusred pressure [N]
10:45
11:00
11:15
11:30
11:45
12:00
12:15
12:30
12:45
13:00

Fig. 15

DEVICE FOR DETERMINING THE GLUCOSE LEVEL IN BODY TISSUE

TECHNICAL FIELD

The present invention relates to the determination of glucose levels in body tissue/blood and various concepts for improving the accuracy of the same.

BACKGROUND ART

WO 2005/053523 and WO 2005/053526 describe various aspects of a non-invasive, in-vivo technique for determining the glucose level in body tissue. The technologies described in these documents do provide a reasonable degree of accuracy, but long-term accuracy can only be achieved using strict control of the parameters under which the measurement takes place, which may be undesirable in some situations.

DISCLOSURE OF THE INVENTION

Hence, it is a general object of the invention to provide ways to improve the accuracy of in-vivo non-invasive glucose determination.

This object is achieved by the means described in any of the independent claims.

According to a first aspect of the invention, an apparatus is described comprising an electrical as well as an optical detection device. The electrical detection device has an electrode arrangement which is suited to apply an electric field to the body tissue for measuring at least one first parameter describing a response of the tissue to said electric field. The optical detection device comprises a light source and a light receiver for measuring at least one second parameter describing a transmission or reflection of light by said tissue. The apparatus is further equipped with evaluation circuitry for determining the glucose level from a combination of the first and second parameters. By combining a parameter obtained from the electric field response and another parameter obtained from the optical response, it becomes possible to eliminate or, at least, reduce the dependence of the signal from the blood perfusion level in the tissue under study.

In a second aspect of the invention, the apparatus contains a detection device for non-invasively measuring a glucose parameter of the tissue, which glucose parameter depends on the glucose level. This detection device can e.g. be based on a dielectric measurement and/or an optical measurement. In addition to the detection device, the apparatus comprises a force sensor for measuring a force parameter indicative of the force by means of which said apparatus is pressed against the tissue as well as evaluation circuitry for determining the glucose level. This allows an increased accuracy since the parameters measured by non-invasive methods for glucose determination generally depend on the force by means of which the apparatus is pressed against the tissue. Hence, by measuring the force parameter, the result from the glucose parameter can be corrected and/or an alert can be issued if the apparatus is not properly pressed/attached against the tissue or a biophysical change has occurred in the body that causes a large increase in the applied pressure such as water retention, blood pressure change fluctuations.

In a third aspect, closely related to the second aspect of the invention, the apparatus comprises a detection device for non-invasively measuring a glucose parameter of the tissue depending on the glucose level. This detection device may again be based e.g. on a dielectric measurement and/or an optical measurement. The apparatus further comprises an acceleration sensor for measuring an acceleration of tie apparatus as well as evaluation circuitry for determining the glucose level. This combination of features is based on the understanding that during an acceleration of the apparatus/body (as it may e.g. occur when wearing the apparatus on an arm and moving the arm, the force by means of which the apparatus is pressed against the tissue varies, which either requires a correction of the measurement obtained from the detection device and/or a suppression of at least part of the functions of the apparatus and/or makes it advisable to issue an alert to the user. This can also indicate periods of time when there is a greater confidence of measuring changes associated with glucose rather than movement in the evaluation algorithm such as sleep, desk work or driving where limited movement is expected.

In a fourth aspect, the apparatus comprises an electrical detection device having an electrode arrangement for applying an electric field to the tissue. The detection device is adapted to measure

at least one first parameter at a frequency of the field above 10 MHz and

at least one second parameter at a frequency of the field below 1 MHz.

The apparatus further comprises evaluation circuitry for determining the glucose level from the combination of the first and the second parameter.

This is based on the understanding that the first parameter will depend on the glucose level as well as sweat, and the skin hydration while the second parameter primarily depends on skin hydration only. Hence combining the two parameters, e.g. using calibration data, allows to reduce the dependency of the result on skin hydration.

BRIEF DESCRIPTION OF THE DRAWINGS

The invention will be better understood and objects other than those set forth above will become apparent when consideration is given to the following detailed description thereof. Such description makes reference to the annexed drawings, wherein:

FIG. **1** is a block circuit diagram of an apparatus embodying the various aspects of the invention,

FIG. **2** is a sectional view of an embodiment of the apparatus,

FIG. **3** shows the layout of the electrodes of the embodiment of FIG. **2**,

FIG. **4** a possible circuit diagram for driving the electrodes of the embodiment of FIG. **3**,

FIG. **5** is a second embodiment of the layout of the electrodes, together with the arrangement of light sources and light detectors,

FIG. **6** is a third embodiment with a different arrangement of light sources and light detectors,

FIG. **7** is a sectional view along line VII-VII of FIG. **6**,

FIG. **8** is a sectional view along line VIII-VIII of FIG. **6**,

FIG. **9** shows the optical transmission at a fingertip for raised and lowered positions of the hand,

FIG. **10** shows a first possible arrangement of the force sensor,

FIG. **11** shows a second possible arrangement of the force sensor,

FIG. **12** shows skin temperature and glucose profile over several days in a patient with Type 1 diabetes,

FIG. **13** shows the dependence of the electrode capacity (fat line) at 15 MHz for different sleeve pressures (thin line),

FIG. **14** shows, for the experiment of FIG. **13**, the optical reflectivity (thin line) at 550 nm together with the electrode capacity (fat line), and

FIG. **15** shows, again for the experiment of FIG. **13**, the force measured by the force sensor (thin line) together with the electrode capacity (fat line).

MODES FOR CARRYING OUT THE INVENTION

1. Overview

FIG. **1** shows an overview of an embodiment of an apparatus illustrating the various aspects of the present invention.

As can be seen, the apparatus comprises a control unit and evaluation circuitry **1**, which can e.g. be implemented as a microprocessor, peripheral circuitry and software components suited for carrying out the various tasks described below. In addition, the apparatus comprises various sensor modules **2-8**:

- An electrical detection device **2** has electrodes for applying an electrical field to the tissue of the user and measures at least one parameter describing the response of said tissue to said electric field.
- An optical detection device **3** has a light source and a light receiver for measuring at least one parameter describing a transmission or reflection of light by the tissue.
- A force sensor **4** is designed to measure a force parameter indicative of the force by means of which the apparatus is pressed against the tissue or between the apparatus and underlying tissue or its distribution over a surface in the case of a flexible sensing element or measured tissue.
- An acceleration sensor **5** measures the acceleration (including deceleration) of the apparatus.
- A temperature sensor **6** (or, advantageously, several temperature sensors) are used to measure one or more temperature values. They are e.g. used to measure the temperature on the surface of the tissue, in the apparatus or of the environment.
- An alternative perfusion sensor **7** can e.g. be provided (in addition to or instead of some other sensor modules) for measuring a parameter depending on the level of blood perfusion of the tissue.
- An inductive sensor **8** can be used for measuring an inductive response of the tissue, i.e. the response of the tissue to an applied magnetic field.

This list of sensor modules is not exhaustive. The apparatus may also be equipped with other sensor modules that allow a (advantageously non-invasive) determination of a parameter that has an influence on the measured glucose level. Also, one or more of the sensor modules can be omitted if the corresponding parameter(s) is (are) to be ignored. Finally, some of the modules may be combined into one: For example, the force and acceleration sensors may be combined in a single module because both basically measure a force or a distribution of a force over a surface.

Finally, the apparatus is advantageously also equipped with an interface **11** for connecting the control unit **1** to external data processing and/or control circuitry.

In principle, the operation of the apparatus is as follows: Control unit/evaluation circuitry **1** operates the various sensor modules **2-8** (or part thereof) to measure a number of parameters that depend on the user's state (e.g. electric and optical response of the tissue), the state of the user's surroundings (e.g. ambient temperature), as well as on the state of the apparatus itself (e.g. the temperature within the apparatus). Evaluation circuitry **1** combines the various measured parameters, e.g. using multidimensional calibration data and/or algorithmic rules, to calculate a signal or display a value indicative of the glucose level.

A possible mechanical set-up of the apparatus is shown in FIG. **2**. The shown apparatus has approximately the shape and size of a wristwatch and can be worn on an arm or leg **20** by means of a wristband **21**. It has a housing **22** with a first housing part **39***a* and a second housing part **39***b*. A unit **23** is located at its front side and an electrode arrangement **24** at its backside. The interior of the housing provides space for the circuitry of the control unit and evaluation circuitry **1**, at least part of the various modules **2-8** as well as a battery **25**. It must be noted, though, that this is merely one advantageous example of a possible embodiment. Other designs can be used as well. For example, part or all of control unit and evaluation circuitry **1** may be arranged in a separate device connected to the apparatus of FIG. **2** by wirebound or wireless communication means.

Instead of using a wristband **21**, the apparatus can also be attached to the body by other means, such as adhesive tape.

In the following, the various parts of the apparatus of FIGS. **1** and **2** will be described in more detail.

2. Electrical Detection Device

Electrical detection device **2** serves to measure the response of the tissue to an electric field, which can e.g. be expressed in terms of the (complex) electrical impedance or in general dielectric characterization. The field is applied to the tissue by means of one or more electrode arrangements.

In the present embodiment, the impedance (or a value correlated to the same) for field frequencies above 10 MHz measured by the electrical detection device is the one measured parameter that has the strongest dependence on glucose or variations thereof of all measured parameters and is therefore also termed the "glucose parameter". If, however, in another embodiment, glucose is primarily determined by optical means, an optically measured parameter may be termed the "glucose parameter". The "glucose parameter" may also be obtained from a combination of various measurements, e.g. from a combination of optical and dielectric measurements.

Turning back to the present embodiment, the impedance measurement of the skin tissue can be made using a variety of sensors that can operate as stand alone devices or combined structures. They can be attached to multiple positions on the body to allow for the differences in the micro vascularisation of the tissue associated with the different regions to be examined. For example, since the degree of micro vascularisation increases as the blood vessels move towards extremities of the body (i.e. hands and feet) a greater relative sensitivity to dielectric changes in blood is achieved in such tissues. At the earlobes, for example, there is the advantage that they possess the greatest degree of blood perfusion for capacitively coupled measurements to be made, however there are obvious restrictions on the size of the tissue surface area available and the movement that occurs in such a position.

2.1 Differential Sensor

In an advantageous embodiment, the electrical detection device **2** comprises a differential sensor having several arrangements of electrodes that differ in their geometry. This is explained in the following.

The human skin can be seen as several corrugated parallel layers with various physical properties and biological functions. The dermis layer is the one with lightest blood perfusion, hence it is believed to be most sensitive to blood glucose changes. As it is situated below other layers (for

example epidermis and stratum corneum), a direct measurement of dielectric properties of the dermis layer is not possible with a non invasive sensor placed on the skin surface. The purpose of the differential sensor is then to achieve depth specific measurements in order to distinguish impacts of the various layers on the measurement of the whole volume under consideration.

The method that is chosen here uses multiple electrode arrangements with different geometries, e.g. different widths and separations. Generally speaking, the penetration depth of the signal increases with increasing electrode width and electrode separation. For a multilayer system, there is a maximum of sensitivity to the magnitude of the dielectric changes for each layer at different electrode widths and separations. Combining the results of the measurements from the different electrode arrangements allows to track contributions of the separate layers. Finite element modeling simulations of the electric potential distribution allow the geometry of the sensor to be optimized and to achieve maximum sensitivity to changes in the dielectric properties of the specific layers.

For example a sensor consisting of two arrangements of electrodes can be considered. One electrode arrangement is called short sensor. The small size and separation of electrode make it sensitive to changes in upper skin layers. The second set is called long sensor. The large size of the electrode and the large gap make it sensitive to deeper layers, in this case dermis.

FIG. **3** shows an example of such a sensor. The dotted areas represent the electrodes, the circles the contacts **31** through the base **32** that the electrode arrangements are mounted on.

The first electrode arrangement comprises a thin strip electrode **33** separated by a thin gap **34** from a base electrode **35**. The second electrode arrangement comprises a thicker strip electrode **36** separated by a thicker gap **37** from the base electrode **35**. In other words, the two electrode arrangements have a common first electrode, namely the base electrode **35**.

Base electrode **35** can e.g. be applied to ground, while the strip electrodes **33** and **36** carry an AC signal.

The first electrode arrangement is sensitive to the properties of the upper skin layers. The second electrode arrangement is larger and has larger distance to ground in order to be sensitive to the properties of a deeper skin layer, in this case dermis.

The circuitry for driving each of the electrode arrangements and retrieving signals therefrom may e.g. be the same as disclosed (for a single electrode arrangement) in WO 2005/053523, which is incorporated herein in its entirety by reference. However, part of that circuitry would have to be duplicated to drive the two electrode arrangements.

A possible design of the circuitry for driving the two electrode arrangements is shown in FIG. **4**. As can be seen, the circuitry comprises a (signal generating element) voltage controlled oscillator (VCO) **40**, which generates an AC voltage of variable frequency. The frequency can e.g. be set by control unit **1**. The signal from VCO **40** is fed to a switch **41**, which alternatively feeds it to either the first electrode arrangement (denoted by C**1**) or the second electrode arrangement (denoted by C**2**) via known resistors R**1**, R**2** and inductances L**1** and L**2**, respectively. For each path, the voltage at the point between the resistors (R**1** or R**2**) and the inductance (L**1** or L**2**) is fed to a measuring circuit **43**, which measures its phase phi**1** or phi**2** as well as its amplitude A**1** or A**2**. These measured signals are further processed in the control unit and evaluation circuitry **1**.

It must be noted that the circuit shown in FIG. **4** is merely one of many possible embodiments of such a circuit. In particular, the measurement may also be carried out in the time domain (e.g. using short pulses), e.g. with subsequent Fourier analysis. Such a device has been described in WO 04/021877.

Further processing of the signals will, in general terms, comprise the step of comparing the signals obtained by the two electrode arrangements, e.g. by calculating a difference or ratio of the amplitudes, potentially after weighing the signals with suitable weights.

A general algorithm and method of calibration to be used for evaluating the signals of the electrical detection device **2** (and, in fact, for the signals of all measurement modules **2-8**) is described in WO 2005/053526.

In an alternative embodiment, the layout of FIG. **3** could be replaced by a design where the first and second electrode arrangements have a larger extent of spatially overlapping fields, e.g. by using three or more adjacent strip electrodes between ground electrodes, wherein the central strip electrode is either applied to ground (for forming the first electrode arrangement) or to the same signal as the other strip electrodes (for forming the second electrode arrangement). Switch **41** would in that case be replaced by a suitable array of switching allowing to connect individual strip electrodes either to ground or to the signal from VCO **40**. The apparatus would be operated to carry out a measurement for each electrode arrangement and then compare the two results.

An electrode design consisting of parallel strip electrodes will also be shown in the next section.

The frequency of the signals used in the differential sensor is advantageously above 10 MHz, e.g. in the range of some ten MHz up to several GHz. As described in WO 2005/053523, measurements in this frequency range are particularly sensitive to the glucose concentration or variations thereof.

2.2 Moisture and Sweat Sensor

The present apparatus can further comprise a moisture/sweat sensor that measures the sweat (surface water content) of the skin. This is an import parameter that affects the dielectric and electric response of the skin without being a direct measure of the glucose content. Hence, a more accurate knowledge of the skin hydration and sweat allows to obtain a more accurate result.

Advantageously, the skin hydration is also measured by the electrical detection device, since it strongly affects the electrical properties of the skin.

For measuring skin hydration, the electrical detection device can either use the same electrodes as for measuring the electric and dielectric response of the tissue as the primary glucose sensor (i.e. the differential sensor in the present embodiment), or it can use separate electrodes. In both cases, it measures the impedance between the electrodes.

The impedance measurement is based on a capacitance measurement of a dielectric medium similar to the differential sensor but is carried out at much lower frequencies, advantageously at a fixed frequency below 10 MHz, in particular below 1 MHz, or using a wide frequency sweep at signal frequencies in the range of 1 kHz-10 MHz. Equivalently, a single pulse with frequency contributions in this range can be used, advantageously with subsequent digital and/or analog filtering for frequencies outside the range. Any change in the dielectric constant due to skin surface hydration variation alters the capacitance of a precision measuring capacitor. The measurement can detect even

slightest changes in the hydration level. The reproducibility of the measurement is very high and the measurement time is very short (1 s). When using closely spaced, small electrodes, the measurement depth can be very small (100 μm). It can be varied depending on the sensor geometry. The resistance of the skin surface at low frequencies is measured. This type of measurement is similar to the widely used Galvanic Skin Response (GSR) detection.

Advantageously, two measurements are carried out. A first one is carried out at preferably between approximately 1 kHz and 100 kHz to provide a first parameter, a second one preferably between approximately 100 kHz and 1000 kHz to provide a second parameter. The first measurement at approximately 1 kHz has been found to depend primarily on surface sweat, whereas the measurement at and above 100 kHz is primarily due to the hydration of lower skin layers. By measuring at both frequencies, a better knowledge of the system can be gained.

2.3 Signal Generation

Generating the various signals used by the electrode arrangements of electrical detection device **2** is straightforward. Depending on the frequency and frequency range, the signal voltages may be produced in simple LC- or microwave oscillators, oscillators controlled by a phase locked loop (PLL) and associated circuitry (i.e. mixers, frequency dividers, superposition of a number of signal frequencies etc.) or through direct digital synthesis (DDS, sometimes termed NCO—numeric controlled oscillator). All these systems are able to produce frequencies from zero up to about 100 GHz. Signal sources are available commercially from a plethora of vendors, either as electronic parts or as complete assembled and tested units.

Key parameters for such signal sources are frequency range, frequency and amplitude stability. For portable devices power consumption is also a very important figure.

Measurements can be carried out in a frequency range between some kHz up to and exceeding 350 GHz. Sometimes more than one electrode arrangement may be used for one frequency or a range of frequencies. Also different electrode arrangements may be positioned differently with respect to the tissue region of interest.

2.4 Conclusion

As described, the electrical detection device **2** measures at least two parameters. The first parameter describes the response of the tissue to a field generated by the electrode arrangement at a frequency of the field above 10 MHz. The second parameter describes the response of the tissue to the field generated by the electrode arrangement at a frequency of the field below 1 MHz. Since the first parameter depends strongly on glucose, but also on skin hydration, while the second parameter depends primarily on skin hydration, combining the two in evaluation circuitry **1** allows to decrease the dependence on skin hydration.

3. Optical Detection Device

Optical detection device **3** is primarily aimed at determining and quantifying changes in blood flow and the perfusion characteristics in a defined volume of skin and underlying tissue or generally to allow generating a measure for perfusion and volume fraction changes in the spatial volume under study. There are many factors associated with physiological changes of the body that can change the blood perfusion level in the skin tissue. A sensor that combines an optical detector with the signals from electrical detection device **2** has the added advantage that an independent measure of blood volume and flow can be used to account for corresponding variations of the signal from the electrical detection device **2**. It is useful to have different measures of such perturbing factors for compensation purposes

The sensor aims to measure blood flow and perfusion so that this additional parameter can be extracted and used to compensate the influence of changes in microvascular flow. In addition, the signal can serve as an additional parameter to improve the accuracy of the apparatus.

Implementations of optical detection device **3** include a light source, e.g. in the broadband visible spectrum, combined with a light detector to measure reflectance and/or absorbance of the radiation by the tissue volume. The separation distance between the transmitter and receiver can determine the volume of skin tissue being monitored and the depth of penetration of the incident waves. Large separation tends to allow for greater sensitivity of the sensor at greater penetration depths. The light source can be incorporated into the apparatus or driven from an external source by using optical waveguide technology to determine the exact transmission path of the radiation within the tissue. Similarly the radiation can be sensed directly by discrete components in the apparatus itself, or be extracted via the waveguide system to an external sensor.

Variation in penetration depth measurement within an integrated sensor structure can be achieved by a combination of multiplexing the input and output signals from the waveguide structure for example, to vary the separation distance between the illuminated waveguide and the receiving waveguide. The optical detection device could e.g. comprise an external light source and detection system coupled to the waveguide via an optical waveguide, or could integrate the light source into the sensor apparatus itself, e.g. by using light emitting polymers in the fabrication of the sensor. The opto-active polymers can form the supporting structure of the electrode arrangements of electrical detection device **2**, which has the advantage that this would enable the direct coupling of the two measured signals into the same tissue volume. The sensing component of the sensor can consist of a single photodiode element or an array of sensing elements that can also be used to reveal change in reflection characteristics of the underlying tissue according to varying penetration depth or the distribution characteristics over the measured surface.

The light source can generate narrowband light or a multitude of specific spectral bands chosen to match the absorption and reflection characteristics of the underlying tissue and fluids, or include a broadband spectrum. In the example of a CCD array, a broad spectrum response could be achieved combined with spatial separation information.

A specific embodiment of the optical detection device **3** together with an arrangement of strip electrodes **45** (as an alternative to the arrangement of FIG. **3**) is shown in FIG. **5**.

As mentioned above, the strip electrodes **45** can e.g. be operated in a first electrode arrangement where the even electrodes are applied to ground and the odd electrodes to the signal and in a second electrode arrangement where the first two electrodes are applied to ground, the second two electrodes to the signal, the third two electrodes to ground, etc.

As can be seen, the apparatus of FIG. **5** further comprises a number of light sources **46** associated with light detectors **47**. For example, two or three light sources **46** can be arranged in close proximity to a light detector **47**, which allows to use light sources of different wavelength and/or light sources at different distances from the light detectors.

The light sources **46** can e.g. be light emitting diodes and the light detectors can e.g. be photodiodes.

Another embodiment of the apparatus is shown in FIGS. **6-8**. It again comprises a plurality of parallel strip electrodes **45** and is equipped with light sources and light detectors. In this case, however, the light sources are located below the electrode arrangement and transmit their light through the electrode arrangement, namely through the gaps between the adjacent strip electrodes **45**. The light detectors are also located below the electrode arrangement and receive light reflected from the tissue and transmitted through the electrode arrangement.

Each light source comprises, in this embodiment, a light emitter **46***a* and a waveguide **46***b*. The light source is arranged to emit its light into the waveguide **46***b*, while the waveguide is provided with surface gratings or roughed areas **48** in the gaps between the strip electrodes **45**, which decouple the light from the waveguide **46***b* and emit it into the tissue.

Similarly, each light detector comprises a light sensor **47***a* and a waveguide **47***b*. The waveguide **47***b* is substantially of the same design as the waveguide **46***b* and has surface gratings or roughed areas **49** in the gaps between the strip electrodes **45**. Light reflected from the tissue is scattered on the gratings or roughed areas **49** and coupled into the waveguide **47***b*, from where it is projected onto light sensor **47***a*.

In the embodiment of FIGS. **6-8**, the electrode assembly is substantially planar with a first surface facing the tissue and a second surface facing away from the same. The waveguides **46***b* and **47***b* are located at the second surface.

Instead of using waveguide light detectors as shown in FIG. **8**, a CCD camera can be arranged below the electrodes, which allows to receive a spatially resolved image of the reflected light for better interpretation of the data.

3.1 Wavelength

As mentioned, the main purpose of the optical detection device **3** is to give a measure of the blood perfusion of the tissue. To analyze the wavelengths that allow a sensitive measurement of the perfusion, an experiment was performed using a micro spectrometer with a scanned frequency range from 850 nm to 350 nm (Böhringer Ingelheim Microparts GmbH, Dortmund, Germany). Transmission at the finger tip was measured with different positions of the hand (raised and hanging down) to induce changes in the perfusion characteristics. A respective graph is presented in FIG. **9**.

Wavelengths in the range of 450 to 800 nm, in particular of 550 and 700 nm, have been identified to allow the most efficient blood perfusion measurements of the upper and lower dermal vascular bed including bigger blood vessels.

It is known that NIR light can be used as well to monitor perfusion characteristics in deeper underlying tissues (muscle/fat layers etc), while the green wavelength (550 nm) is more characteristic for absorbance by blood and hence changes in the microvascular system.

Using combinations of measurements at several wavelengths and/or for several separations allows to refine the data on the perfusion characteristics from various dermal and generally tissue layers. Differences in temporal responses in different depths can also be extracted.

In one advantageous embodiment, measurements preferably at least in two wavelengths are carried out, one in the visible range of the spectrum (450 nm to 800 nm) and one in the near infrared (800 nm to 10 μm).

4. Force Sensor, Acceleration Sensor

The force and acceleration sensors are aimed at determining and/or quantifying the magnitude of changes in the response of electrical detection device **2** (or other sensor modules) caused by physical movements of the tissue being monitored or caused by a change of the pressure between the apparatus and the tissue.

One possible embodiment of a force sensor is shown in FIG. **2**. In this embodiment, the lower housing part **39***b*, namely base **32** resting against the tissue, is suspended on the upper housing part **39***a* on one side only, while a piezoelectric force sensor **4** is arranged between its other end upper housing part **39***a*. An increase of the pressure of upper housing part **39***a* towards the tissue will lead to an increase of the force that is measured by force sensor **4**.

The force measured by force sensor **4** is also a measure of the force exerted by wristband **21**. An additional or alternative force sensor could also be applied to wristband **21** directly.

Advantageously, as in FIG. **2**, housing **22** comprises a first housing part **39***a* and a second housing part **39***b*. The wristband is attached to the first housing part **39***a* and the force sensor is adapted to measure the force between the two housing parts.

Alternative embodiments where the force sensor **4** is attached between a first housing part **39***a* and a second housing part **39***b* are shown schematically in FIGS. **10** and **11**. In both cases, first housing part **39***a* is connected to wristband **21**, while second housing part **39***b* carries the non-invasive glucose detector, e.g. the electric detection device **2**.

In the embodiment of FIG. **10**, force sensor **4** is a small load cell arranged at the center between the two housing parts while, in the second embodiment of FIG. **11**, force sensor **4** is an extended layer of pressure sensing material.

The pressure or force sensor **4** is aimed at determining and quantifying the magnitude of changes in the response of the apparatus associated with attachment and contact pressure of the apparatus on the tissue using e.g. the piezoelectric effect. The force sensor(s) can be incorporated into the housing of apparatus for measuring the changes in the force exerted on the tissue by the sensor relative the housing, or they measure the external force applied by the attachment of the device on the tissue. Such a measurement will provide a measure of the temporal changes in attachment pressure of the apparatus on the tissue related to movement and temporal physiological changes. Other implementations of such a sensor could include an indirect measurement of the pressure exerted by using electrostrictive materials integrated into the sensor substrate.

It is believed that blood flow in the skin has an influence on the measured signal in the apparatus. The force sensor can be used to detect if changes in the physical pressure of the apparatus on the tissue provides a disturbance to the measured impedance signal. It can provide an additional parameter that can be extracted and used to compensate for changes in the applied pressure and thus serve as an additional parameter to improve the accuracy of the apparatus, and/or it can provide a means for detecting unsuitable measurement conditions.

Instead of, or in addition to, a simple force sensor **4**, an acceleration sensor **5** can be mounted in housing **22** (e.g. in the position indicated in FIG. **2**) to measure the amount and direction of acceleration experienced by the apparatus and tissue.

Both velocity and direction information can be established as well as the rate of change of these parameters to indicate what physiological changes might be occurring in the measured tissue.

It is believed that blood flow in the skin has an influence on the measured signal in the apparatus. The force and/or

acceleration sensors can be used to measure whether physical movement at the time when tissue measurements are being made are influenced by changes in the blood flow. The force and/or acceleration sensors can therefore provide an additional parameter to compensate for the influence of changes in microvascular flow and thus improving the accuracy of the apparatus.

The control unit/evaluation circuitry **1** is adapted to determine the glucose concentration from a combination of the parameter measured by the electrical detection device **2** and the signal from force sensor **4** and/or the acceleration sensor **5** as well as from the other sensor modules.

In an advantageous embodiment, the apparatus is adapted to suppress at least part of its operation and/or issue an alert if fluctuations of the signal from force sensor **4** or the signal from acceleration sensor **5** exceed a given threshold. In particular, the measurement can be interrupted, measured results can be ignored or the user can be advised if it is found that the forces vary too strongly or that the acceleration is too high.

5. Temperature Sensor

Temperature sensor **6** comprises one or more temperature detectors for measuring one or more temperature parameters.

Advantageously, several temperatures are measured. These include surrounding environmental temperature, the temperature within the apparatus and on the electrode arrangement, as well as the superficial skin temperature. These measurements can be made using a range of detectors including thermocouples or infrared radiation detection methods. Intradermal temperature variations could be evaluated by observing variations in the dielectric properties of the tissue at predefined depth in the gigahertz region where the dielectric properties are mostly influenced by the properties of water, see e.g. US 2005/0083992.

The graph presented in FIG. **12** shows a glucose profile of a type 1 diabetes patient together with skin temperature measured with a Pt 1000 element mounted on a sensor plate with skin contact. The patient was following regular daily activities and controlled his blood glucose with regular insulin injections according to measurements performed with an invasive blood glucose monitoring device. It has been reported before that various body temperatures, including skin temperature, can be used for glucose approximation in patients with diabetes. However, as can be seen from FIG. **12**, there is very little direct agreement between blood glucose measurements and skin temperature. In other words, if there were a correlation between the two parameters, it is highly perturbed by the influence of external temperature factors and its impact on skin temperature as well as body temperature, which is regulated according to temperature challenges introduced by the surrounding temperature. This effect is also reflected in changes in microvascular perfusion and has been studied in great detail by various groups. Hence there is a great interest to measure body temperatures including skin temperature for compensation of other glucose related signals, such as impedance or optical based glucose signals.

6. Inductive Detection Device

The inductive detection device **8** comprises at least one electric coil and a current source for generating a non-constant current therein. This current gives rise a magnetic field in the tissue, the response of which can be used to determine a parameter depending, inter alia, on glucose concentration. Suitable devices are described in EP1220638 or WO 04/028358. It can provide a further parameter depending on the glucose concentration and/or other relevant state variables of the tissue.

7. Ultrasonic Detector

The present apparatus can also comprise an ultrasonic detector. Such an ultrasonic detector, which measures the speed of sound in the blood or tissue, can provide further information on the glucose level, as e.g. described in WO 2005/017642.

8. Evaluation Circuitry

Evaluation circuitry **1** combines the signals of the sensor modules **2-8** to obtain a measure of the glucose level in the tissue. As mentioned, a general algorithm and calibration method to be used for evaluating the signals is described in WO 2005/053526, in particular in the sections "Calibration" and "Normal Operation" thereof, the disclosure of which is incorporated herein.

8.1 Improvements

In the following, we describe some refinements to the algorithm used by the evaluation circuitry of the apparatus to determine the glucose level. Basically, an advantageous algorithm can be divided up in two parts. For convenience, we refer to these two parts as the fundamental analysis and the technical analysis, respectively. The main part of the algorithm is the fundamental analysis that tales place in three steps.

The Three Steps Are:

1. Solution of the electromagnetic inverse scattering problem
2. Correction of the signal to eliminate perturbation effects
3. Transformation of the corrected signal into a glucose concentration.

Here, electromagnetic inverse scattering designates the mathematical method that transforms the scattered electromagnetic wave fields into information about the dielectric properties of the skin and underlying tissue, i.e., into information about the conductivities and permittivities characterizing the multi-layer skin system. Since, it is assumed that these dielectric properties are affected by a change of the glucose concentration, the conductivities and permittivities can be used as a measure of the glucose concentration, provided that the functional relation between the glucose concentration and the dielectric properties of the skin is known at least empirically.

However, the dielectric properties of the skin and underlying tissue are not only affected by the value and/or variations of glucose, but also by a variety of other effects, such as temperature variations, sweat variations, moisture migration in skin or changes in the blood microcirculation, perfusion characteristics, change of the tissue to sensor contact pressure, etc. Here, all effects and factors that are not in connection with the primary interaction between glucose and dielectric properties, i.e., with the primary detection process, are considered as perturbation effects. In the algorithm we distinguish between such perturbation effects and glucose effects, which then refer to effects that are related to the primary detection process. Accordingly, the conversion of the dielectric properties of the skin and underlying tissue into a glucose concentration is carried out in two steps. First, a compensation of the perturbation effects is carried out in step 2, so that the remaining variation observed in the dielectric parameters can be attributed, to a glucose change. The corresponding conversion of the corrected (i.e. compensated) dielectric parameters into a glucose concentration is then carried out in step 3.

In order to be able to carry out step 2 and 3 one has to determine the functional relation between the dielectric tissue parameters and the perturbation effects as well as the glucose effects.

Principally, this functional relation can be derived by means of a statistical procedure; namely, the well known multiple regression (see e.g. Hüsler & Zimmermann 2001).

The technical analysis is dedicated to the analysis of glucose time series. The goal is to identify patterns, regularities and statistical laws characterizing the evolution of the glucose concentration over time. These laws can then be used to make predictions about the glucose concentration in the near future based on the knowledge of the concentrations in the past. It is not expected that the technical analysis can make precise predictions, but it may be possible to narrow down the range of possible concentrations in the near future. Thus, the technical analysis has only a complementary and supportive character.

8.2 Calibration

Again, the basic calibration algorithm has been described in the section "Calibration" of WO 2005/053526 and is incorporated herein by reference. In the following, some improvements over that algorithm are described.

During the development phase of the algorithm, the data for the multiple regression analysis should be collected repeatedly for several subjects. Then, using the same general form of the regression model, the regression is carried out for each patient individually, so that an individual set of the free model parameter (regression parameters) is obtained for each subject. Applying the appropriate statistical significance tests, we check for each parameter if it significantly differs from subject to subject or from subject group to subject group. If no significant differences in the parameter sets are found one can operate with a global parameter set, i.e., with the mean built over all parameter sets. If some of the model parameters vary significantly from subject group to subject group, for each of these groups one has to determine the corresponding representative group parameter, which are simply obtained by averaging over the group members. Finally, if some of the parameters alter significantly from subject to subject, an individual calibration, (i.e. regression) has to be carried out for each subject in order to determine the corresponding individual parameters. An element of these calibrations may need to be dynamic as well to take into account biophysical cycles in the measured tissue. Also, if the apparatus is to be used during daily activities, at least part of the calibration parameters should also be recorded during such daily activities.

8.3 Further Experimental Data

FIGS. **13-15** show a single experiment where a tourniquet has been applied to a patient's upper arm while measurements with the electrical detection device **2**, the optical detection device **3** and the force sensor **4** were carried out. The pressure applied by the tourniquet is shown in FIG. **13**. The capacity measured by the electrical detection device is shown in all figures. The optical reflectivity is shown in FIG. **14** and the force measured by the force sensor is shown in FIG. **15**.

As can be seen, an increase of blood perfusion induced by the tourniquet affects all signals differently, which allows perfusion-related effects in the signals to be eliminated at least in part.

REFERENCES

1. American Diabetes Association, 1999. Clinical practice recommendations 1999, Diabetes Care 22:S77-S78.
2. The Diabetes Control and Complications Trial Research Group, 1993. The effect of intensive treatment of diabetes on the development and progression of long-term complications in insulin-dependent diabetes mellitus. N Engl J Med 329:977-986.
3. Shamoon, H., 2000. Continuous glucose monitoring: the next step towards closing the loop. Diabetes Technol Ther 2:57-59.
4. Bode, B W., Gross, T M., Thornton, K R., Mastrototaro, J J., 1999. Continuous glucose monitoring used to adjust diabetes therapy improves glycosylated haemoglobin: a pilot study. Diabetes Res Clin Prac 46:183-190.
5. Cheyne E., Kerr, D., 2002. Maling 'sense' of diabetes: using a continuous glucose sensor in clinical practice. Diabetes Metab Res Rev 18 (Suppl 1):S43-S48.
6. Khalil, O S., 2004. Non-invasive glucose measurement technologies: an update from 1999 to the dawn of the new millennium. Diabetes Technol Ther. October; 6(5):660-97.
7. Hoeber, R., 1910. Eine Metode, die elektrische Leitfaehigkeit im Inner von Zellen zu messen. Pfluegers Arch. Gesamte Physiol. Menschen Tiere. 133, 237.
8. Hoeber, R., 1910. Eine zweites Verfahren die Leitfaehigkeit im Inner von Zellen zu messen. Pfluegers Arch. Gesamte Physiol. Menschen Tiere. 133, 237.
9. Fricke, H., 1925. The electric capacity of suspensions with special reference to blood. J. Gen. Physiol. 9, 137-152.
10. Martinsen, Ø. G., Grimnes, S., Schwan, H. P., 2002. Interface phenomena and dielectric properties of biological tissue. Encyclopedia of Surface and Colloid Science, 2643-2652.
11. Schwan, H. P., 1957. Electrical Properties of Tissue and Cell Suspensions. In Advances in Biological and Medical Physics; Lawrence, J. H., Tobias, C. A., Eds.; Acad. Press: New York; Vol. V, 147-209.
12. Pethig R, Kell D B. The passive electrical properties of biological systems: their significance in physiology, biophysics and biotechnology. Phys Med Biol. 1987 August; 32(8):933-70.
13. Schwan H P., 1993. Mechanisms responsible for electrical properties of tissues and cell suspensions. Med Prog Technol.-94; 19(4):163-5.
14. Caduff A., Hirt E., Feldman Y., Ali Z., Heinemann L., 2003. First human experiments with a novel non-invasive, non-optical continuous glucose monitoring system. Biosensors and Bioelectronics 19: 209-217.
15. Alavi, S. M.; Gourzi, M.; Rouane, A.; Nadi, M.; 2003. An original method for non invasive glucose measurement: Preliminar results. 23rd Annual International Conference of the IEEE Engineering in Medicine and Biology Society, Istanbul; Turkey.
16. Gourzi M. et al., 2003. Study of a new electromagnetic sensor for glycaemia measurement. Journal of Medical Engineering & Technology. Number 627, 276-281.
17. Park, J H., Kim, C S., Choi, B C., Ham, K Y., 2003. The correlation of the complex dielectric constant and blood glucose at low frequency. Biosens Bioelectron. December 15; 19(4):321-4.
18. Fuchs K., Kaatze U., 2001. Molecular dynamics of carbohydrate aqueous solutions. Dielectric relaxation as a function of glucose and fructose concentration. J Phys Chem B 105:2036-2042.
19. Hillier, T A., Abbott, R D., Barrett, E J., 1999. Hyponatremia: evaluating the correction factor for hyperglycemia. Am J Med. April; 106(4):399-403.

20. Hayashi Y., Livshits L., Caduff A., Feldman Y., 2003. Dielectric spectroscopy study of specific glucose influence on human erythrocyte membranes. J Phys D: Appl Phys 36:369-374.

21. Caduff, A., Livshits, L., Hayashi, Y., Feldman, Yu.; 2004. Cell Membrane Response on d-Glucose Studied by Dielectric Spectroscopy. Erythrocyte and Ghost Suspensions. J Phys Chem B: 108, 13827-30.

22. Zavodnik, I B., Piasecka, A., Szosland, K., Bryszewska, M., 1997. Human red blood cell membrane potential and fluidity in glucose solutions. Scand J Clin Lab Invest. February; 57(1):59-63.

23. Roe, M W., Mertz, R J., Lancaster, M E., Worley, J F., Dules, I D., 1994. Thapsigargin inhibits the glucose-induced decrease of intracellular Ca2+ in mouse islets of Langerhans. Am J Physiol. June; 266(6 Pt 1):E852-62.

24. Pfutzner, A., Caduff, A., Larbig, M., Schrepfer, T., Forst, T., 2004. Impact of posture and fixation technique on impedance spectroscopy used for continuous and non-invasive glucose monitoring. Diabetes Technol Ther. August; 6(4):435-41.

Remark

While there are shown and described presently preferred embodiments of the invention, it is to be distinctly understood that the invention is not limited thereto but may be otherwise variously embodied and practiced within the scope of the following claims.

The invention claimed is:

1. An apparatus for determining a glucose level in body tissue or blood comprising

an electrical detection device having an electrode arrangement for applying an electric field to the tissue or blood for measuring at least one first parameter describing a response of said tissue or blood to said electric field,

an optical detection device comprising a light source and a light detector for measuring at least one second parameter describing a transmission or reflection of light by said tissue or blood, and

evaluation circuitry for determining the glucose level from a combination of said first and second parameter,

wherein the electrode arrangement comprises a plurality of parallel strip electrodes arranged to have gaps between each parallel strip electrode,

wherein said optical detection device is disposed behind the electrode arrangement such that the light source emits light through the gaps in said electrode arrangement and the light detector measures light transmitted through the gaps in said electrode arrangement for measuring said second parameter in a part of said tissue or blood experiencing said electric field.

2. The apparatus of claim **1** further comprising an AC voltage source for applying voltages of different frequencies to said electrode arrangement.

3. The apparatus of claim **1** wherein said optical detection device is adapted to determine said second parameter for at least a first and a second wavelength.

4. The apparatus of claim **3** wherein said first wavelength is in the visible spectrum.

5. The apparatus of claim **3** wherein said second wavelength is in the near infrared spectrum.

6. The apparatus of claim **1** wherein said optical detection device comprises a waveguide for transmitting incoming and/or outgoing light.

7. The apparatus of claim **6** wherein said electrode arrangement is planar and has a first surface for facing said body tissue or blood and a second opposite surface, wherein said waveguide is located at said second surface.

8. The apparatus of claim **1** further comprising a light emitting waveguide traversing the electrode arrangement and having surface gratings in the gaps between the electrode arrangement for decoupling light emitted from the light source and projecting said light onto said tissue or blood experiencing said electric field.

9. The apparatus of claim **1** further comprising a light detecting waveguide traversing the electrode arrangement and having surface gratings in the gaps between the electrode arrangement for coupling light reflected from said tissue or blood experiencing said electric field and projecting said reflected light onto the light detector.

10. The apparatus of claim **1**, wherein the structural arrangement of the electrical detection device with respect to the optical detection device enables measurements to be taken in a same physical volume of body tissue or blood.

11. An apparatus for determining a glucose level in body tissue or blood comprising

an electrical detection device having an electrode arrangement for applying an electric field to the tissue or blood for measuring at least one first parameter describing a response of said tissue or blood to said electric field,

an optical detection device comprising a light source and a light detector for measuring at least one second parameter describing a transmission or reflection of light by said tissue or blood, and

evaluation circuitry for determining the glucose level from a combination of said first and second parameter,

wherein the electrode arrangement comprises a plurality of electrodes arranged to have a plurality of parallel gaps between them,

wherein said optical detection device is disposed behind the electrode arrangement such that the light source emits light through the gaps in said electrode arrangement and the light detector measures light transmitted through the gaps in said electrode arrangement for measuring said second parameter in a part of said tissue or blood experiencing said electric field.

12. An apparatus for determining a glucose level in body tissue or blood comprising

an electrical detection device having an electrode arrangement for applying an electric field to the tissue or blood for measuring at least one first parameter describing a response of said tissue or blood to said electric field,

an optical detection device comprising a light source and a light detector for measuring at least one second parameter describing a transmission or reflection of light by said tissue or blood, and

evaluation circuitry for determining the glucose level from a combination of said first and second parameter,

wherein the electrode arrangement comprises a plurality of electrodes arranged in a plane to have a plurality of parallel gaps between them,

wherein said optical detection device is located at a distance from said plane of the electrode arrangement such that the light source emits light through the gaps in said electrode arrangement and the light detector measures light transmitted through the gaps in said electrode arrangement for measuring said second parameter in a part of said tissue or blood experiencing said electric field.

* * * * *

专利名称(译)	用于确定身体组织中葡萄糖水平的装置		
公开(公告)号	US9713447	公开(公告)日	2017-07-25
申请号	US12/084392	申请日	2005-11-10
[标]申请(专利权)人(译)	CADUFF ANDREAS TALARY MARK STUART DEWARRAT FRANCOIS HUBER DANIEL 斯塔尔德GIANLUCA		
申请(专利权)人(译)	卡迪夫，安德烈亚斯 TALARY，MARK STUART DEWARRAT，FRANCOIS HUBER，DANIEL 斯塔尔德，GIANLUCA		
当前申请(专利权)人(译)	BIOVOTION AG		
[标]发明人	CADUFF ANDREAS TALARY MARK STUART DEWARRAT FRANCOIS HUBER DANIEL STALDER GIANLUCA		
发明人	CADUFF, ANDREAS TALARY, MARK STUART DEWARRAT, FRANCOIS HUBER, DANIEL STALDER, GIANLUCA		
IPC分类号	A61B5/00 A61B5/053 A61B5/145 A61B5/026 A61B5/11		
CPC分类号	A61B5/6843 A61B5/0531 A61B5/14532 A61B5/0261 A61B5/11 A61B5/721 A61B2560/0242 A61B2562/0219 A61B2562/0247		
代理机构(译)	LADAS & PARRY LLP		
其他公开文献	US20090312615A1		
外部链接	Espacenet USPTO		

摘要(译)

用于非侵入式葡萄糖检测的装置包括电检测装置（ 2 ），用于测量组织或血液对低于1MHz的低频和高于10MHz的高频的电场的响应。 。前者主要由皮肤水合和汗液支配，而后者包含当前葡萄糖水平的贡献。组合这两个信号可以提高准确度。该装置还包括力或加速度传感器（ 4,5 ），其允许检测装置对皮肤的压力和/或快速运动。其他传感器模块，例如温度传感器（ 6 ）或替代灌注传感器（ 7 ），可提高测量结果的准确性。

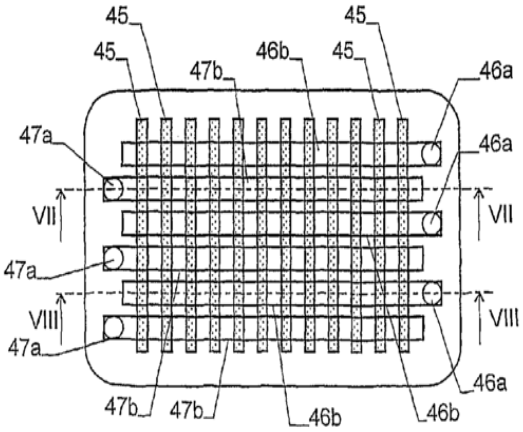
45
45
47b
46b
45
45
46a
47a
46a
VII
VII
47a
VIII
VIII
47a
46a
47b
47b
46b
46b