(19) Europäisches Patentamt
European Patent Office
Office européen des brevets

(11) EP 2 284 899 A3

(12) EUROPEAN PATENT APPLICATION

(88) Date of publication A3:
23.11.2011 Bulletin 2011/47

(43) Date of publication A2:
16.02.2011 Bulletin 2011/07

(21) Application number: **10251423.9**

(22) Date of filing: **10.08.2010**

(51) Int Cl.:
H01L 27/32 *(2006.01)* ***H01L 51/52*** *(2006.01)*

(84) Designated Contracting States:
AL AT BE BG CH CY CZ DE DK EE ES FI FR GB GR HR HU IE IS IT LI LT LU LV MC MK MT NL NO PL PT RO SE SI SK SM TR
Designated Extension States:
BA ME RS

(30) Priority: **10.08.2009 KR 20090073519**

(71) Applicant: **Samsung Mobile Display Co., Ltd.**
Yongin-city, Gyunggi-do 446-711 (KR)

(72) Inventor: **Suh, Min-Chul**
Seoul 137-875 (KR)

(74) Representative: **Mounteney, Simon James**
Marks & Clerk LLP
90 Long Acre
London
WC2E 9RA (GB)

(54) **Organic light emitting display apparatus and method of manufacturing organic light emitting display apparatus**

(57) An organic light emitting display apparatus capable of preventing or reducing an IR drop and a decrease in a contrast ratio, and a method of manufacturing the same. The organic light emitting display apparatus includes: a substrate; a plurality of thin film transistors on the substrate; a plurality of organic light emitting diodes, each of the organic light emitting diodes including: a pixel electrode electrically connected to a corresponding one of the thin film transistors, a portion of an opposite electrode, the opposite electrode being above the substrate and covering all of the substrate, and an intermediate layer between the pixel electrode and the opposite electrode and comprising at least an organic light emitting layer; an opposite electrode bus line between adjacent pixel electrodes of the organic light emitting diodes on the opposite electrode of the organic light emitting diodes; and a black matrix covering the opposite electrode bus line.

FIG. 1

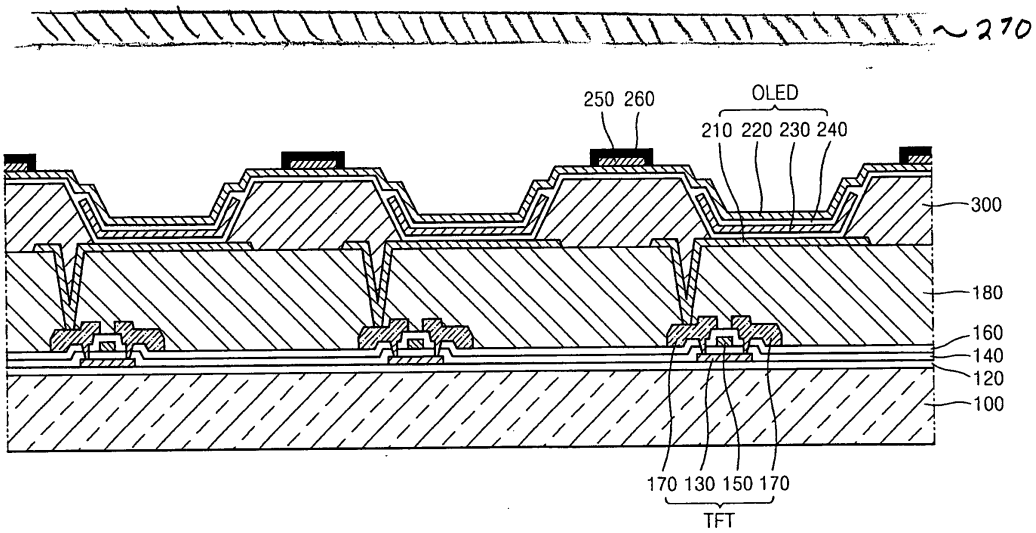

EP 2 284 899 A3

Europäisches Patentamt
European Patent Office
Office européen des brevets

EUROPEAN SEARCH REPORT

Application Number
EP 10 25 1423

DOCUMENTS CONSIDERED TO BE RELEVANT

Category	Citation of document with indication, where appropriate, of relevant passages	Relevant to claim	CLASSIFICATION OF THE APPLICATION (IPC)
X Y	US 2004/263441 A1 (TANAKA YUKIKAZU [JP] ET AL) 30 December 2004 (2004-12-30) * paragraphs [0081] - [0101], [0116]; figure 4 * -----	1,3-11, 14-19 12	INV. H01L27/32 H01L51/52
X	US 2009/174630 A1 (CHAN CHUAN-YI [TW] ET AL) 9 July 2009 (2009-07-09) * paragraphs [0034] - [0045]; figures 5A,5D * -----	1,2,5-9, 11,13, 16-18	
Y	HON K K B ET AL: "Direct writing technology-Advances and developments", CIRP ANNALS, ELSEVIER BV, NL, CH, FR, vol. 57, no. 2, 1 January 2008 (2008-01-01), pages 601-620, XP025675455, ISSN: 0007-8506, DOI: 10.1016/J.CIRP.2008.09.006 [retrieved on 2008-10-28] * page 606; figures 2,11 * -----	12	

TECHNICAL FIELDS SEARCHED (IPC)

H01L

The present search report has been drawn up for all claims

Place of search	Date of completion of the search	Examiner
The Hague	17 October 2011	Persat, Nathalie

CATEGORY OF CITED DOCUMENTS

X : particularly relevant if taken alone
Y : particularly relevant if combined with another document of the same category
A : technological background
O : non-written disclosure
P : intermediate document

T : theory or principle underlying the invention
E : earlier patent document, but published on, or after the filing date
D : document cited in the application
L : document cited for other reasons
.....
& : member of the same patent family, corresponding document

2

EPO FORM 1503 03.82 (P04C01)

ANNEX TO THE EUROPEAN SEARCH REPORT ON EUROPEAN PATENT APPLICATION NO. EP 10 25 1423

This annex lists the patent family members relating to the patent documents cited in the above-mentioned European search report.
The members are as contained in the European Patent Office EDP file on
The European Patent Office is in no way liable for these particulars which are merely given for the purpose of information.

17-10-2011

Patent document cited in search report	Publication date	Patent family member(s)	Publication date
US 2004263441 A1	30-12-2004	CN 1578571 A	09-02-2005
		JP 2005019211 A	20-01-2005
		KR 20050001343 A	06-01-2005
		TW I263183 B	01-10-2006
US 2009174630 A1	09-07-2009	NONE	

EPO FORM P0459

For more details about this annex : see Official Journal of the European Patent Office, No. 12/82

专利名称(译)	有机发光显示装置和制造有机发光显示装置的方法		
公开(公告)号	EP2284899A3	公开(公告)日	2011-11-23
申请号	EP2010251423	申请日	2010-08-10
[标]申请(专利权)人(译)	三星显示有限公司		
申请(专利权)人(译)	三星移动显示器有限公司.		
当前申请(专利权)人(译)	三星DISPLAY CO.，LTD.		
[标]发明人	SUH MIN CHUL		
发明人	SUH, MIN-CHUL		
IPC分类号	H01L27/32 H01L51/52		
CPC分类号	H01L27/3279 H01L51/5212 H01L51/5228 H01L51/5284		
优先权	1020090073519 2009-08-10 KR		
其他公开文献	EP2284899B1 EP2284899A2		
外部链接	Espacenet		

摘要(译)

一种能够防止或减少IR降和对比度降低的有机发光显示装置及其制造方法。有机发光显示装置包括：基板;基板上的多个薄膜晶体管;多个有机发光二极管，每个有机发光二极管包括：像素电极，电连接到相应的一个薄膜晶体管，相对电极的一部分，相对电极位于基板上方并覆盖全部基板，以及像素电极和对电极之间的中间层，至少包括有机发光层;在有机发光二极管的相对电极上的有机发光二极管的相邻像素电极之间的相对电极总线;和覆盖相对电极总线的黑矩阵。
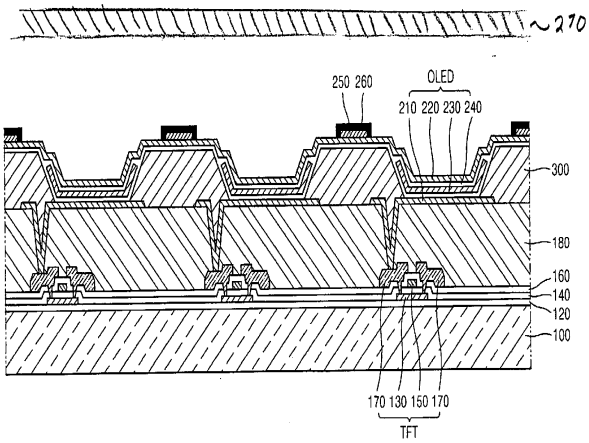
FIG. 1