US 20200201095A1

(19) United States

(12) Patent Application Publication

CHIKAMA et al.

(10) Pub. No.: US 2020/0201095 A1

(43) Pub. Date: Jun. 25, 2020

(54) **LIQUID CRYSTAL DISPLAY DEVICE**

(71) Applicant: **SHARP KABUSHIKI KAISHA**, Sakai City, Osaka (JP)

(72) Inventors: **Yoshimasa CHIKAMA**, Sakai City (JP); **Jun NISHIMURA**, Sakai City (JP); **Yoshiharu HIRATA**, Sakai City (JP)

(73) Assignee: **Sharp Kabushiki Kaisha**, Sakai City, Osaka (JP)

(21) Appl. No.: **16/619,645**

(22) PCT Filed: **Jun. 1, 2018**

(86) PCT No.: **PCT/JP2018/021180**

§ 371 (c)(1),
(2) Date: **Dec. 5, 2019**

(30) **Foreign Application Priority Data**

Jun. 9, 2017 (JP) 2017-114107

Publication Classification

(51) **Int. Cl.**
G02F 1/135 (2006.01)
G06F 3/044 (2006.01)

(52) **U.S. Cl.**
CPC ***G02F 1/1354*** (2013.01); *G02F 2001/1351* (2013.01); ***G06F 3/044*** (2013.01)

(57) **ABSTRACT**

A liquid crystal display device of the present invention includes: a pair of substrates; a liquid crystal layer; a plurality of TFTs; a plurality of pixel electrodes; a common electrode placed in such a manner as to overlap the pixel electrodes via an insulating film; a color filter placed between the TFTs and the pixel electrodes and placed in such a manner as to overlap each of the plurality of pixel electrodes, that includes a plurality of colored portions that exhibit different colors from one another; and a light-blocking conducting film provided on an array substrate, placed closer to the liquid crystal layer than the TFTs while having a light blocking effect, placed in such a manner as to overlap a boundary portion between two adjacent colored portions of the plurality of colored portions, and electrically connected to the common electrode.

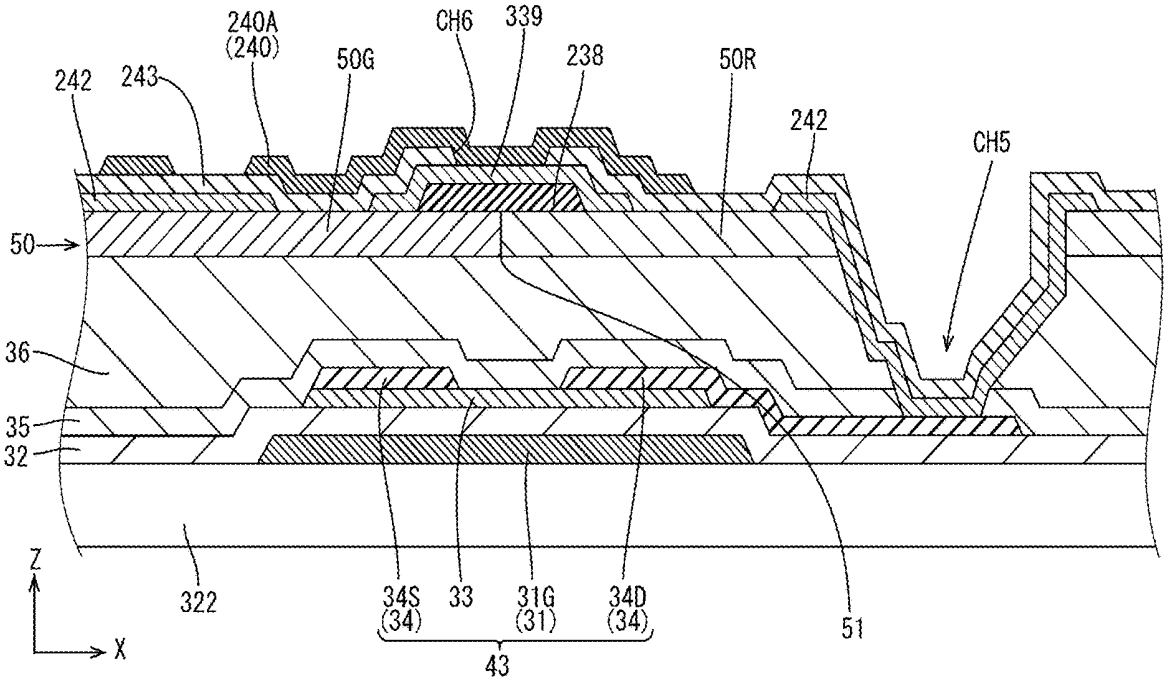

FIG. 1

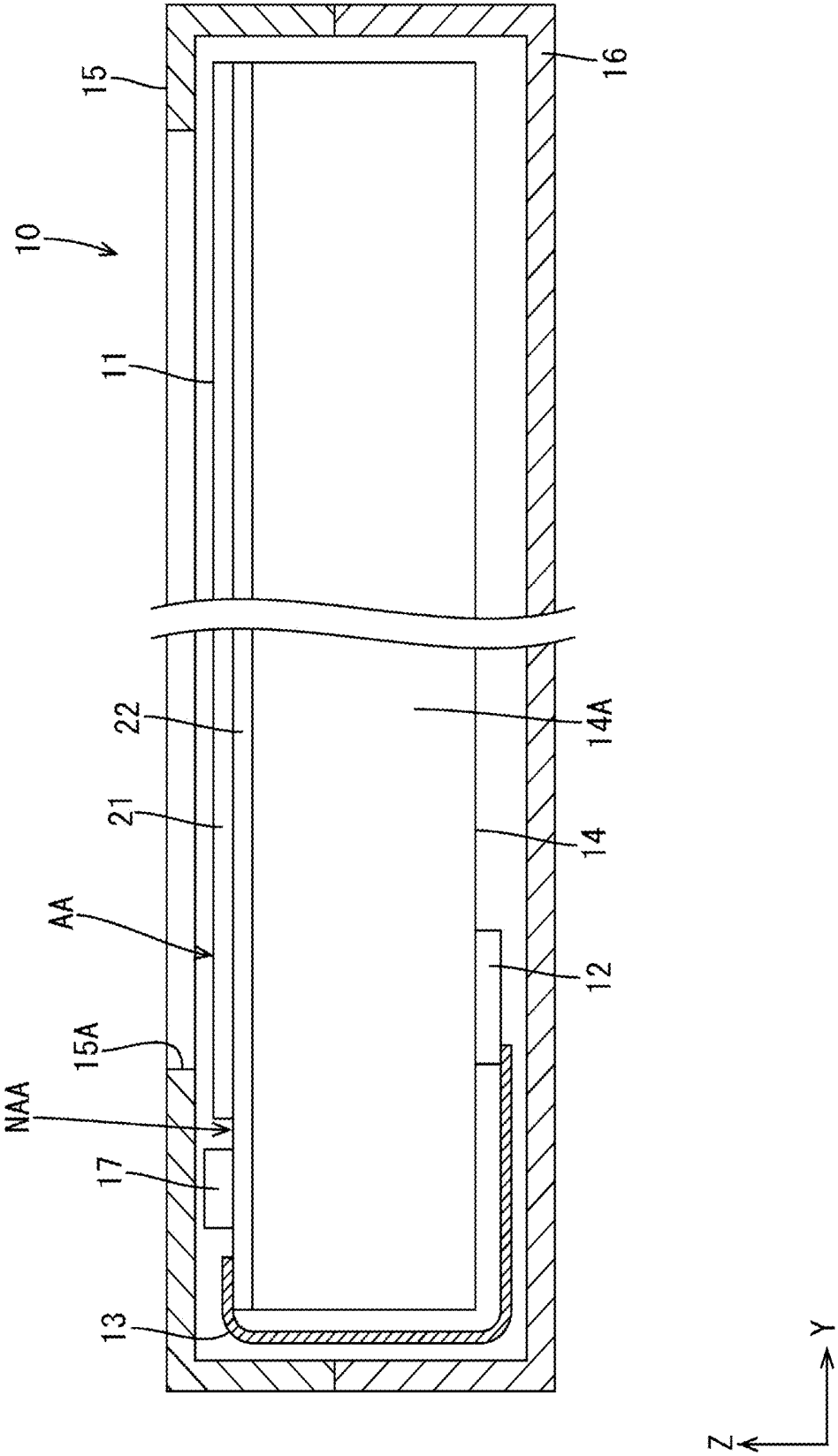

FIG. 2

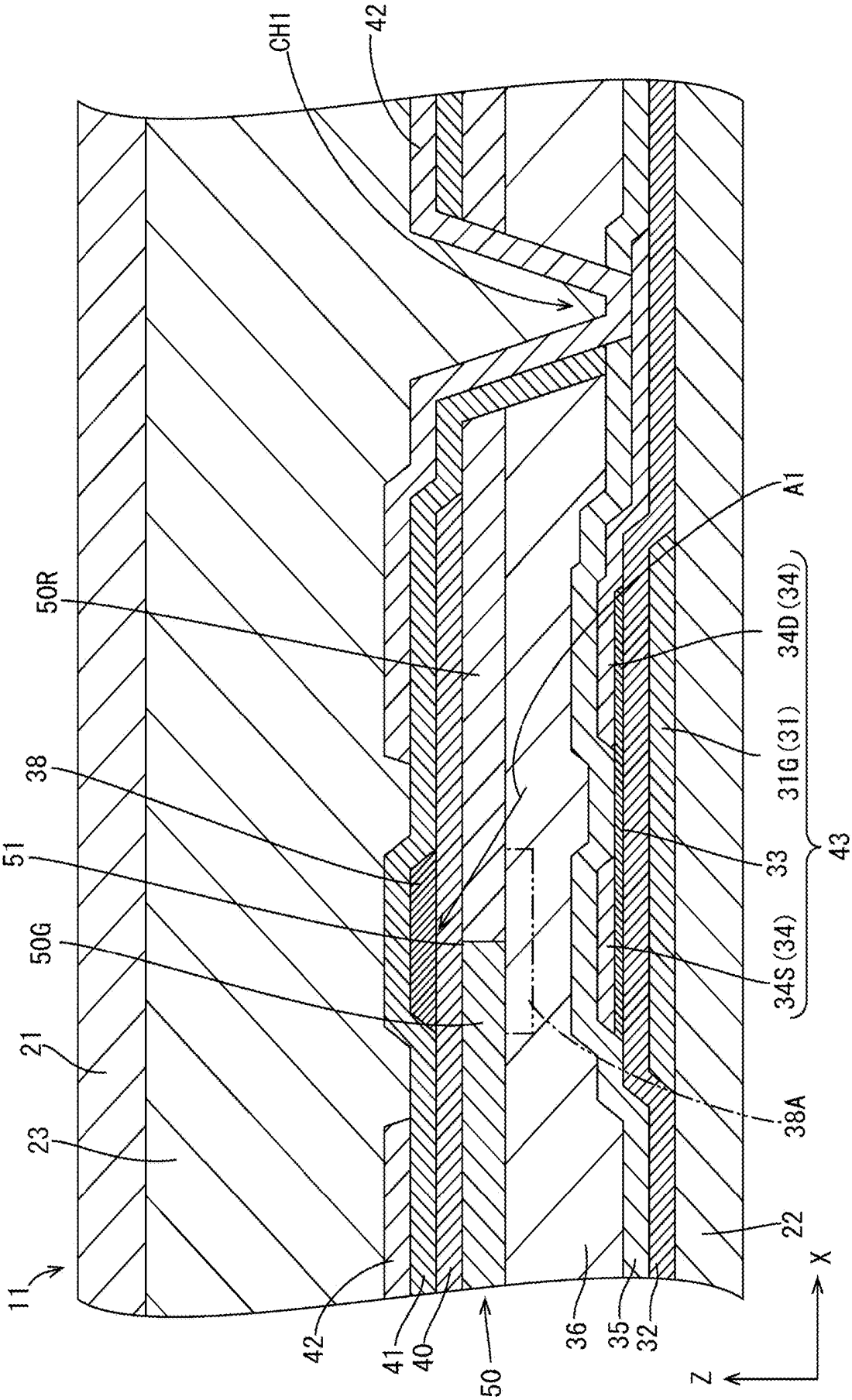
CH1
42
50R
38
51
50G
21
23
11
42
41
40
50
36
35
32
A1
34D (34)
31G (31)
33
34S (34)
43
38A
22
X
Z

FIG. 3

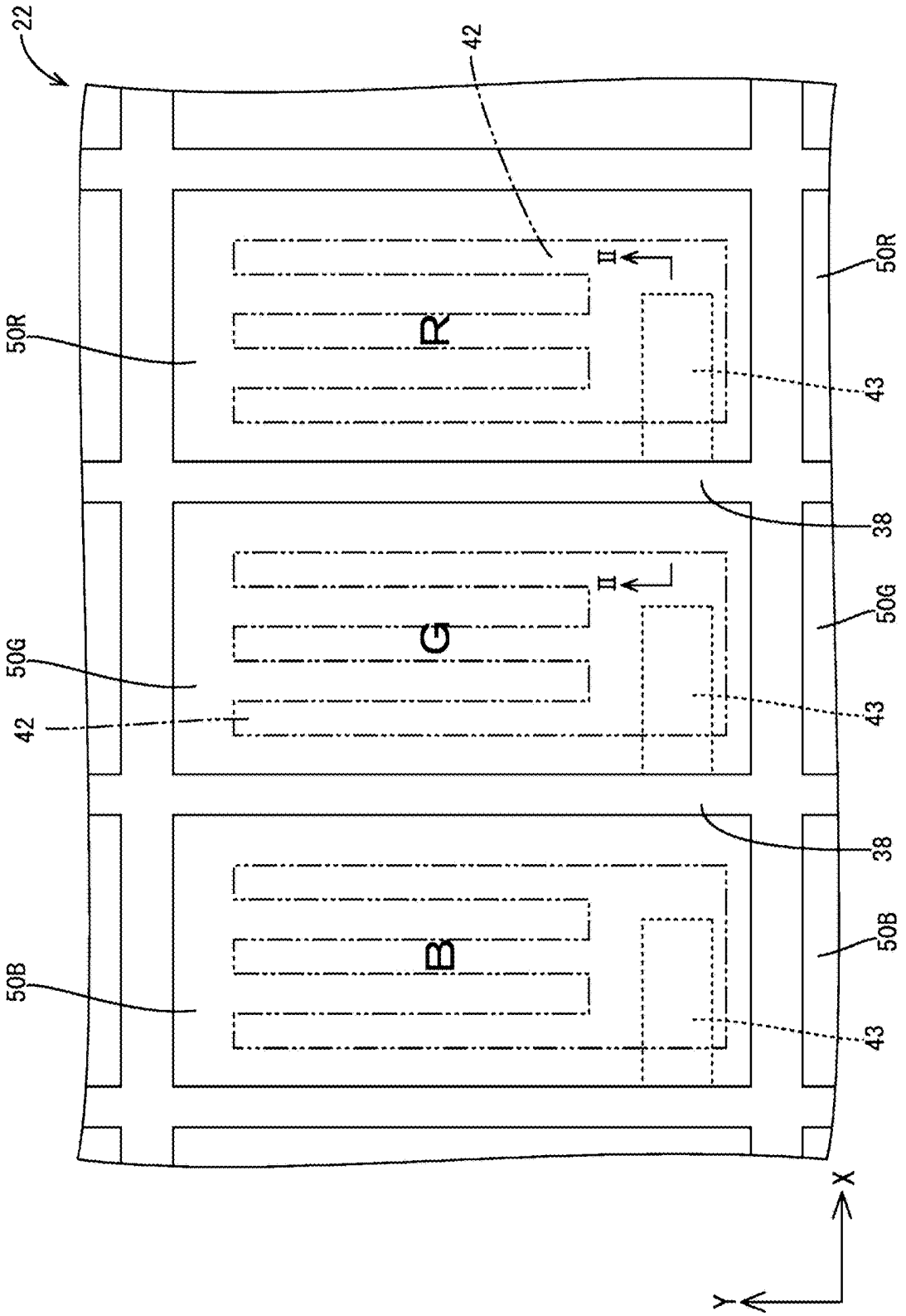

FIG. 4

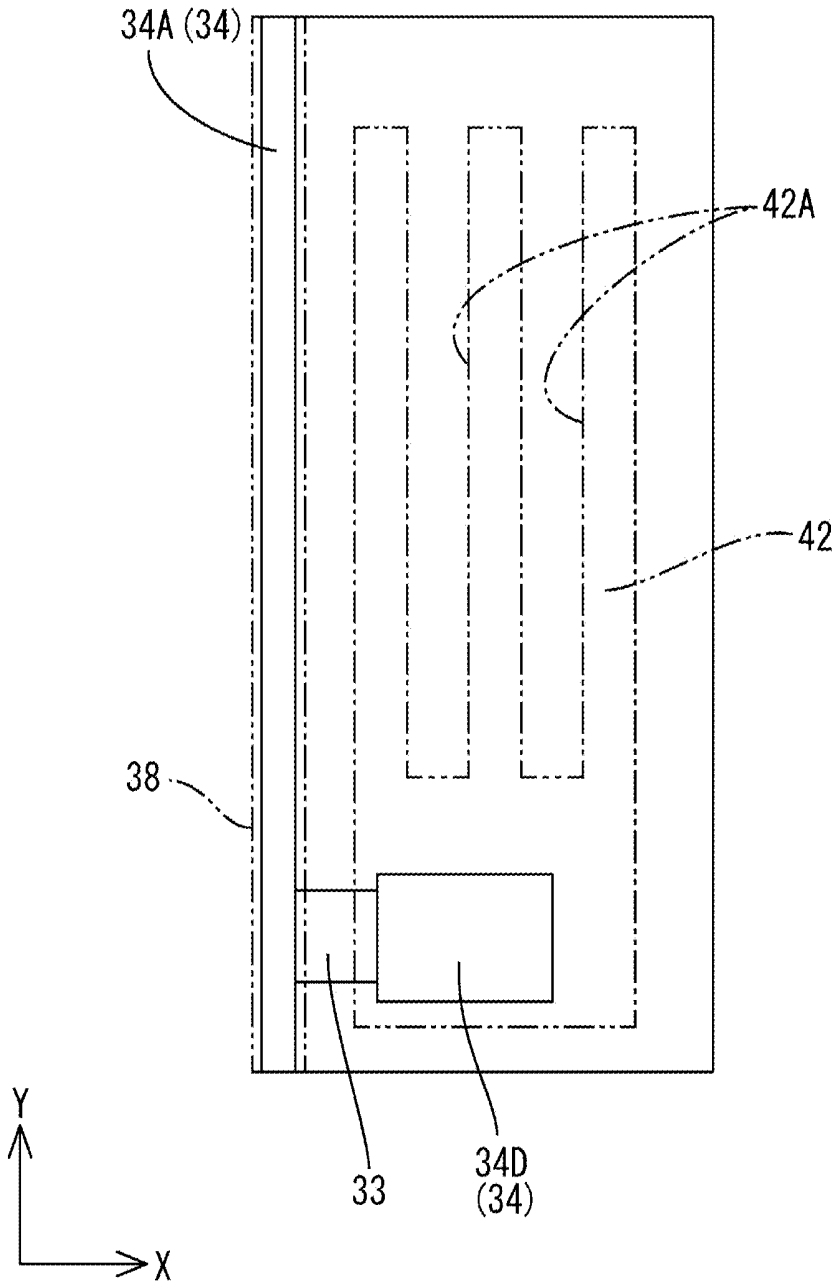

FIG. 5

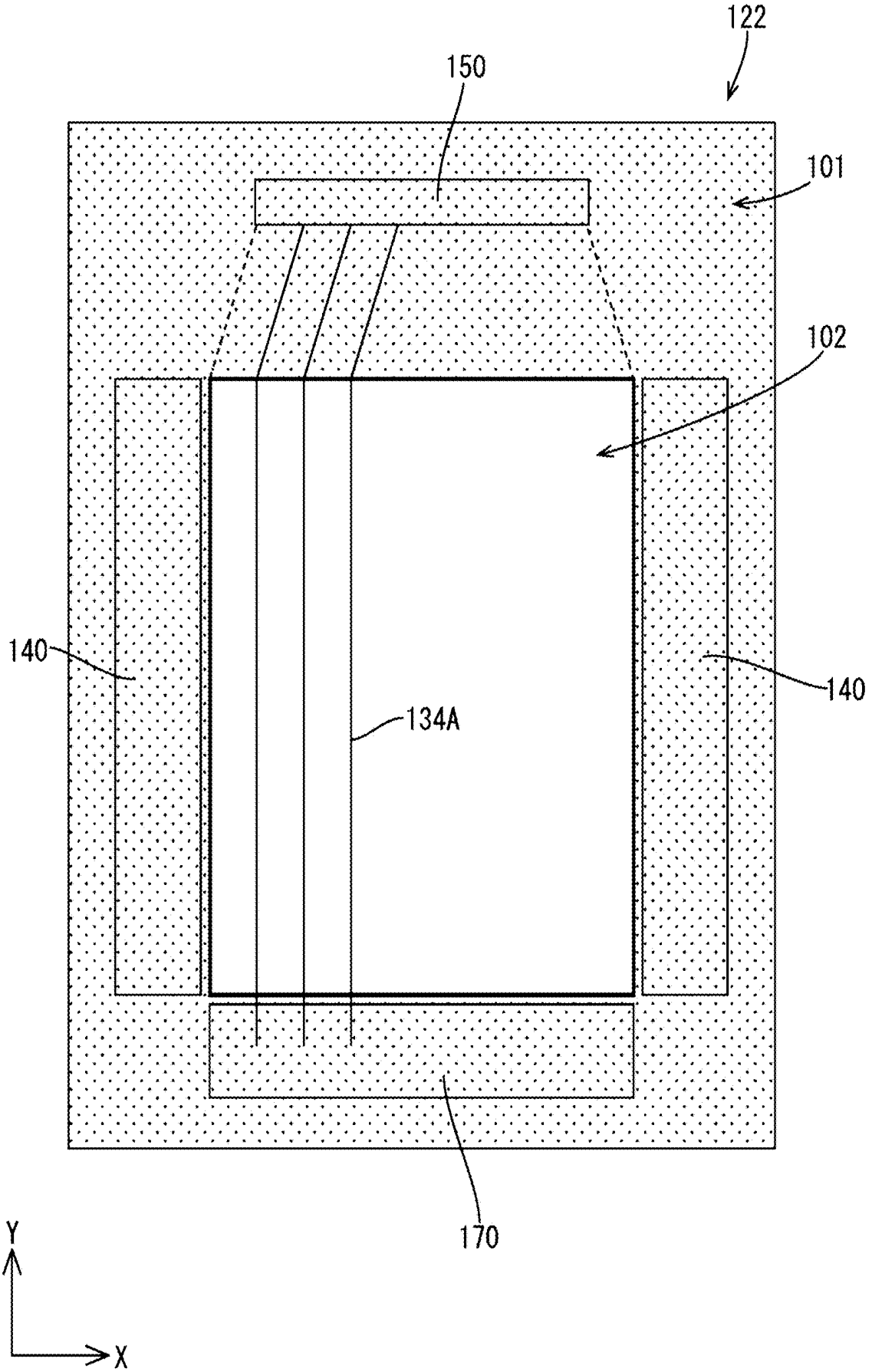

FIG. 6

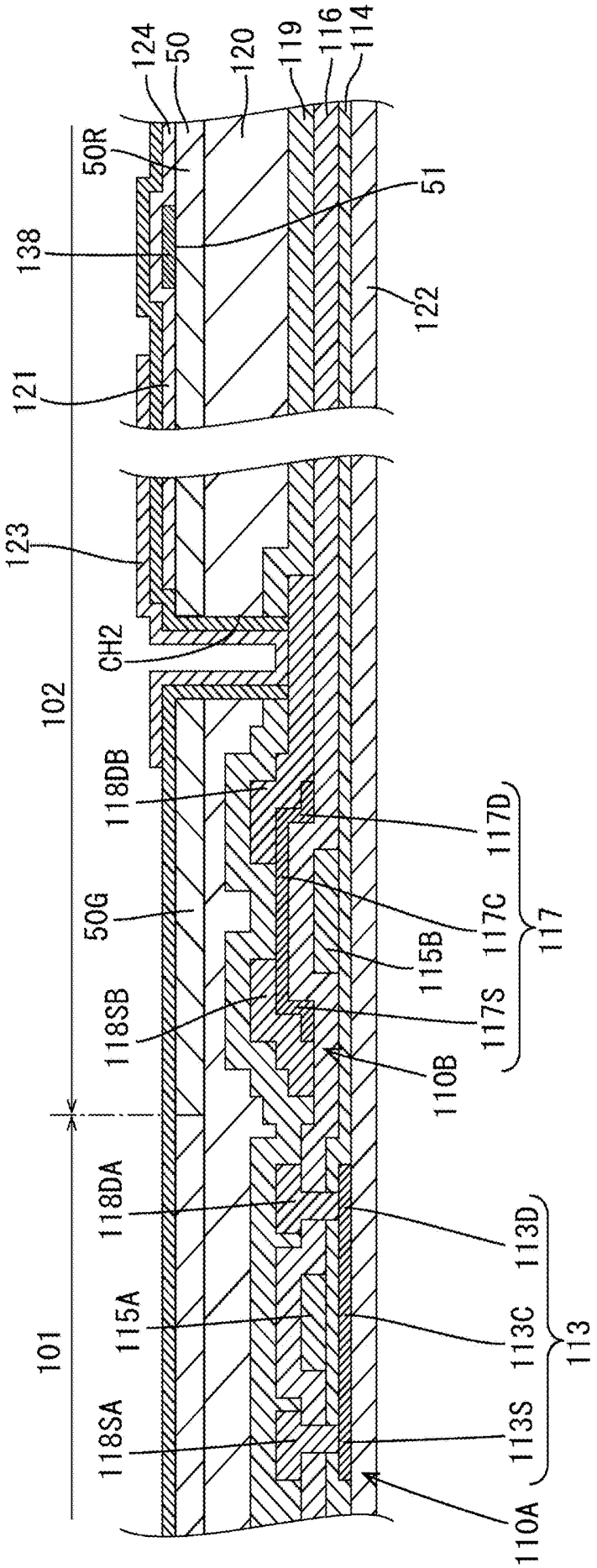
124
50
120
119
116
114
50R
51
138
122
121
123
CH2
102
118DB
117D
50G
117C
117
115B
118SB
117S
110B
118DA
113D
115A
113C
113
101
118SA
113S
110A

FIG. 7

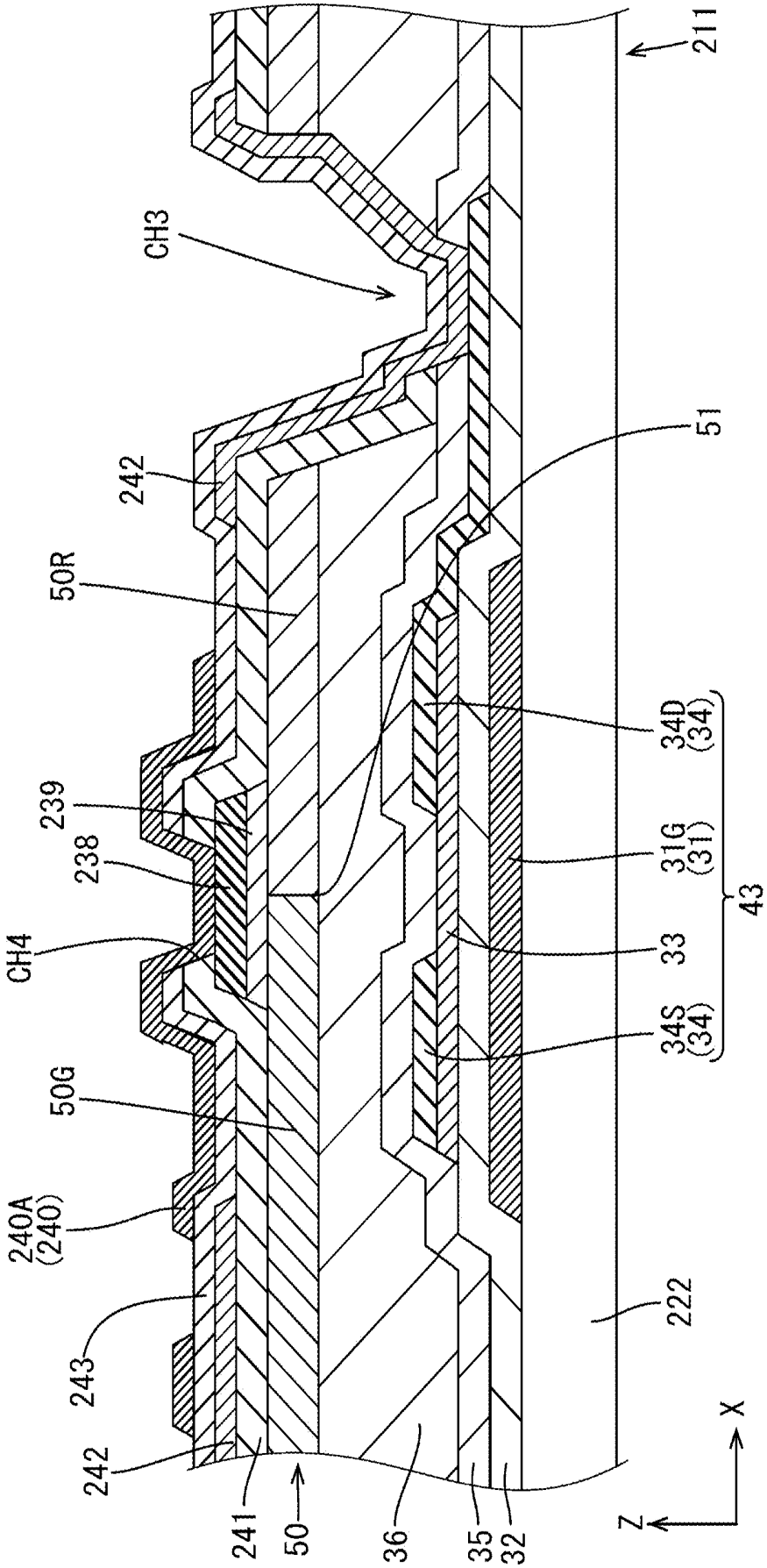
211
CH3
51
242
50R
34D
(34)
239
31G
(31)
238
43
CH4
33
34S
(34)
50G
240A
(240)
222
243
X
242
Z
241
50
36
35
32

FIG. 8

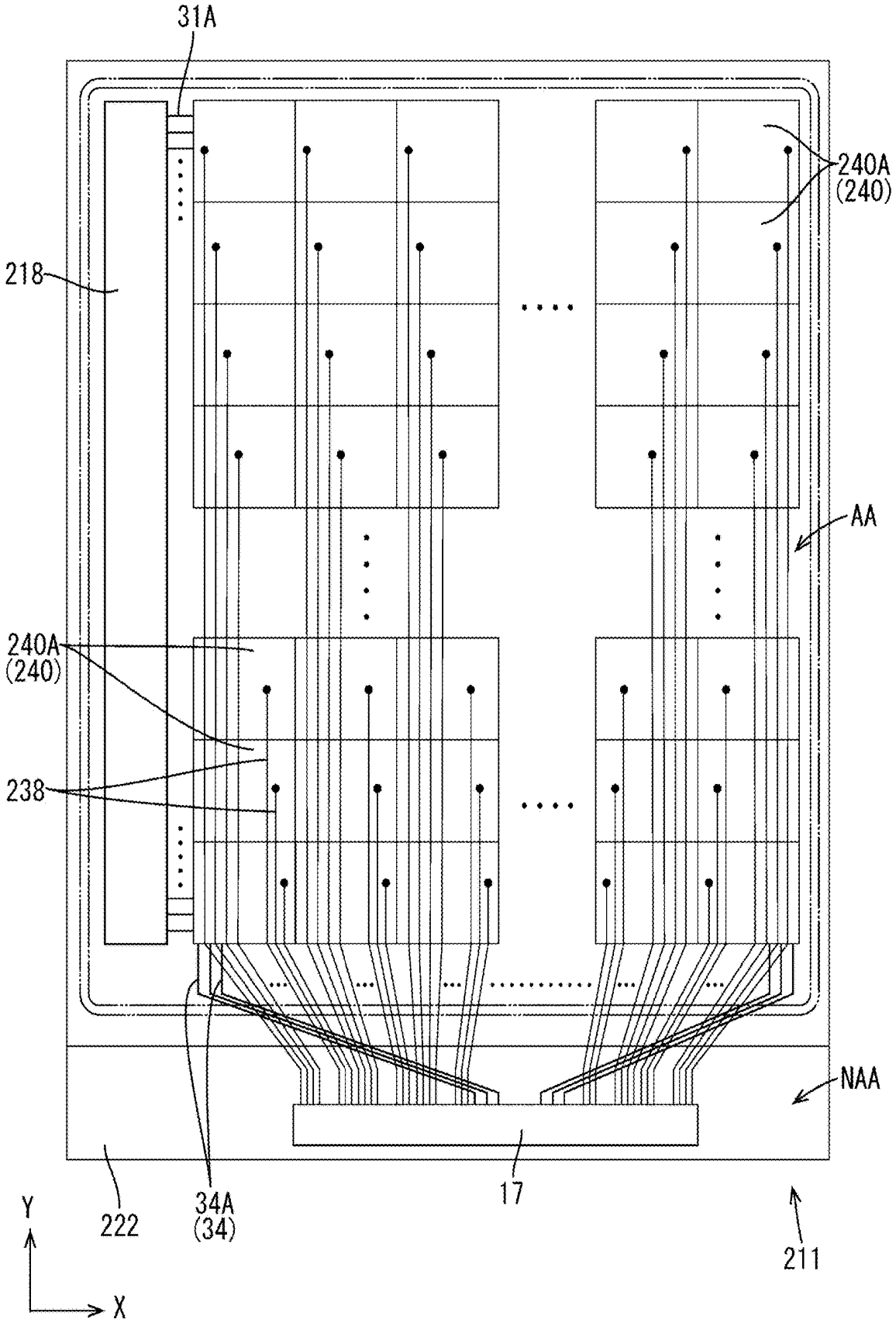

FIG. 9

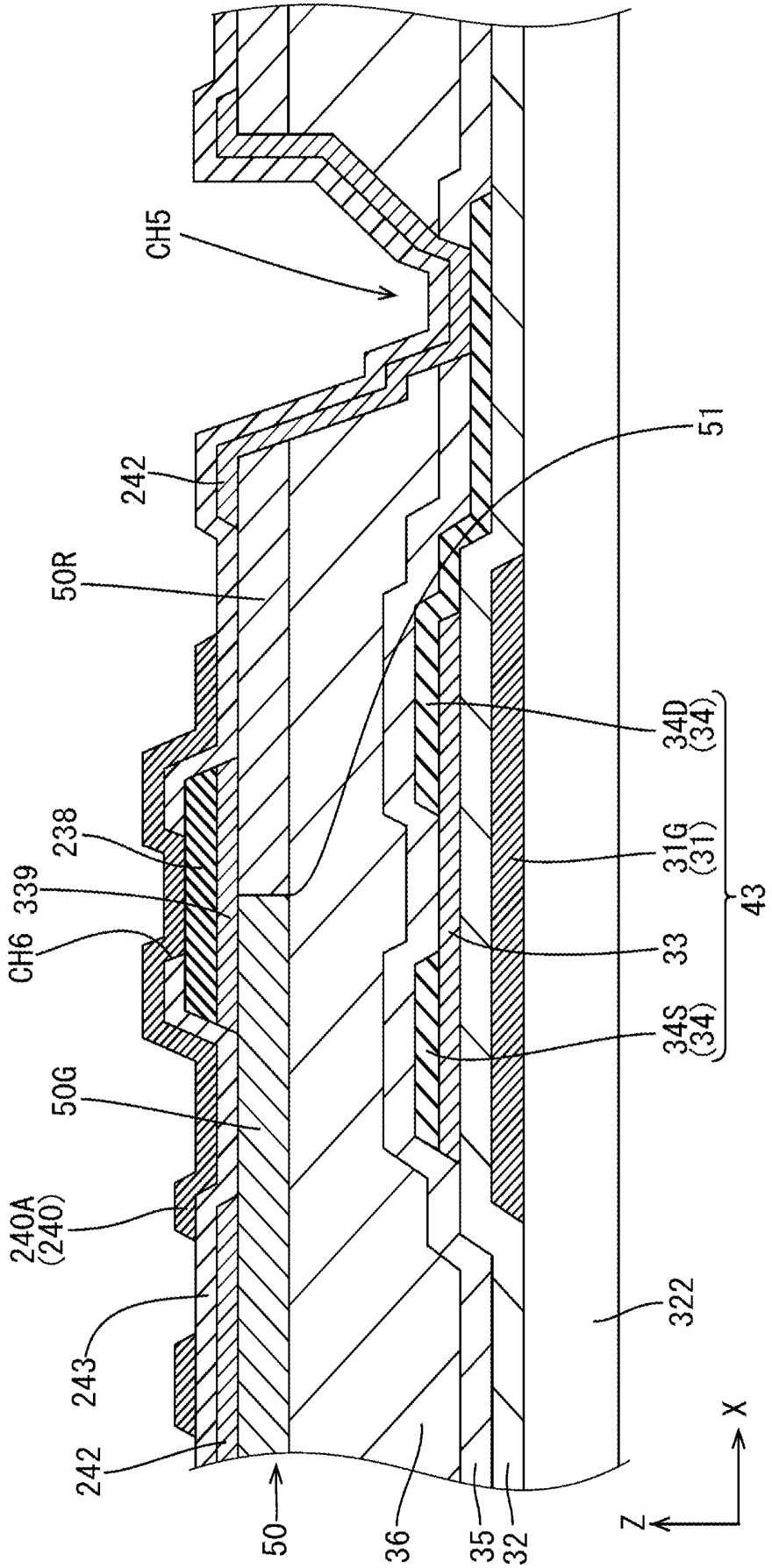
CH5
242
50R
238
339
CH6
50G
240A
(240)
243
242
50
36
35
32
51
34D
(34)
31G
(31)
33
34S
(34)
43
322
Z
X

FIG. 10

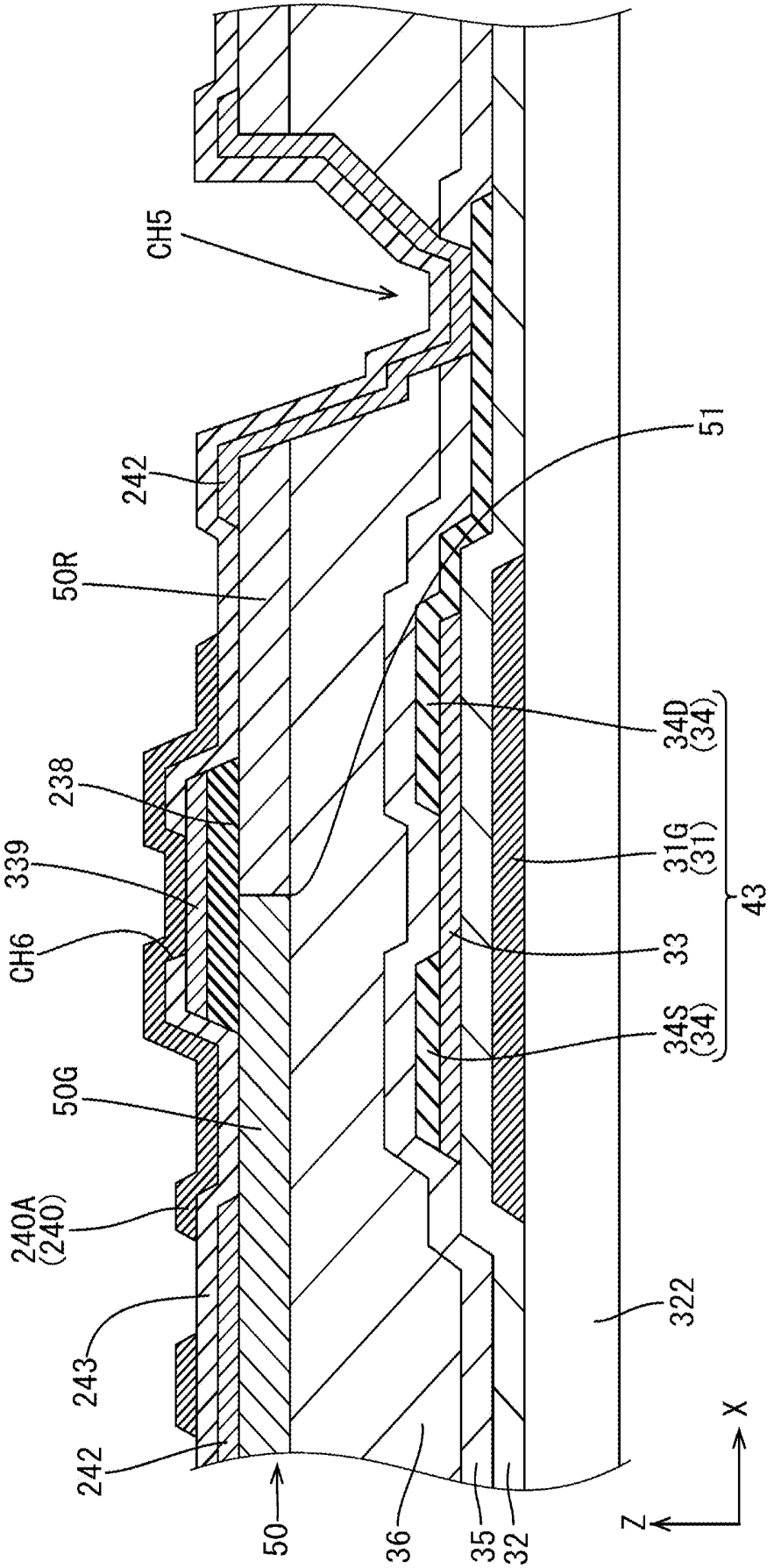
CH5
242
50R
238
339
CH6
50G
240A
(240)
243
242
50
36
35
32
51
34D
(34)
31G
(31)
33
34S
(34)
43
322
Z
X

FIG. 11

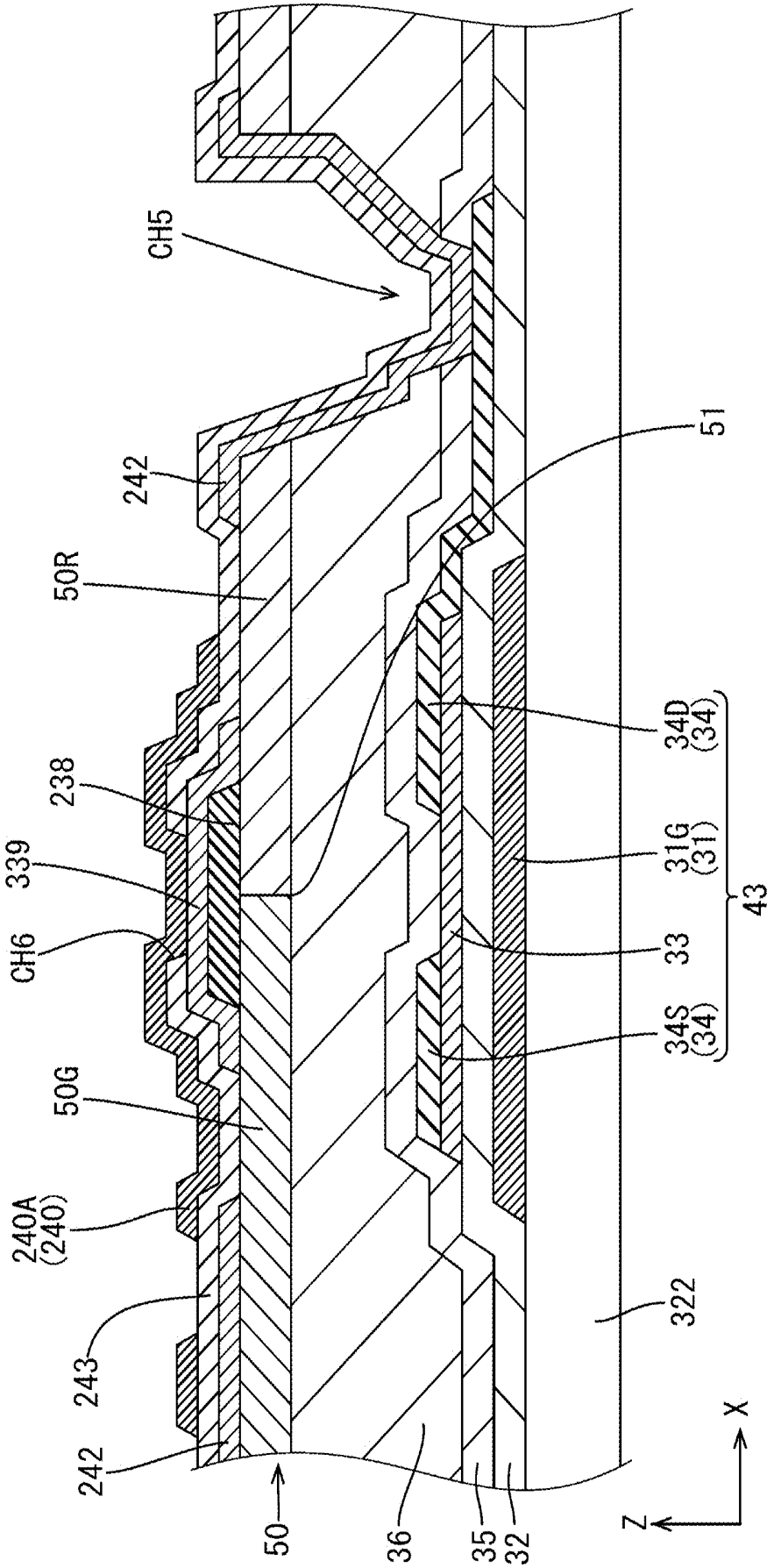
CH5
242
50R
238
339
CH6
50G
240A
(240)
243
242
50
36
35
32
Z
X
322
34S
(34)
33
31G
(31)
34D
(34)
43
51

LIQUID CRYSTAL DISPLAY DEVICE

TECHNICAL FIELD

[0001] The present invention relates to a liquid crystal display device.

BACKGROUND ART

[0002] There has been a conventionally known a liquid crystal display device configured such that a TFT substrate is provided with a color filter and a counter substrate is provided with a black matrix (PTL 1 listed below). The color filter includes a plurality of colored portions placed in such a manner as to correspond to each separate pixel.

CITATION LIST

Patent Literature

[0003] PTL 1: Japanese Unexamined Patent Application Publication No. 2014-41268

Technical Problem

[0004] The foregoing configuration raises concern about a situation where of light traveling toward a liquid crystal layer through the TFT substrate, light having obliquely fallen on one of two adjacent colored portions travels toward a place in the liquid crystal layer that corresponds to the other colored portion. This raises concern about the occurrence of a mixture of colors of pixels, for example, due to the occurrence of a situation or the like where light having passed through a red colored portion is emitted from a pixel that corresponds to a green colored portion.

SUMMARY OF INVENTION

[0005] The present invention was made in view of the above circumstances. An object is to reduce a mixture of colors of pixels.

Solution to Problem

[0006] In order to solve the foregoing problems, a liquid crystal display device of the present invention includes: a pair of substrates placed opposite each other; a liquid crystal layer placed between the two substrates; a plurality of switching elements provided on a first one of the two substrates; a plurality of pixel electrodes provided on the first substrate, electrically connected to the plurality of switching elements, respectively, and placed closer to the liquid crystal layer than the plurality of switching elements; a common electrode, provided on the first substrate, at least a part of which overlaps the pixel electrodes via an insulating film; a color filter, provided on the first substrate, placed between the switching elements and the pixel electrodes, and placed in such a manner as to overlap each of the plurality of pixel electrodes, that includes a plurality of colored portions that exhibit different colors from one another; and a light-blocking conducting film provided on the first substrate, placed closer to the liquid crystal layer than the switching elements while having a light blocking effect, placed in such a manner as to overlap a boundary portion between two adjacent colored portions of the plurality of colored portions, and electrically connected to the common electrode.

[0007] In a case where light has fallen on a side of the color filter opposite to the liquid crystal layer, of light having obliquely fallen on one of the two adjacent colored portions, light traveling toward a place in the liquid crystal layer that corresponds to the other color portion can be blocked by the light-blocking conducting film, so that a mixture of colors of pixels can be reduced. Further, the light-blocking conducting film, which is electrically connected to the common electrode, can for example achieve a reduction in resistance of the common electrode and be used as a wire through which to transmit a signal to the common electrode.

[0008] Further, the light-blocking conducting film may be placed closer to the liquid crystal layer than the color filter. If the light-blocking conducting film is placed opposite the liquid crystal layer behind the color filter, a portion of light traveling toward the liquid crystal layer that has passed through an area near the light-blocking conducting film travels toward the colored portions. As a result, this raises concern about a situation where the light having passed through the area near the light-blocking conducting film passes through one of the colored portions first and then travels toward a place in the liquid crystal layer that corresponds to the other colored portion. On the other hand, according to the foregoing configuration, light having passed through the colored portions can be blocked by the light-blocking conducting film, so that a mixture of colors of pixels can be more surely reduced.

[0009] Further, the light-blocking conducting film may make surface contact with the common electrode. Bringing the light-blocking conducting film into surface contact with the common electrode can make a conducting portion thicker by the thickness of the light-blocking conducting film, thus making it possible to achieve a reduction in resistance.

[0010] Further, the common electrode may serve as a position detection electrode that forms an electrostatic capacitance with a position input body which performs a position input and that detects a position input performed by the position input body, and the light-blocking conducting film may be a wire that is capable of transmitting a signal to the position detection electrode. The light-blocking conducting film can be used as a wire for the position detection electrode.

[0011] Further, each of the switching elements may include a source electrode, the first substrate may be provided with a source line that is electrically connected to the source electrode, and the light-blocking conducting film may be placed in such a manner as to overlap the source line. This configuration can achieve higher efficiency in the use of light than a configuration in which the light-blocking conducting film and the source line are placed in such a manner as not to overlap each other.

[0012] Each of the switching elements may be a TFT including an oxide semiconductor. Since the oxide semiconductor is high in electron mobility, the switching element can be made smaller in size. This brings about an advantage in terms of an increase in definition and an increase in aperture ratio. Further, a reduction in leak current brings about an advantage in terms of a reduction in power consumption. Further, the oxide semiconductor may contain indium (In), gallium (Ga), zinc (Zn), and oxygen (O).

Advantageous Effects of Invention

[0013] The present invention makes it possible to reduce a mixture of colors of pixels.

BRIEF DESCRIPTION OF DRAWINGS

[0014] FIG. **1** is a cross-sectional view of a liquid crystal display device according to Embodiment 1 of the present invention as taken along a longitudinal direction (Y-axis direction).

[0015] FIG. **2** is a cross-sectional view showing a liquid crystal panel.

[0016] FIG. **3** is a plan view showing a part of an array substrate of the liquid crystal panel.

[0017] FIG. **4** is a plan view showing a pixel in the array substrate.

[0018] FIG. **5** is a plan view showing an array substrate according to Embodiment 2.

[0019] FIG. **6** is a cross-sectional view showing the array substrate according to Embodiment 2.

[0020] FIG. **7** is a cross-sectional view showing an array substrate according to Embodiment 3.

[0021] FIG. **8** is a plan view showing the array substrate according to Embodiment 3.

[0022] FIG. **9** is a cross-sectional view showing an array substrate according to Embodiment 4.

[0023] FIG. **10** is a cross-sectional view showing an array substrate according to Embodiment 5.

[0024] FIG. **11** is a cross-sectional view showing a modification of Embodiment 5.

DESCRIPTION OF EMBODIMENTS

Embodiment 1

[0025] Embodiment 1 of the present invention is described with reference to FIGS. **1** to **4**. Some of the drawings show an X axis, a Y axis, and a Z axis and are drawn so that the direction of each axis is an identical direction in each drawing. As shown in FIG. **1**, a liquid crystal display device **10** includes a liquid crystal panel **11** (display panel), a driver **17** (panel drive unit) that drives the liquid crystal panel **11**, a control circuit substrate **12** (external signal supply source) that supplies the driver **17** with various types of input signal from outside, a flexible substrate **13** (external connection component) that electrically connects the liquid crystal panel **11** and the control circuit substrate **12** to each other, and a backlight device **14** (lighting device) that supplies the liquid crystal panel **11** with light. As shown in FIG. **1**, the backlight device **14** includes a chassis **14**A that is substantially in the shape of a box having an opening facing forward (i.e. toward the liquid crystal panel **11**), a light source (not illustrated; e.g. a cold-cathode tube, an LED, organic EL, or the like), and an optical member (not illustrated) placed in such a manner as to cover the opening of the chassis **14**A. The optical member has a function of, for example, converting light emitted from the light source into planar light.

[0026] Further, the liquid crystal display device **10** includes a pair of front and back exterior members **15** and **16** assembled to each other to accommodate and retain the liquid crystal panel **11** and the backlight device **14**. Of them, the front exterior member **15** has an opening **15**A formed therein so that an image displayed in a display area AA of the liquid crystal panel **11** can be viewed from outside. The liquid crystal display device **10** according to the present embodiment is one that is used in various types of electronic apparatus (not illustrated) such as mobile phones (including smartphones and the like), laptop personal computers (including tablet laptop personal computers and the like), wearable terminals (including smartwatches and the like), portable information terminals (including electronic books, PDAs, and the like), portable game machines, and digital photo frames. For this purpose, the liquid crystal panel **11** of the liquid crystal display device **10** has a screen size of approximately several inches to several tens of inches, which is a size generally categorized as a small size or a small-to-medium size.

[0027] The liquid crystal panel **11** has the display area AA, which is capable of displaying an image, and a non-display area NAA placed on the periphery in such a manner as to surround the display area AA. The liquid crystal panel **11** has a vertically long square shape (rectangular shape) as a whole, with the driver **17** attached to one end of the liquid crystal panel **11** in a long-side direction (i.e. a right-left direction of FIG. **1**). The driver **17** is composed of an LSI chip having a drive circuit inside and, by operating in accordance with a signal that is supplied from the control circuit substrate **12** serving as a signal supply source, generates an output signal by processing an input signal that is supplied from the control circuit substrate **12** serving as a signal supply source and outputs the output signal to the display area of the liquid crystal panel **11**.

[0028] As shown in FIG. **2**, the liquid crystal panel **11** includes a pair of substrates **21** and **22** placed opposite each other, a liquid crystal layer **23** (medium layer), placed between the two substrates **21** and **22**, that contains liquid crystal molecules that constituting a substance whose optical properties vary in the presence of the application of an electric field, and a seal member (not illustrated), placed between the two substrates **21** and **22**, that seals the liquid crystal layer **23** by surrounding the liquid crystal layer **23**. The pair of substrates **21** and **22** include a front (front side) substrate serving as a counter substrate **21** and a back (back side) substrate serving as an array substrate **22** (active matrix substrate, element substrate). The counter substrate **21** and the array substrate **22** each includes a glass substrate made of glass and various types of film formed and stacked on an inner side of the glass substrate. It should be noted that polarizing plates (not illustrated) are pasted to outer sides of the two substrates **21** and **22**, respectively. An alignment film (not illustrated) is provided on the inner side of the counter substrate **21** (that faces the liquid crystal layer **23**).

[0029] As shown in FIG. **2**, various types of film are stacked on an inner side of the array substrate **22** (that faces the liquid crystal layer **23** and that faces the counter substrate **21**). On the array substrate **22**, a gate conducting film **31** (gate metal), a gate insulating film **32**, a semiconductor film **33**, a source conducting film **34** (source metal), an insulating film **35**, a planarizing film **36**, a color filter **50**, a common electrode **40**, a light-blocking conducting film **38**, an insulating film **41**, and a pixel electrode **42** are formed and stacked in this order from the bottom. Such an array substrate **22** is fabricated by repeating a photolithography step and an etching step more than once.

[0030] The gate conducting film **31** has electrical conductivity and a light blocking effect by being a single layer made of one type of metal material or a laminated film or alloy made of different types of metal material, and constitutes a gate electrode **31**G of a TFT **43** provided on the array

substrate **22** and a gate line (not illustrated). An appropriately usable example of the gate conducting film **31** is a film containing a metal such as copper (Cu), titanium (Ti), molybdenum (Mo), aluminum (Al), magnesium (Mg), cobalt (Co), chromium (Cr), or tungsten (W), an alloy thereof, or a metal nitride thereof. The gate insulating film **32** mainly keeps the gate conducting film **31** and the semiconductor film **33** insulated from each other. The semiconductor film **33** is constituted by a thin film made, for example, of an oxide semiconductor as a material, and constitutes a channel part (semiconductor part) in the TFT **43** that is connected to the source electrode **34**S and the drain electrode **34**D. A possible example of the oxide semiconductor of which the semiconductor film **33** is made is an oxide semiconductor (semiconductor based on In—Ga—Zn—O) containing In (indium), Ga (gallium), Zn (zinc), and O (oxygen). Since the oxide semiconductor is high in electron mobility, the TFT **43** can be made smaller in size. This brings about an advantage in terms of an increase in definition and an increase in aperture ratio. Further, a reduction in leak current brings about an advantage in terms of a reduction in power consumption. Alternatively, an amorphous silicon TFT or a polysilicon TFT may be applied as the TFT **43**.

[0031] The source conducting film **34** has electrical conductivity and a light blocking effect by being a single layer made of one type of metal material or a laminated film or alloy made of different types of metal material, and constitutes a source line **34**A (see FIG. **4**), source and drain electrodes **34**S and **34**D of the TFT **43**, and the like. That is, the source conducting film **34** can also be called a drain conducting film, and the source line **34**A, the source electrode **34**S, and the drain electrode **34**D are placed at the same level. An appropriately usable example of the source conducting film **34** is a film containing a metal such as copper (Cu), titanium (Ti), molybdenum (Mo), aluminum (Al), magnesium (Mg), cobalt (Co), chromium (Cr), or tungsten (W), an alloy thereof, or a metal nitride thereof. The insulating film **35** is placed on top of at least the source conducting film **34**. The planarizing film **36** is placed on top of the insulating film **35**, and is made, for example, of an acrylic resin material (e.g. polymethylmethacrylate (PMMA)), which is an organic resin material. The planarizing film **36** is an organic insulating film that is greater in film thickness than other organic insulating films (insulating films **32**, **35**, and **41**) and that has a function of planarizing a surface.

[0032] The color filter **50** is placed between the planarizing film **36** and the common electrode **40** and, by extension, between the TFT **43** and the pixel electrode **42**. As shown in FIG. **3**, the color filter **50** includes a plurality of colored portions **50**R, **50**G, and **50**B arranged in a matrix. The colored portions **50**R, **50**G, and **50**B exhibit different colors from one another and, specifically, are composed of three colors, namely red (R) colored portions **50**R, green (G) colored portions **50**G, and blue (B) colored portions **50**B. As shown in FIG. **3**, each of the colored portions **50**R, **50**G, and **50**B has a square shape in plan view and is placed opposite a corresponding pixel electrode **42**. That is, the plurality of colored portions **50**R, **50**G, and **50**B are placed in such a manner as to overlap a plurality of the pixel electrodes **42**, respectively. A pixel is constituted by a set of colored portions and a pixel electrode **42** placed opposite each other. The common electrode **40** is placed on top of the color filter **50**. The common electrode **40** and the pixel electrode **42** are composed of a transparent electrode film (e.g. ITO (indium tin oxide) or the like). The common electrode **40** is placed in such a manner as to overlap the pixel electrodes **42** via the insulating film **41**.

[0033] An appropriately usable example of the light-blocking conducting film **38** is a film containing a metal such as copper (Cu), titanium (Ti), molybdenum (Mo), aluminum (Al), magnesium (Mg), cobalt (Co), chromium (Cr), or tungsten (W), an alloy thereof, or a metal nitride thereof. The light-blocking conducting film **38** has a light blocking effect and is placed closer to the liquid crystal layer **23** than the TFT **43**. Further, the light-blocking conducting film **38** is placed closer to the liquid crystal layer **23** than the color filter **50** and, as shown in FIGS. **2** and **3**, is placed in such a manner as to overlap a boundary portion **51** between colored portions of two different colors (in FIG. **2**, the colored portions **50**R and **50**G) of the plurality of colored portions **50**R, **50**G, and **50**B. The light-blocking conducting film **38** is placed on top of the common electrode **40**, and is electrically connected to the common electrode **40** by making surface contact with the common electrode **40**. Further, as shown in FIG. **4**, the light-blocking conducting film **38** is placed in such a manner as to overlap the source line **34**A, which is electrically connected to the source electrode **34**S.

[0034] The insulating film **41** is placed in such a manner as to cover the common electrode **40** and the light-blocking conducting film **38**. The pixel electrode **42** is placed on top of the insulating film **41**. The gate insulating film **32**, the insulating film **35**, and the insulating film **41** are inorganic insulating films made of an inorganic material such as silicon nitride (SiN_x) or silicon oxide (SiO_2), and have moisture-proof properties. A plurality of the pixel electrodes **42** are arranged in a matrix in the display area. Further, in the display area, a plurality of the TFTs **43**, which serve as switching elements, are arranged in a matrix in correspondence with the pixel electrodes **42**. The TFT **43** includes the gate electrode **31**G, the semiconductor film **33**, the source electrode **34**S, and the drain electrode **34**D. The pixel electrode **42** is placed closer to the liquid crystal layer **23** than the TFT **43** and is electrically connected to the drain electrode **34**D via a contact hole CH**1** formed in the insulating film **35**.

[0035] The TFT **43** is provided at a place where a gate line (not illustrated) and the source line **34**A cross each other, and is driven in accordance with various types of signal that are supplied to the gate line and the source line **34**A, and the driving of the TFT **43** entails control of supply of a potential to the pixel electrode **42**. The pixel electrode **42** has a plurality of slits **42**A as indicated by chain double-dashed lines in FIG. **4**. When a potential difference is generated between the pixel electrode **42** and the common electrode **40**, a fringe field (oblique field) including a component along a board surface of the array substrate **22** and a component in a direction normal to the board surface of the array substrate **22**. This makes it possible to display an image in the display area by utilizing the fringe field to control a state of alignment of the liquid crystal molecules contained in the liquid crystal layer **23**. That is, an operation of the liquid crystal panel **11** according to the present embodiment is an FFS (fringe field switching) mode.

[0036] Next, effects of the present embodiment are described. In the present embodiment, light emitted from the backlight device **14** falls on a side of the color filter **50**

opposite to the liquid crystal layer **23**. In such a case, of light having obliquely fallen on one (in FIG. **2**, the colored portion **50**R) of two adjacent colored portions, light (indicated by an arrow μl in FIG. **2**) traveling toward a place in the liquid crystal layer that corresponds to the other color portion (in FIG. **2**, the colored portion **50**G) can be blocked by the light-blocking conducting film **38**, so that a mixture of colors of pixels can be reduced. Further, the light-blocking conducting film **38**, which is electrically connected to the common electrode **40**, makes it possible to achieve a reduction in resistance of the common electrode.

[0037] Further, the light-blocking conducting film **38** is placed closer to the liquid crystal layer **23** than the color filter **50**. If the light-blocking conducting film **38** is placed opposite the liquid crystal layer **23** behind the color filter **50** (see a light-blocking conducting film **38**A indicated by a chain double-dashed lines in FIG. **2**), a portion of light traveling toward the liquid crystal layer **23** that has passed through an area near the light-blocking conducting film **38**A travels toward the colored portions. As a result, this raises concern about a situation where the light having passed through the area near the light-blocking conducting film **38**A passes through one of the colored portions first and then travels toward a place in the liquid crystal layer **23** that corresponds to the other colored portion. On the other hand, according to the foregoing configuration, light having passed through the colored portions can be blocked by the light-blocking conducting film **38**, so that a mixture of colors of pixels can be more surely reduced.

[0038] Further, the light-blocking conducting film **38** is configured to make surface contact with the common electrode **40**. Bringing the light-blocking conducting film **38** into surface contact with the common electrode **40** can make a conducting portion (the common electrode **40** and the light-blocking conducting film **38**) thicker by the thickness of the light-blocking conducting film **38**, thus making it possible to achieve a reduction in resistance. Further, the TFT **43**, which serves as a switching element, includes the source electrode **34**S. The array substrate **22** is provided with the source line **34**A, which is electrically connected to the source electrode **34**S. The light-blocking conducting film **38** is placed in such a manner as to overlap the source line **34**A. This configuration can achieve higher efficiency in the use of light than a configuration in which the light-blocking conducting film **38** and the source line **34**A are placed in such a manner as not to overlap each other (e.g. in such a manner as to be displaced from each other in the X-axis direction).

Embodiment 2

[0039] Next, Embodiment 2 of the present invention is described with reference to FIGS. **5** and **6**. A repeated description is omitted by assigning identical signs to components which are identical to those of the foregoing embodiment. The present embodiment differs from the foregoing embodiment in that two types of TFT (namely a crystalline silicon TFT **110**A and an oxide semiconductor TFT **110**B) are provided on top of an array substrate **122**. The array substrate **122** is provided with oxide semiconductor TFTs **110**B for each separate pixel. Further, in the present embodiment, a part or the whole of a peripheral drive circuit is integrally formed on top of the same substrate as the oxide semiconductor TFT **110**B, which serves as a pixel TFT. Such an array substrate is called a driver monolithic array substrate. In the driver monolithic array substrate, the peripheral drive circuit is provided in an area (non-display area or frame area) other than an area (display area) including a plurality of pixels. The peripheral drive circuit is constituted by a TFT (circuit TFT) an example of which is the crystalline silicon TFT **110**A, whose active layer is a polycrystalline silicon film. By thus using the oxide semiconductor TFT **110**B as a pixel TFT and using the crystalline silicon TFT **110**A as a circuit TFT, it is made possible to reduce power consumption in the display area and, furthermore, it is made possible to make the frame area smaller.

[0040] Next, a more specific configuration of the array substrate **122** of the present embodiment is described with reference to the drawings. FIG. **5** is a schematic plan view showing an example of a planar structure of the array substrate **122** of the present embodiment, and FIG. **6** is a cross-sectional view showing a cross-sectional structure of the crystalline silicon TFT **110**A and the oxide semiconductor TFT **110**B in the array substrate **122**. As shown in FIG. **5**, the array substrate **122** includes a display area **102** including a plurality of pixels and an area (non-display area) other than the display area **102**. The non-display area includes a drive circuit formation area **101** where a drive circuit is provided. In the drive circuit formation area **101**, a gate driver **140**, a check circuit **170**, and the like are provided. Formed in the display area **102** are a plurality of gate lines (not illustrated) that extend in a row-wise direction and a plurality of source lines **134**A that extend in a column-wise direction. The gate lines are connected to terminals, respectively, of the gate driver **140**. The source lines **134**A are connected to terminals, respectively, of a driver **150** mounted on the array substrate **122**. In the array substrate **122**, as shown in FIG. **6**, each pixel of the display area **102** is provided with an oxide semiconductor TFT **110**B as a pixel TFT, and the drive circuit formation area **101** is provided with a crystalline silicon TFT **110**A as a circuit TFT.

[0041] The crystalline silicon TFT **110**A has an active region composed mainly of crystalline silicon. The oxide semiconductor TFT **110**B has an active region composed mainly of an oxide semiconductor. The term "active region" here refers to a region, included in a semiconductor layer serving as an active layer of a TFT, in which a channel is formed. The crystalline silicon TFT **110**A has a crystalline silicon semiconductor film **113** (e.g. a low-temperature polysilicon film), an insulating film **114** covering the crystalline silicon semiconductor film **113**, and a gate electrode **115**A provided on top of the insulating film **114**. A portion of the insulating film **114** located between the crystalline silicon semiconductor film **113** and the gate electrode **115**A functions as a gate insulating film of the crystalline silicon TFT **110**A. The crystalline silicon semiconductor film **113** has a region (active region) **113**C in which a channel is formed and source and drain regions **113**S and **113**D located on both sides, respectively, of the active region. In this example, a portion of the crystalline silicon semiconductor film **113** that overlaps the gate electrode **115**A via the insulating film **114** serves as the active region **113**C. The crystalline silicon TFT **110**A also has source and drain electrodes **118**SA and **118**DA connected to the source and drain regions **113**S and **113**D, respectively. The source electrode **118**SA and the drain electrode **118**DA are provided on top of an insulating film **116** covering the gate electrode

115A, and are connected to the crystalline silicon semiconductor film **113** via a contact hole formed in the insulating films **114** and **116**.

[0042] The oxide semiconductor TFT **110**B has a gate electrode **115**B, an insulating film **116** covering a gate electrode **115**B, and an oxide semiconductor film **117** disposed on top of the insulating film **116**. The oxide semiconductor film **117** is formed on top of the insulating film **116**. A portion of the insulating film **116** located between the gate electrode **115**B and the oxide semiconductor film **117** functions as a gate insulating film of the oxide semiconductor TFT **110**B. The oxide semiconductor film **117** has a region (active region **117**C) in which a channel is formed and source contact and drain contact regions **117**S and **117**D located on both sides, respectively, of the active region. A portion of the oxide semiconductor film **117** that overlaps the gate electrode **115**B via the insulating film **116** serves as the active region **117**C. Further, the oxide semiconductor TFT **110**B has source and drain electrodes **118**SB and **118**DB connected to the source contact and drain contact regions **117**S and **117**D, respectively.

[0043] The TFTs **110**A and **110**B are covered with an insulating film **119** and a planarizing film **120**. In the oxide semiconductor TFT **110**B, the gate electrode **115**B, the source electrode **118**SB, and the drain electrode **118**DB are connected to a gate line (not illustrated), a source line **134**A (see FIG. **5**), and a pixel electrode **123**, respectively. The drain electrode **118**DB is connected to the corresponding pixel electrode **123** via a contact hole CH2 formed in the insulating film **119** and the planarizing film **120**. The source electrode **118**SB is supplied with an image signal via the source line **134**A, and a necessary charge is written into the pixel electrode **123** in accordance with a signal from the gate line. Further, a common electrode **121** is formed on top of the planarizing film **120**, and an insulating film **124** is formed between the common electrode **121** and the pixel electrode **123**.

[0044] The crystalline silicon TFT **110**A has a top-gate structure in which the crystalline silicon semiconductor film **113** is disposed between the gate electrode **115**A and the array substrate **122**. Meanwhile, the oxide semiconductor TFT **110**B (switching element) has a bottom-gate structure in which the gate electrode **115**B is disposed between the oxide semiconductor film **117** and the array substrate **122**. Employing such structures makes it possible to reduce the number of manufacturing steps and the cost of manufacturing in integrally forming two types of TFT **110**A and **110**B on top of the array substrate **122**. The crystalline silicon TFT **110**A and the oxide semiconductor TFT **110**B are not limited to the aforementioned TFT structures. For example, these TFTs **110**A and **110**B may have the same TFT structure. Alternatively, the crystalline silicon TFT **110**A may have a bottom-gate structure, and the oxide semiconductor TFT **110**B may have a top-gate structure. Further, in the case of a bottom-gate structure, it may be of a channel-etch type or an etch-stop type as in the case of the crystalline silicon TFT **110**A. Further, it may be of a bottom-contact type in which a source electrode and a drain electrode are located below a semiconductor layer.

[0045] The insulating film **116**, which serves as the gate insulating film of the oxide semiconductor TFT **110**B, is extended to a region in which the crystalline silicon TFT **110**A is formed, and functions as an interlayer insulating film that covers the gate electrode **115**A and crystalline silicon semiconductor film **113** of the crystalline silicon TFT **110**A. The gate electrode **115**A of the crystalline silicon TFT **110**A and the gate electrode **115**B of the oxide semiconductor TFT **110**B may be formed from the same type of conducting film. Further, the source and drain electrodes **118**SA and **118**DA of the crystalline silicon TFT **110**A and the source and drain electrodes **118**SB and **118**DB of the oxide semiconductor TFT **110**B may be formed from the same type of conducting film. The formation from the same type of conducting film makes it possible to further reduce the number of steps.

[0046] In the present embodiment, the oxide semiconductor layer **117** contains, for example, a semiconductor based on In-Ga—Zn—O hereinafter referred to as "In-Ga—Zn—O semiconductor"). In this example, the In-Ga—Zn—O semiconductor is a ternary oxide of In (indium), Ga (gallium), and Zn (zinc) and, without a particular limitation on the proportions (composition ratios) of In, Ga, and Zn, contains, for example, In:Ga:Zn=2:2:1, In:Ga:Zn=1:1:1, In:Ga:Zn=1:1:2, or the like. The semiconductor based on In-Ga—Zn—O may be amorphous or crystalline. A preferred example of a crystalline semiconductor based on In-Ga—Zn—O is a crystalline semiconductor based on In-Ga—Zn—O whose c axis is oriented substantially perpendicular to a layer plane. A crystal structure of such an In-Ga—Zn—O semiconductor is disclosed, for example, in Japanese Unexamined Patent Application Publication No. 2012-134475. The entire contents of Japanese Unexamined Patent Application Publication No. 2012-134475 are hereby incorporated by reference.

[0047] The oxide semiconductor layer **117** may contain another oxide semiconductor instead of the In-Ga—Zn—O semiconductor. For example, the oxide semiconductor layer **117** may contain a Zn—O semiconductor, an In—Zn—O semiconductor, a Zn—Ti—O semiconductor, a Cd—Ge—O semiconductor, a Cd—Pb—O semiconductor, a CdO (cadmium oxide), a Mg—Zn—O semiconductor, an In—Sn—Zn—O semiconductor (e.g. In_2O_3—SnO_2—ZnO), an In—Ga—Sn—O semiconductor, or the like. In the present embodiment, the color filter **50** is placed on top of the planarizing film **120**. A light-blocking conducting film **138** is placed closer to the liquid crystal layer (on the upper side of FIG. **6**) than the color filter **50**, and is placed in such a manner as to overlap a boundary portion **51** between two adjacent colored portions (in FIG. **6**, the colored portions **50**R and **50**G) of the plurality of colored portions **50**R, **50**G, and **50**B. The light-blocking conducting film **138** is sandwiched between the color filter **50** and the common electrode **121**, is electrically connected to the common electrode **121** by making surface contact with the common electrode **121**. That is, while Embodiment 1 described above has illustrated a configuration in which a light-blocking conducting film is placed at a higher level than a common electrode, the light-blocking conducting film **138** may be placed at a lower level than the common electrode **121**.

Embodiment 3

[0048] Next, Embodiment 3 of the present invention is described with reference to FIGS. **7** and **8**. A repeated description is omitted by assigning identical signs to components which are identical to those of the foregoing embodiments. The present embodiment differs from each of the foregoing embodiments in terms of a laminated structure on top of an array substrate **222**. On top of the array substrate

222 of the present embodiment, as shown in FIG. 7, an insulating film 241, a pixel electrode 242, an insulating film 243, and a common electrode 240 are stacked in this order on top of the color filter 50. The pixel electrode 242 is connected to the drain electrode 34D via a contact hole CH3 bored through the insulating films 35 and 241 and the planarizing film 36. A liquid crystal panel 211 according to the present embodiment has both a display function of displaying an image and a touch panel function (position input function) of detecting a position (input position) that a user inputs on the basis of an image that is displayed, and is integrated (by in-cell technology) with a touch panel pattern for fulfilling the touch panel function. The touch panel pattern adopts a so-called projection capacitive scheme, and a detection scheme of the touch panel pattern is a self-capacitance scheme. As shown in FIG. 8, the touch panel pattern is constituted by a plurality of position detection electrodes 240A arranged in a matrix within a board surface of the array substrate 222.

[0049] When a user of the liquid crystal display device moves his/her finger (position input body; not illustrated), which is a conductor, nearer to a surface (display surface) of the liquid crystal panel 211, electrostatic capacitances are formed between the finger and the touch electrodes 240A. As a result, an electrostatic capacitance that is detected by a touch electrode 240A located near the finger is different from that which is detected by a touch electrode 240A located away from the finger. This makes it possible to detect an input position on the basis of the difference. Moreover, the position detection electrodes 240A are constituted by the common electrode 240 provided on the array substrate 222. A light-blocking conducting film 238 is placed in such a manner as to overlap a boundary portion 51 between two adjacent colored portions (in FIG. 7, the colored portions 50R and 50G) of the plurality of colored portions 50R, 50G, and 50B. Further, as shown in FIG. 7, a conducting film 239 may be sandwiched between the light-blocking conducting film 238 and the color filter 50 in order to improve adhesion between the light-blocking conducting film 238 and the color filter 50.

[0050] In a place in the insulating films 241 and 243 that overlaps the light-blocking conducting film 238, a contact hole CH4 is formed in such a manner as to pass through the insulating films 241 and 243. The common electrode 240 is connected to the light-blocking conducting film 238 via the contact hole CH2. As shown in FIG. 8, the light-blocking conducting film 238 extends along a direction of extension of the source line 34A (Y-axis direction), and is electrically connected to the driver 17. The common electrode 24 is much larger in size than the pixel electrode 242 (pixel unit) in plan view, and is disposed in an range across pluralities of (e.g. approximately several tens or hundreds of) the pixel electrodes 242 in the X-axis direction and the Y-axis direction.

[0051] This makes it possible to use the light-blocking conducting film 238 as wires that are capable of transmitting signals to the position detection electrodes 240A. The source line 34A is connected to the driver 17, and the gate line 31A is connected, for example, to a gate driver 218 provided on the array substrate 222. The light-blocking conducting film 238 supplies the position detection electrodes 240A at different timings with a reference potential signal pertaining to the display function and a touch signal (position detection signal) pertaining to the touch function. This reference potential signal is transmitted to all of the light-blocking conducting films 238 at the same timing, and all of the position detection electrodes 240 are brought to a reference potential to function as the common electrode 240.

Embodiment 4

[0052] Next, Embodiment 4 of the present invention is described with reference to FIG. 9. A repeated description is omitted by assigning identical signs to components which are identical to those of the foregoing embodiment. The present embodiment differs from each of the foregoing embodiments in terms of a laminated structure on top of an array substrate 322. On top of the array substrate 322 of the present embodiment, as shown in FIG. 9, a pixel electrode 242, an insulating film 243, and a common electrode 240 (position detection electrode 240A) are stacked in this order on top of the color filter 50. The pixel electrode 242 is connected to the drain electrode 34D via a contact hole CH5 bored through the insulating film 35 and the planarizing film 36. As in the case of Embodiment 3 described above, the light-blocking conducting film 238 is placed in such a manner as to overlap a boundary portion 51 between two adjacent colored portions (in FIG. 9, the colored portions 50R and 50G) of the plurality of colored portions 50R, 50G, and 50B.

[0053] In a place in the insulating film 243 that overlaps the light-blocking conducting film 238, a contact hole CH6 is formed in such a manner as to pass through the insulating film 243. The common electrode 240 is connected to the light-blocking conducting film 238 via the contact hole CH6. Further, the present embodiment differs from Embodiment 3 (see FIG. 7) described above in that the pixel electrode 242 is placed at a lower level than the light-blocking conducting film 238. In the present embodiment, a transparent electrode film 339 is sandwiched between the light-blocking conducting film 238 and the color filter 50. The transparent electrode film 339 is placed at the same level as and made of the same material as the pixel electrode 242, and is formed at the same time as the pixel electrode 242 in the step of forming the pixel electrode 242. The transparent electrode film 339 bears the function of improving adhesion between the light-blocking conducting film 238 and the color filter 50. Further, stacking the transparent electrode film 339 and light-blocking conducting film 238 makes it possible to reduce interconnection resistance. The transparent electrode film 339 does not need to be sandwiched between the light-blocking conducting film 238 and the color filter 50.

Embodiment 5

[0054] Next, Embodiment 5 of the present invention is described with reference to FIG. 10. A repeated description is omitted by assigning identical signs to components which are identical to those of the foregoing embodiment. As shown in FIG. 10, the present embodiment differs from Embodiment 4 described above in that the light-blocking conducting film 238 is placed at a lower level than the transparent electrode film 339. Placing the light-blocking conducting film 238 at a lower level than the transparent electrode film 339 makes it hard for the light-blocking conducting film 238 to be affected by heat generated by an annealing process that is performed after the formation of the contact hole CH6. As a result of this, the annealing

process can be performed at a higher temperature, and a reduction in resistance of the transparent electrode film **339** can be achieved. Further, placing the transparent electrode film **339** at a higher level than the light-blocking conducting film **238** makes it possible to more surely prevent corrosion of the light-blocking conducting film **238**.

[0055] Embodiment 4 described above is configured such that as shown in FIG. **9**, the light-blocking conducting film **238** is placed at a higher level than the transparent electrode film **339** (and the pixel electrode **242**). In this way, a conducting film that constitutes the transparent electrode film **339** (and the pixel electrode **242**) and a conducting film that constitutes the light-blocking conducting film **238** can be continuously formed, and after that, the light-blocking conducting film **238** and the transparent electrode film **339** (and the pixel electrode **242**) can be formed in this order by etching. On the other hand, in Embodiment 5, the formation of the conducting film that constitutes the light-blocking conducting film **238** and the formation of the light-blocking conducting film **238** by etching need to be followed by the formation of the conducting film that constitutes the transparent electrode film **339** (and the pixel electrode **242**) and the formation of the transparent electrode film **339** (and the pixel electrode **242**) by etching. That is, Embodiment 4 is advantageous over Embodiment 5 in terms of making it possible to reduce the number of steps, and Embodiment 5 is advantageous in terms of making it possible to reduce the resistance of the transparent electrode film **339** and prevent corrosion of the light-blocking conducting film **238**.

[0056] Alternatively, as shown in a modification of FIG. **11**, the transparent electrode film **339** may be placed in such a manner as to cover a side surface of the light-blocking conducting film **238**. This makes it possible to make the light-blocking conducting film **238** more resistant to corrosion and heat. The configuration shown in FIG. **10** is more advantageous than the configuration of FIG. **11** in terms of making it possible to etch the light-blocking conducting film **238** and the transparent electrode film **339** with the same mask and making it possible to reduce the width of the transparent electrode film **339**.

OTHER EMBODIMENTS

[0057] The present invention is not limited to the embodiments described above with reference to the drawings. The following embodiments may be included in the technical scope of the present invention.

[0058] (1) The materials of each conducting film and each insulating film are not limited to the materials illustrated in the foregoing embodiments but may be changed as appropriate.

[0059] (2) Each of the foregoing embodiments may be configured such that the light-blocking conducting film is placed on a side of the color filter opposite to the liquid crystal layer and the light-blocking conducting film and the common electrode are connected to each other via a contact hole bored through the color filter. When Embodiments 3 and 4 are configured such that the light-blocking conducting film **238** is placed on a side of the color filter **50** opposite to the liquid crystal layer, the distance in the Z-axis direction between the light-blocking conducting film **238**, which serves as a wire, and the common electrode **240**, which is not connected to the light-blocking conducting film **238**, is greater by the thickness of the color filter **50**. This causes a smaller parasitic capacitance to be formed between the light-blocking conducting film **238** and the common electrode **240**, bringing about improvement in position detection sensitivity.

REFERENCE SIGNS LIST

[0060] **10** Liquid crystal display device
[0061] **21** Counter substrate (which constitutes a pair of substrates)
[0062] **22**, **122**, **222** Array substrate (first substrate)
[0063] **23** Liquid crystal layer
[0064] **34**A Source line
[0065] **34**S Source electrode
[0066] **38**, **138**, **238** Light-blocking conducting film
[0067] **40** Common electrode
[0068] **41** Insulating film
[0069] **42**, **242** Pixel electrode
[0070] **43** TFT (switching element)
[0071] **50** Color filter
[0072] **50**R, **50**G, **50**B Colored portion
[0073] **110**B Oxide semiconductor TFT (switching element)
[0074] **240**A Position detection electrode (common electrode)

1. A liquid crystal display device comprising:
a pair of substrates placed opposite each other;
a liquid crystal layer placed between the two substrates;
a plurality of switching elements provided on a first one of the two substrates;
a plurality of pixel electrodes provided on the first substrate, electrically connected to the plurality of switching elements, respectively, and placed closer to the liquid crystal layer than the plurality of switching elements;
a common electrode, provided on the first substrate, at least a part of which overlaps the pixel electrodes via an insulating film;
a color filter, provided on the first substrate, placed between the switching elements and the pixel electrodes, and placed in such a manner as to overlap each of the plurality of pixel electrodes, that includes a plurality of colored portions that exhibit different colors from one another; and
a light-blocking conducting film provided on the first substrate, placed closer to the liquid crystal layer than the switching elements while having a light blocking effect, placed in such a manner as to overlap a boundary portion between two adjacent colored portions of the plurality of colored portions, and electrically connected to the common electrode.

2. The liquid crystal display device according to claim **1**, wherein the light-blocking conducting film is placed closer to the liquid crystal layer than the color filter.

3. The liquid crystal display device according to claim **1**, wherein the light-blocking conducting film makes surface contact with the common electrode.

4. The liquid crystal display device according to claim **1**, wherein the common electrode serves as a position detection electrode that forms an electrostatic capacitance with a position input body which performs a position input and that detects a position input performed by the position input body, and
the light-blocking conducting film is a wire that is capable of transmitting a signal to the position detection electrode.

5. The liquid crystal display device according to claim **1**, wherein each of the switching elements includes a source electrode,

the first substrate is provided with a source line that is electrically connected to the source electrode, and

the light-blocking conducting film is placed in such a manner as to overlap the source line.

6. The liquid crystal display device according to claim **1**, wherein each of the switching elements is a TFT including an oxide semiconductor.

7. The liquid crystal display device according to claim **6**, wherein the oxide semiconductor contains indium (In), gallium (Ga), zinc (Zn), and oxygen (O).

* * * * *

专利名称(译)	液晶显示装置		
公开(公告)号	US20200201095A1	公开(公告)日	2020-06-25
申请号	US16/619645	申请日	2018-06-01
[标]申请(专利权)人(译)	夏普株式会社		
申请(专利权)人(译)	夏普株式会社		
当前申请(专利权)人(译)	夏普株式会社		
[标]发明人	CHIKAMA YOSHIMASA NISHIMURA JUN HIRATA YOSHIHARU		
发明人	CHIKAMA, YOSHIMASA NISHIMURA, JUN HIRATA, YOSHIHARU		
IPC分类号	G02F1/135 G06F3/044		
CPC分类号	G02F2001/1351 G06F3/044 G02F1/1354 G06F3/0443 G02F1/1368 G06F3/041		
优先权	2017114107 2017-06-09 JP		
外部链接	Espacenet USPTO		

摘要(译)
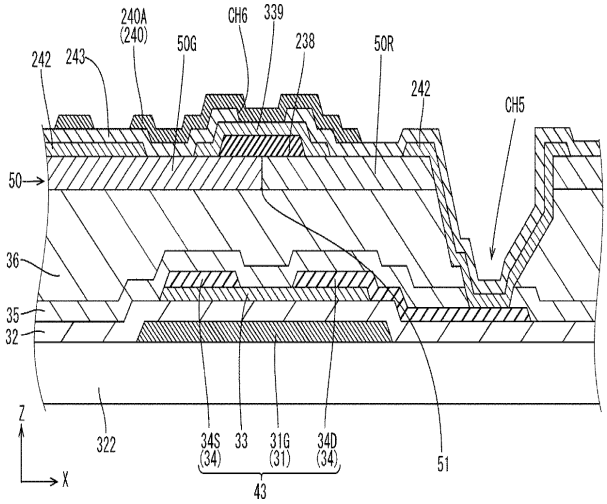
本发明的液晶显示装置包括：一对基板；以及一对基板。 液晶层； 多个TFT； 多个像素电极； 以通过绝缘膜与像素电极重叠的方式放置的公共电极； 滤色器设置在TFT与像素电极之间，并且以与多个像素电极中的每一个重叠的方式设置，该滤色器包括彼此呈现不同颜色的多个着色部分； 以及设置在阵列基板上的遮光导电膜，该遮光导电膜设置成与多个TFT的两个相邻的着色部分之间的边界部分重叠，并且具有遮光的效果，并且比TFT更靠近液晶层。 着色部分，并电连接到公共电极。