US 20120200799A1

(19) United States

(12) Patent Application Publication

MIYAMOTO et al.

(10) Pub. No.: US 2012/0200799 A1

(43) Pub. Date: Aug. 9, 2012

(54) LIQUID CRYSTAL DISPLAY DEVICE

(75) Inventors: **Kenichi MIYAMOTO**, Kumamoto (JP); **Masami HAYASHI**, Tokyo (JP); **Manabu TANAHARA**, Kumamoto (JP); **Masaru AOKI**, Kumamato (JP)

(73) Assignee: **MITSUBISHI ELECTRIC CORPORATION**, Chiyoda-ku (JP)

(21) Appl. No.: **13/450,849**

(22) Filed: **Apr. 19, 2012**

Related U.S. Application Data

(62) Division of application No. 12/432,320, filed on Apr. 29, 2009, now Pat. No. 8,208,103.

(30) **Foreign Application Priority Data**

Apr. 30, 2008 (JP) 2008-118345

Publication Classification

(51) **Int. Cl.**
G02F 1/1339 (2006.01)

(52) **U.S. Cl.** **349/58**

(57) **ABSTRACT**

A liquid crystal display device has pixel electrodes including a transmissive pixel electrode and a reflective pixel electrode. The liquid crystal display device includes a TFT array substrate, an opposing substrate, a sealing material that bonds both substrates, an organic film formed on the TFT array substrate and having a thick film portion provided below the pixel electrode and a thin film portion provided outside the thick film portion, a columnar spacer formed on the opposing substrate and holding substrate gap between the both substrates, and a gap retaining pad formed in a region outside the display region and inside the sealing material to adjust the substrate gap outside the display region according to the substrate gap on the pixel electrode. The columnar spacer holds the substrate gap between both substrates over the gap retaining pad and over the pixel electrode.

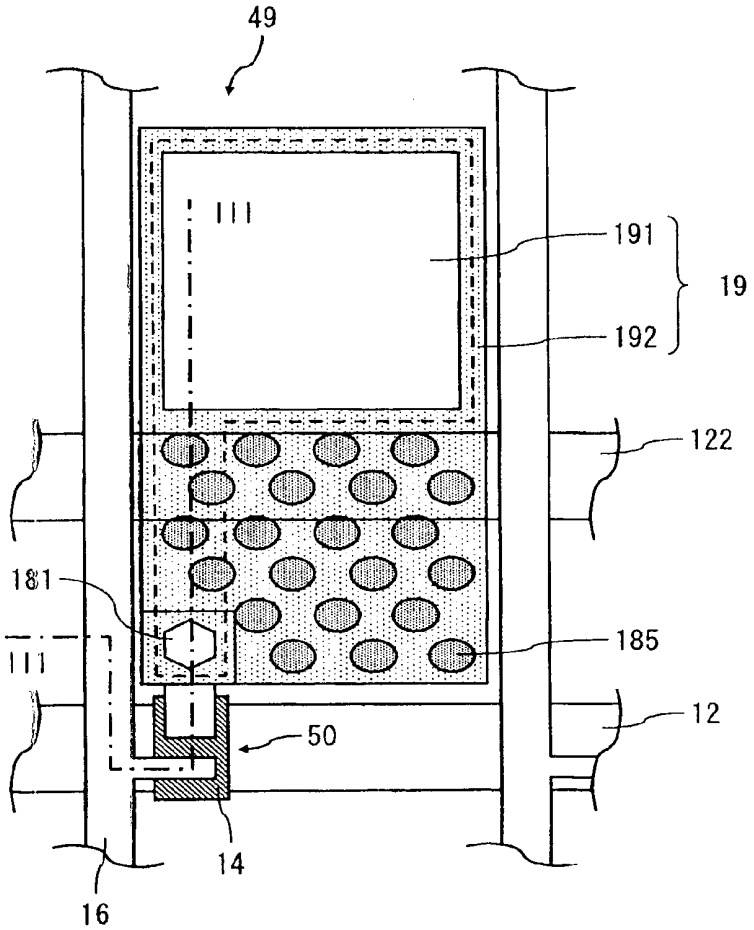

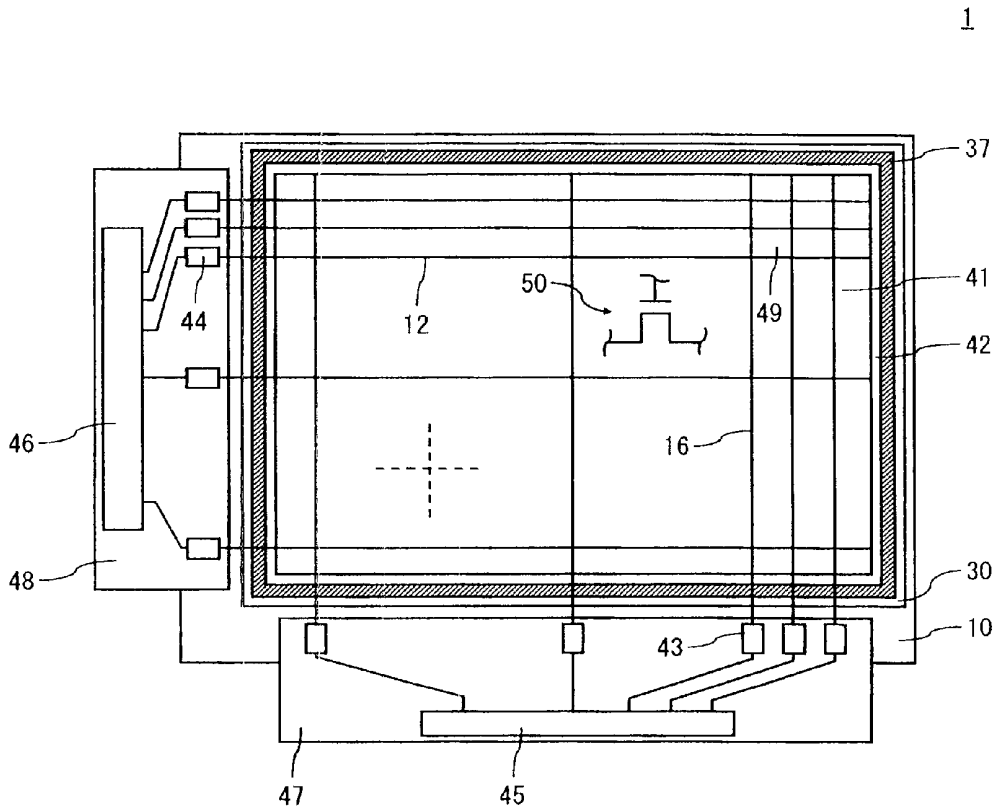

Fig. 1

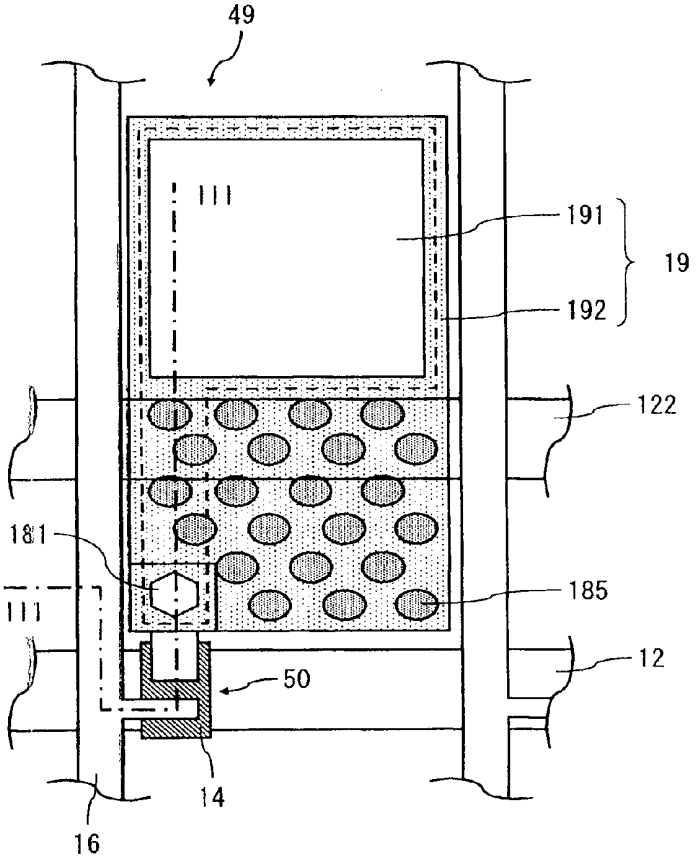
49
111
191
192
19
122
181
185
111
12
50
14
16

Fig. 2

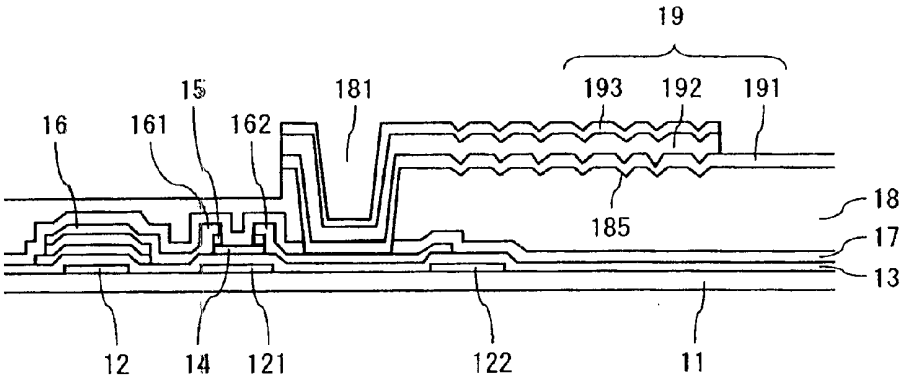
19
193
192
191
15
181
16
161
162
18
185
17
13
12
14
121
122
11

Fig. 3

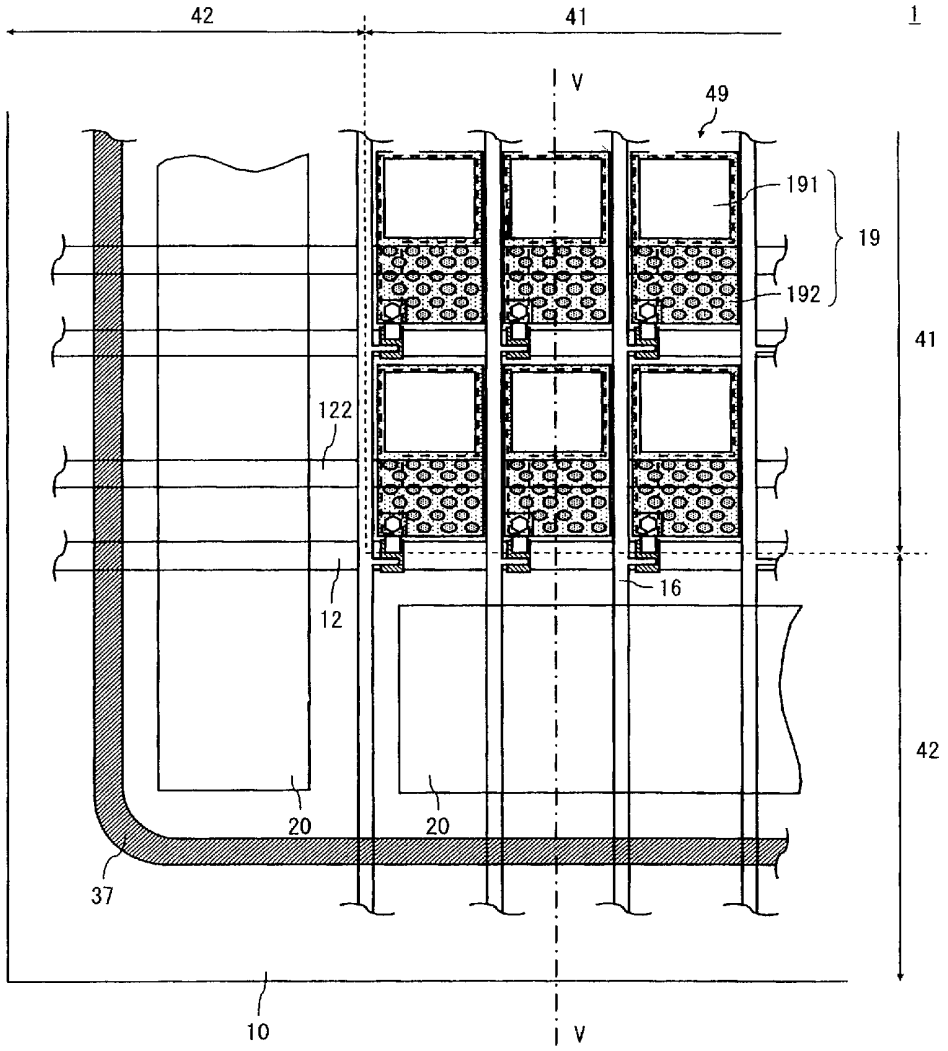

Fig. 4

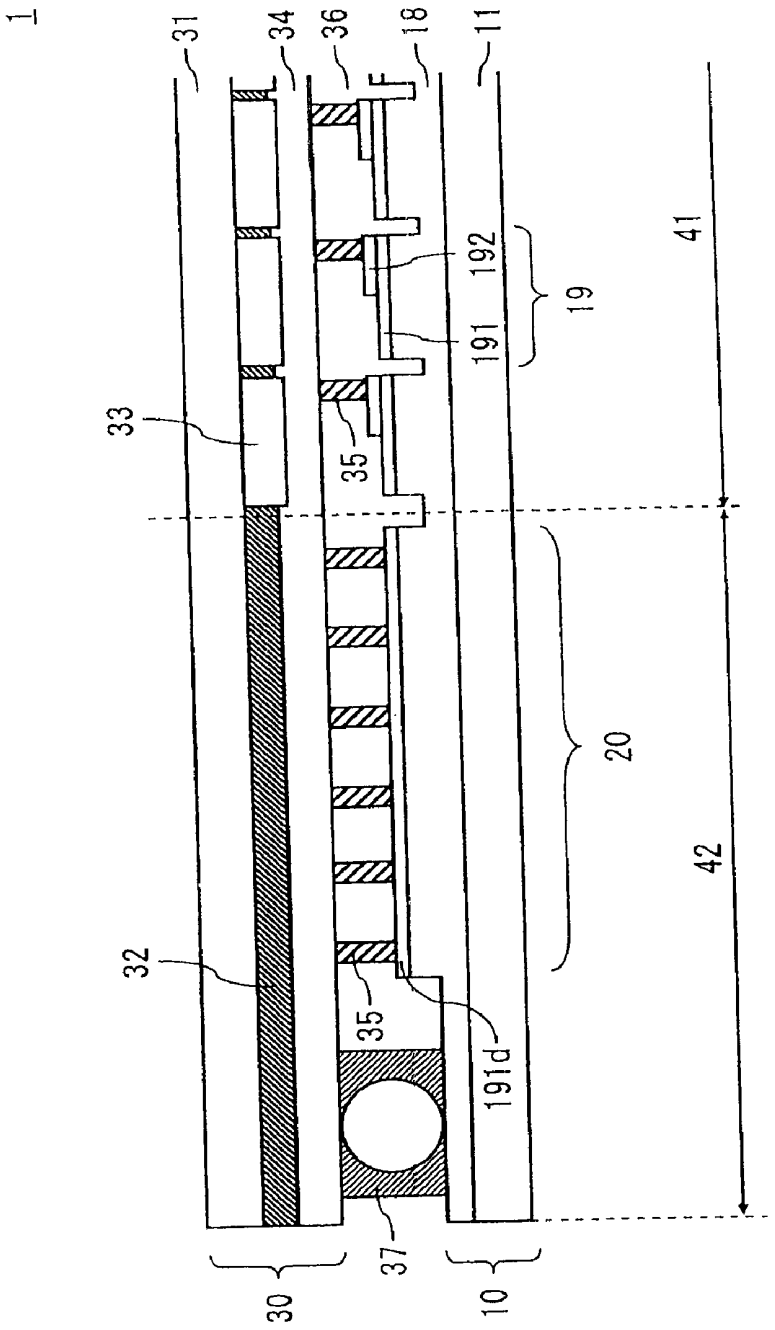

Fig. 5

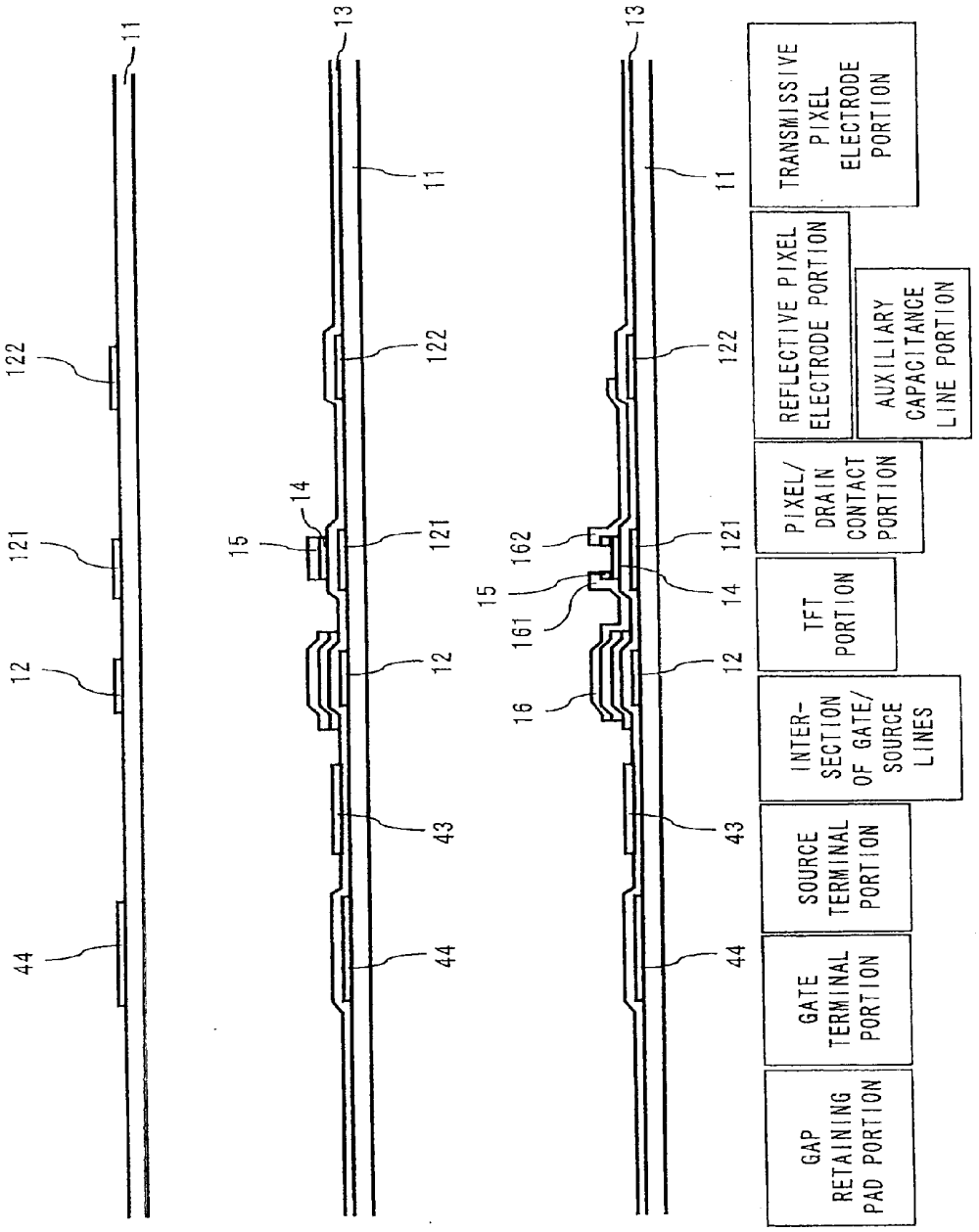

Fig. 6A

Fig. 6B

Fig. 6C

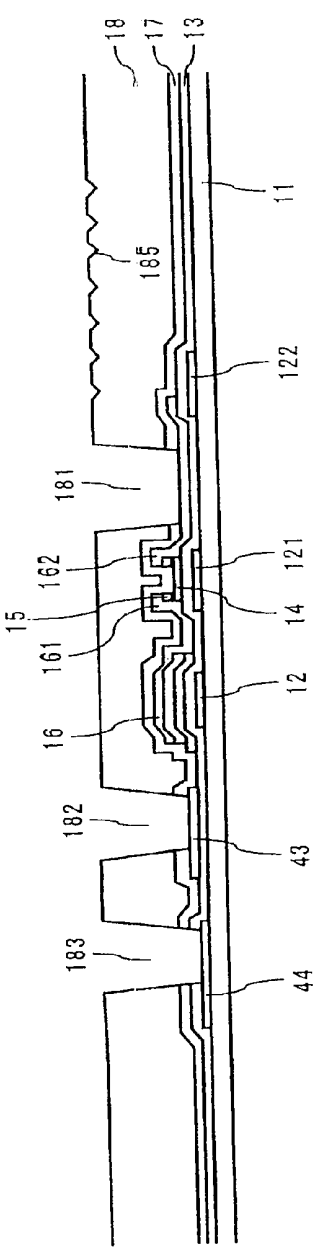
18
17
13
11
185
122
181
162
121
15
14
161
12
16
182
43
183
44

Fig. 6D

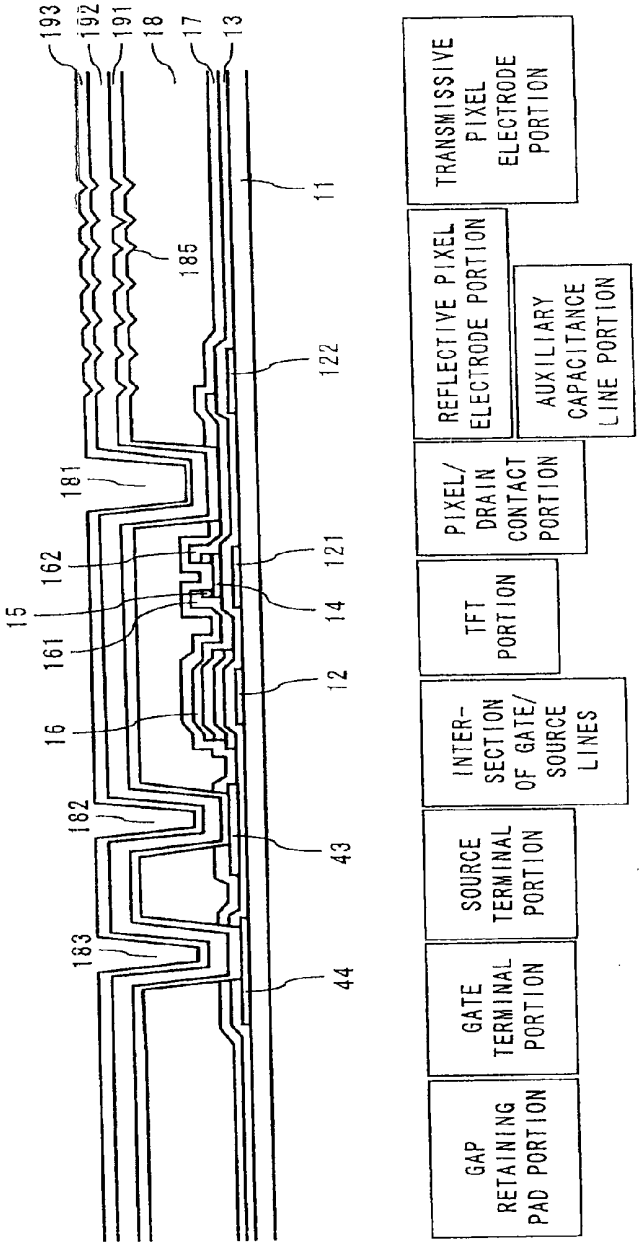
193
192
191
18
17
13
11
185
122
181
162
121
15
14
161
12
16
182
43
183
44
TRANSMISSIVE PIXEL ELECTRODE PORTION
REFLECTIVE PIXEL ELECTRODE PORTION
AUXILIARY CAPACITANCE LINE PORTION
PIXEL/ DRAIN CONTACT PORTION
TFT PORTION
INTER-SECTION OF GATE/ SOURCE LINES
SOURCE TERMINAL PORTION
GATE TERMINAL PORTION
GAP RETAINING PAD PORTION

Fig. 6E

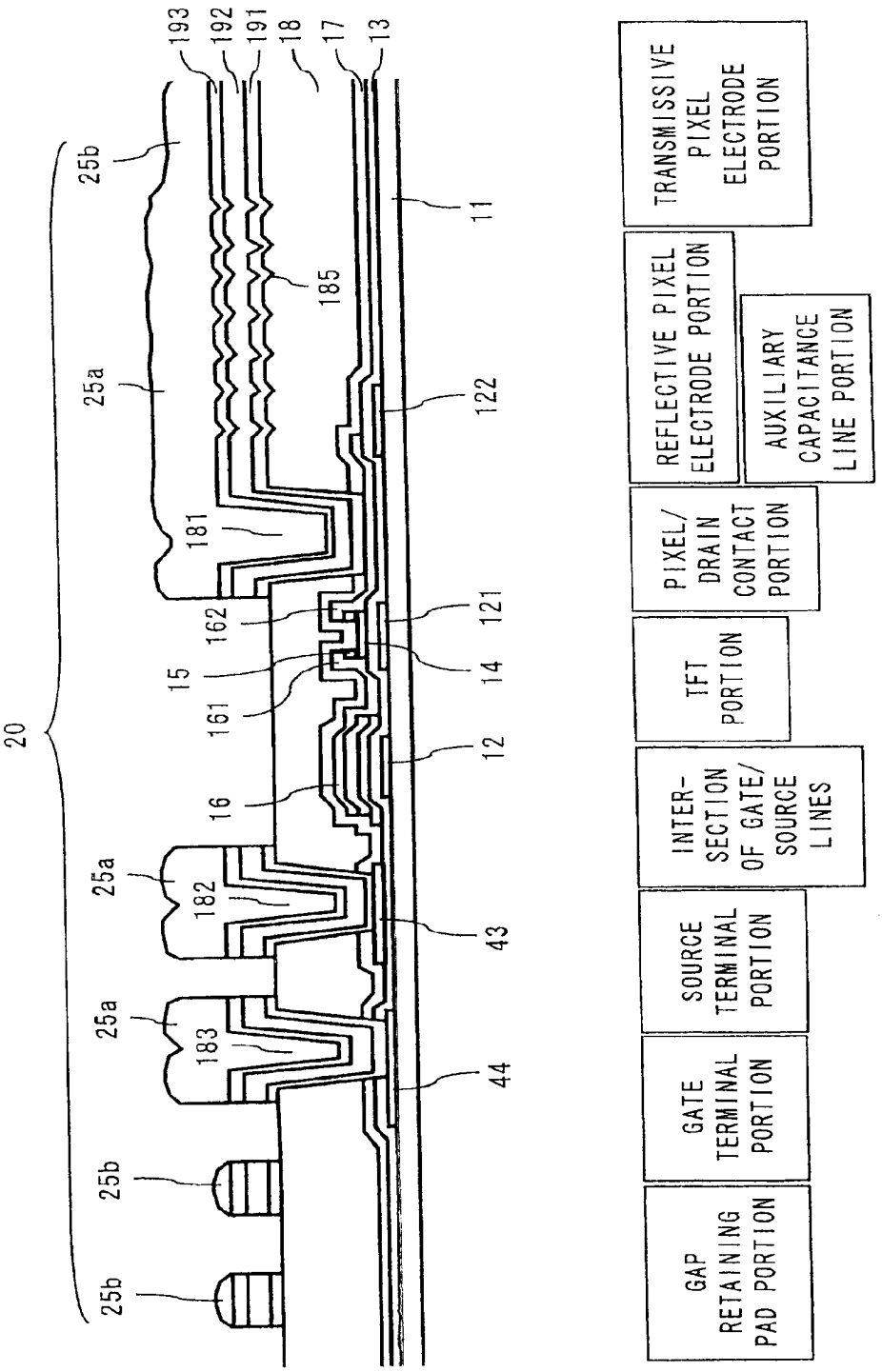
20
25b
25a
193
192
191
18
17
13
11
185
122
181
162
121
15
14
161
12
16
182
43
183
44
TRANSMISSIVE PIXEL ELECTRODE PORTION
REFLECTIVE PIXEL ELECTRODE PORTION
AUXILIARY CAPACITANCE LINE PORTION
PIXEL/ DRAIN CONTACT PORTION
TFT PORTION
INTER-SECTION OF GATE/ SOURCE LINES
SOURCE TERMINAL PORTION
GATE TERMINAL PORTION
GAP RETAINING PAD PORTION

Fig. 6F

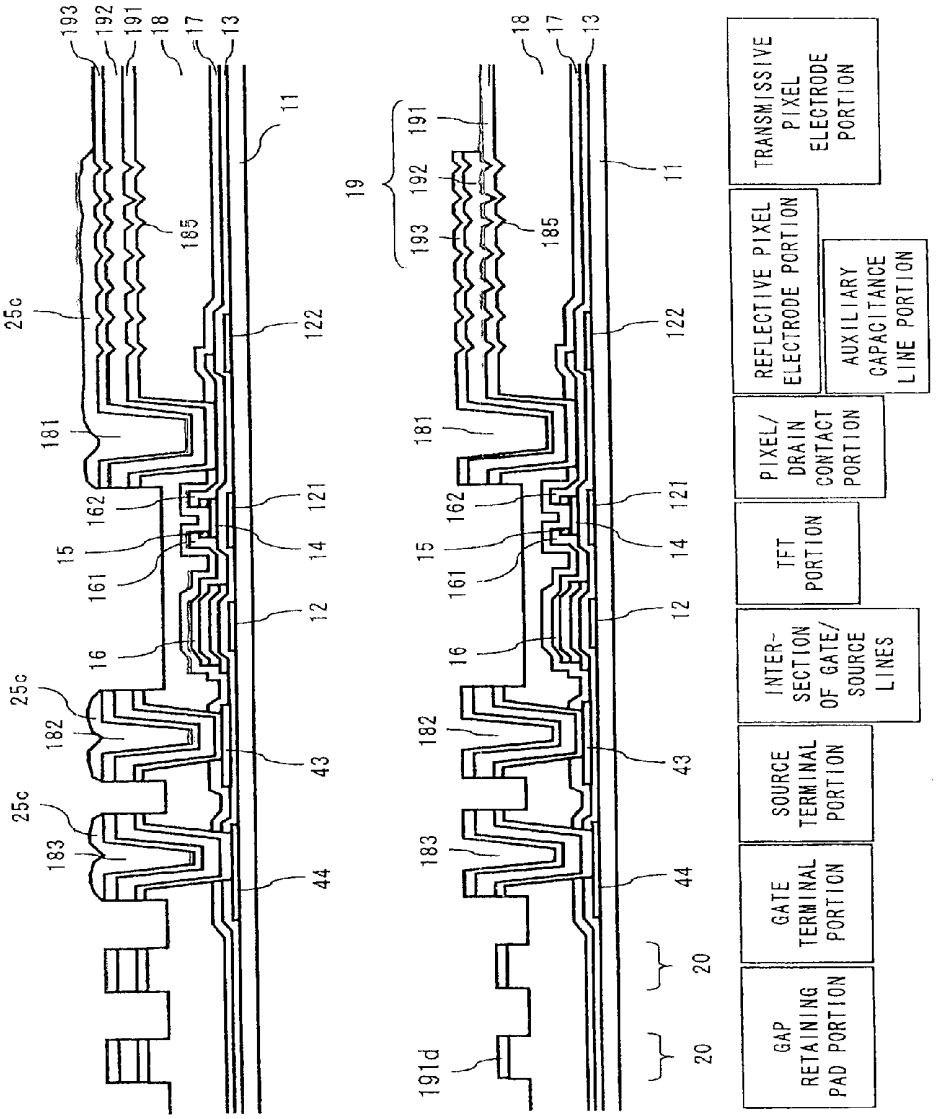
193
192
191
18
17
13
11
185
25c
122
181
162
121
15
161
14
12
16
182
43
183
44
19
191d
20
TRANSMISSIVE PIXEL ELECTRODE PORTION
REFLECTIVE PIXEL ELECTRODE PORTION
AUXILIARY CAPACITANCE LINE PORTION
PIXEL/ DRAIN CONTACT PORTION
TFT PORTION
INTER-SECTION OF GATE/ SOURCE LINES
SOURCE TERMINAL PORTION
GATE TERMINAL PORTION
GAP RETAINING PAD PORTION

Fig. 6G

Fig. 6H

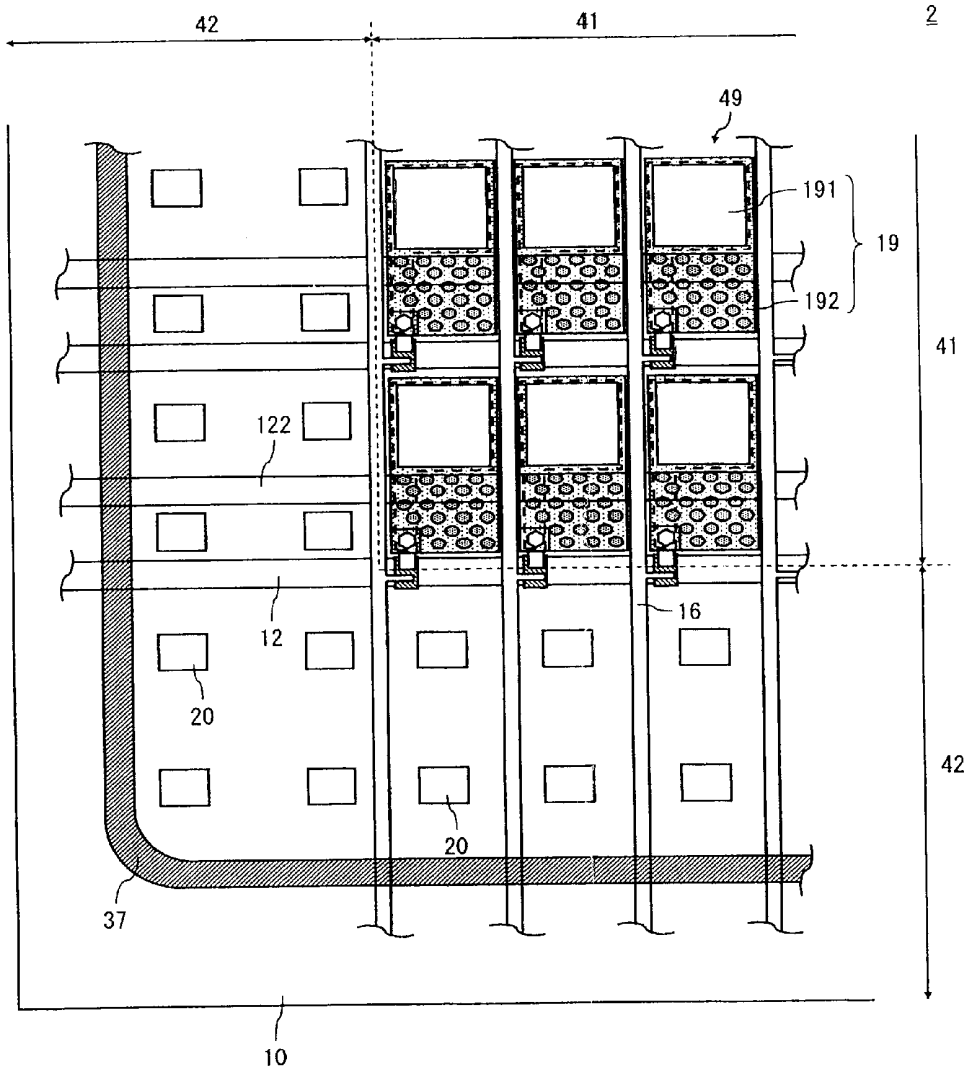

Fig. 7

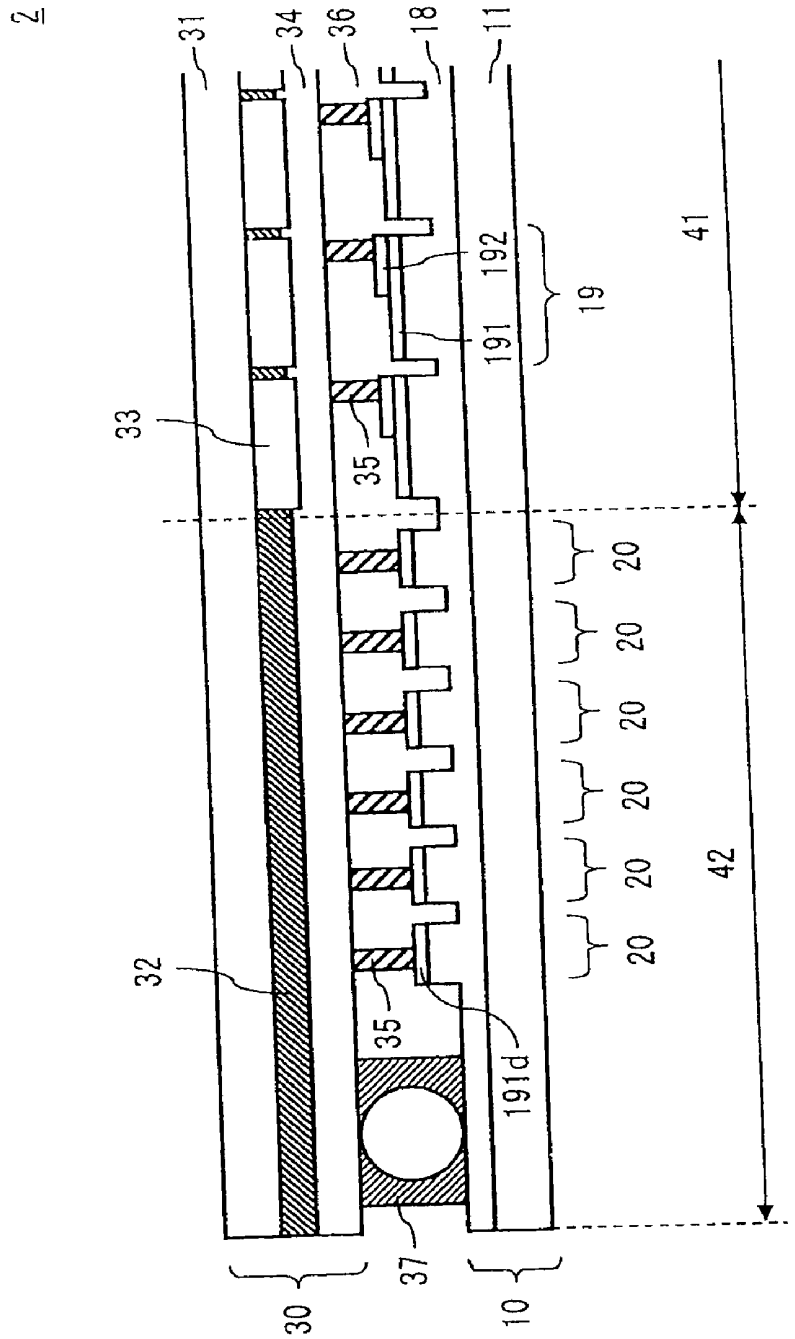
2
31
34
36
18
11
33
32
35
35
192
191
19
41
42
20
20
20
20
20
20
191d
37
30
10

Fig. 8

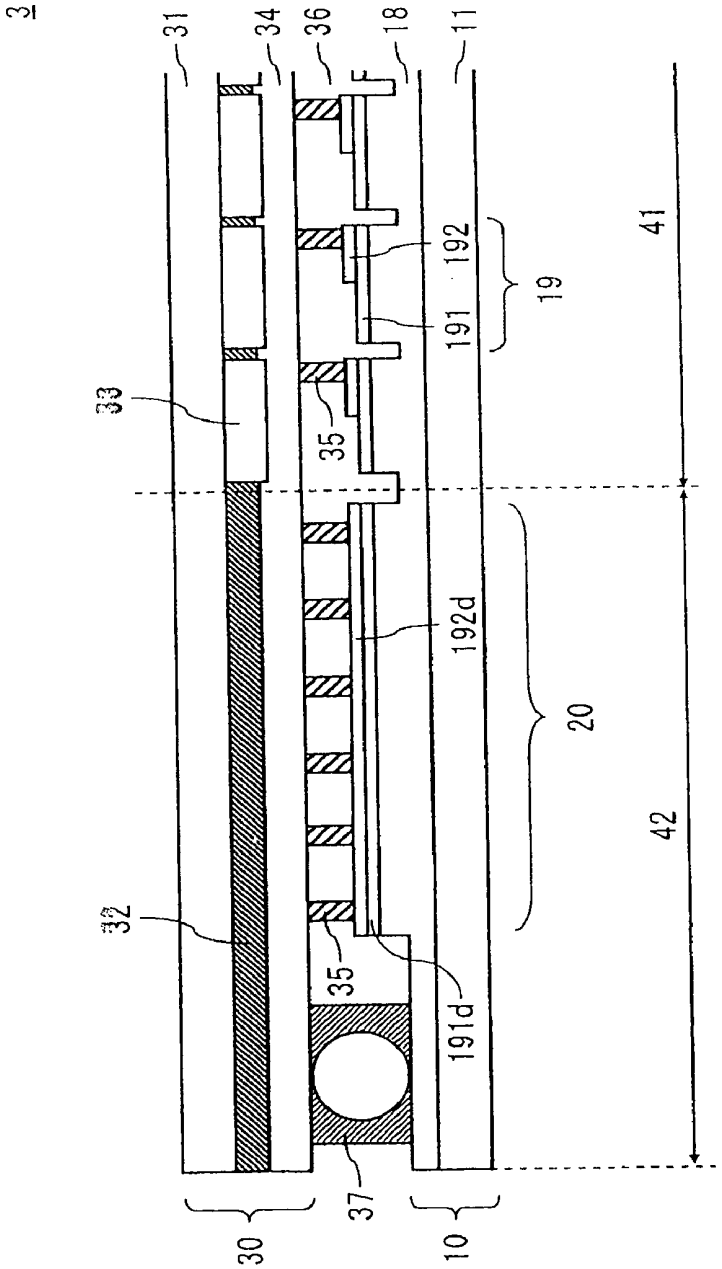

Fig. 9

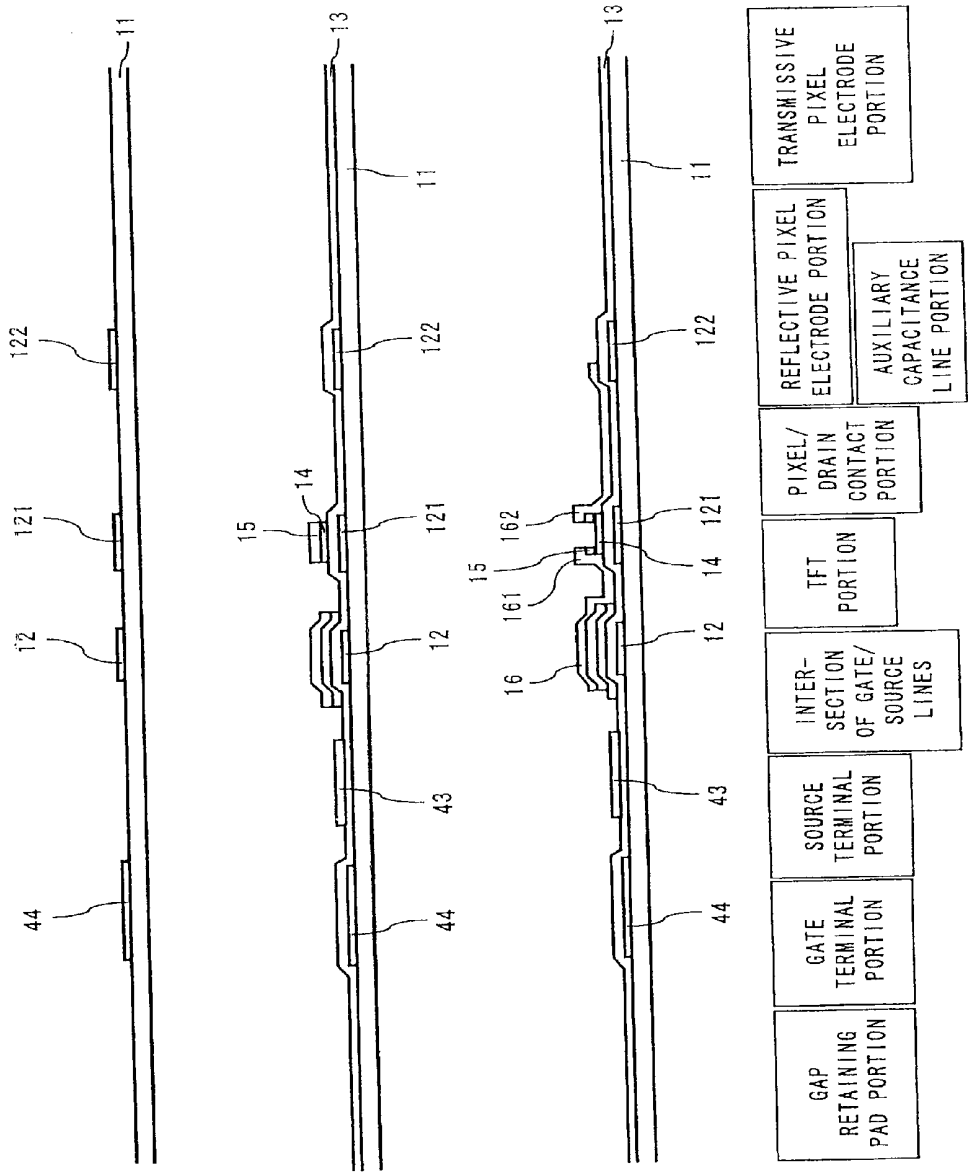

Fig. 10A

Fig. 10B

Fig. 10C

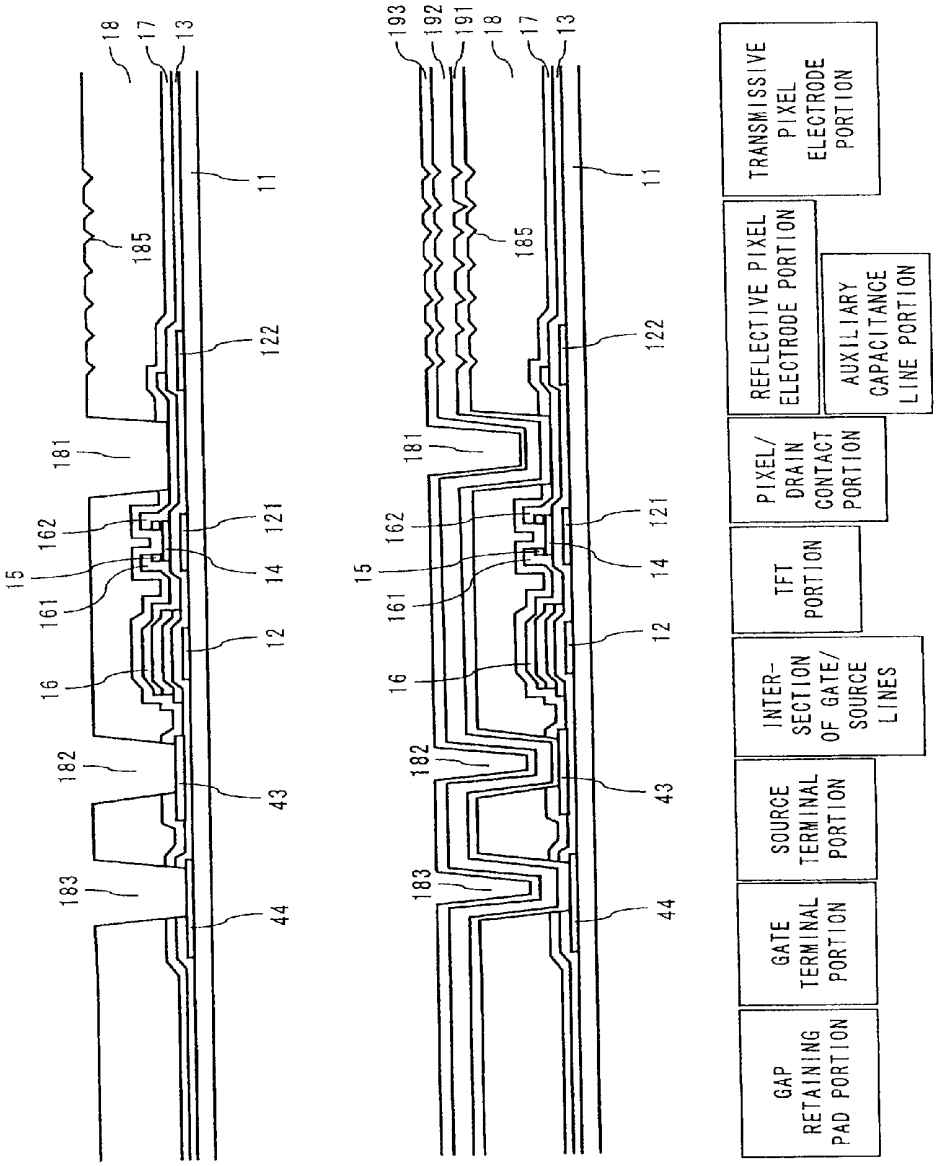

Fig. 10D

Fig. 10E

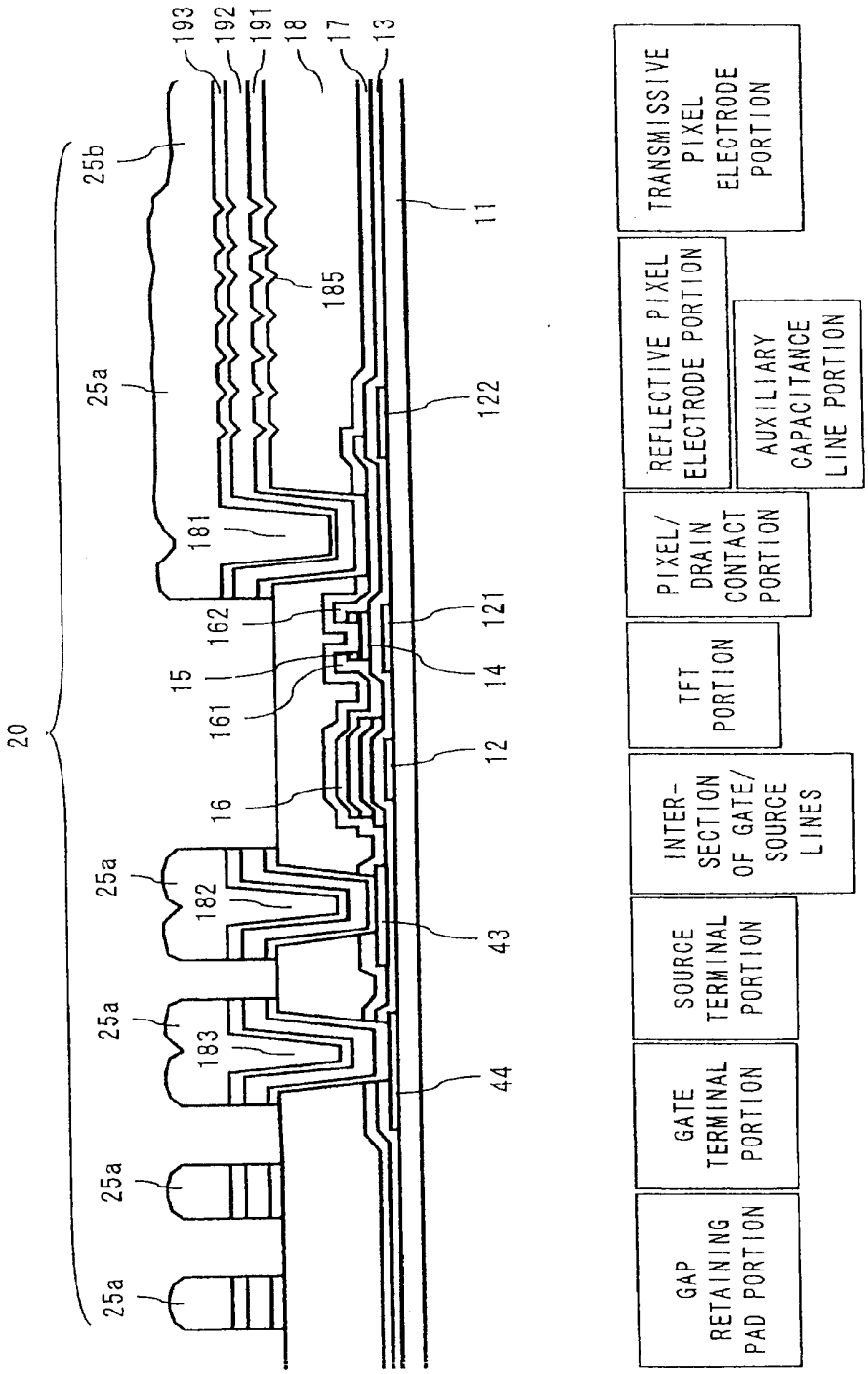
20
25a
25b
193
192
191
18
17
13
11
185
122
181
162
121
15
14
161
12
16
182
43
183
44
TRANSMISSIVE PIXEL ELECTRODE PORTION
REFLECTIVE PIXEL ELECTRODE PORTION
AUXILIARY CAPACITANCE LINE PORTION
PIXEL/ DRAIN CONTACT PORTION
TFT PORTION
INTER-SECTION OF GATE/ SOURCE LINES
SOURCE TERMINAL PORTION
GATE TERMINAL PORTION
GAP RETAINING PAD PORTION

Fig. 10F

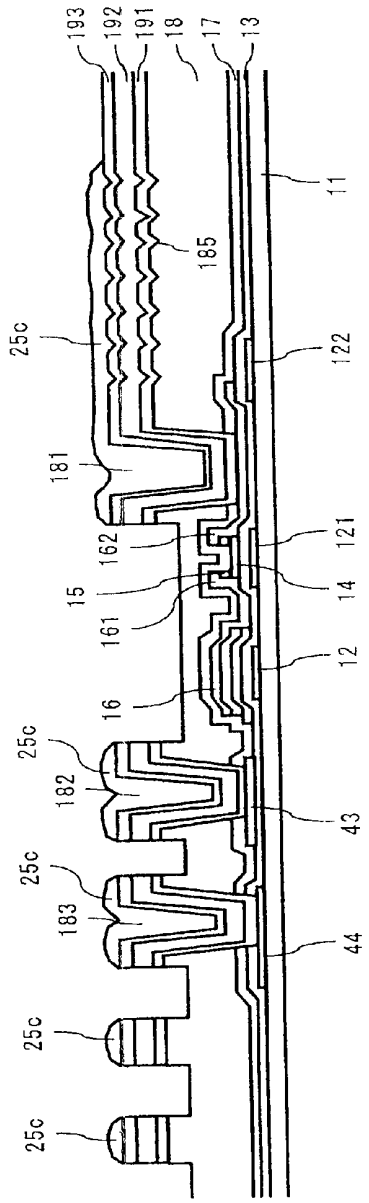

Fig. 10G

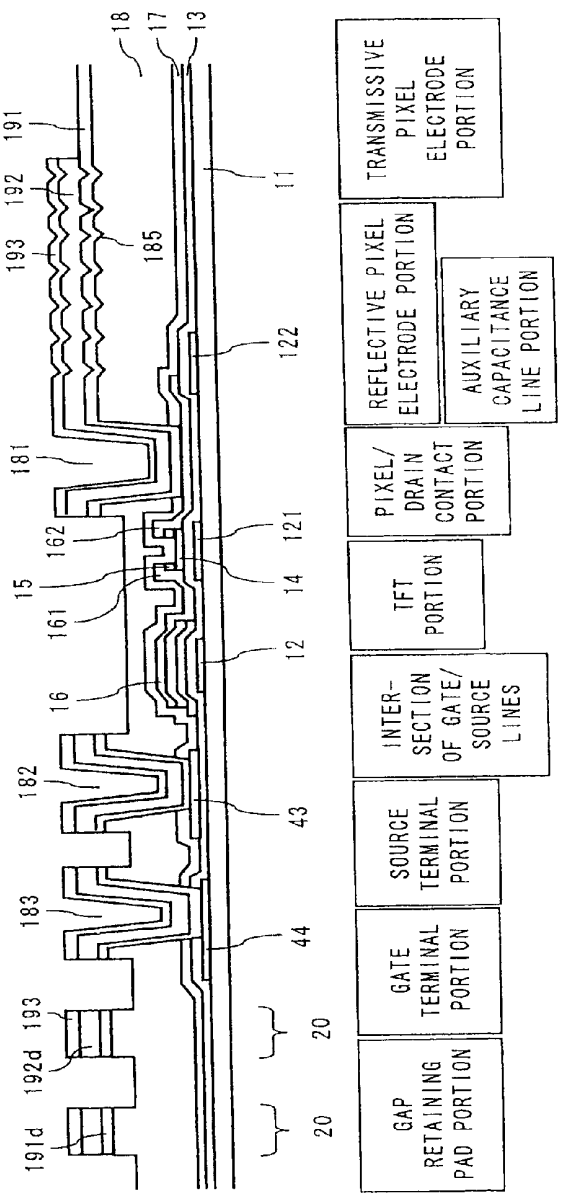

Fig. 10H

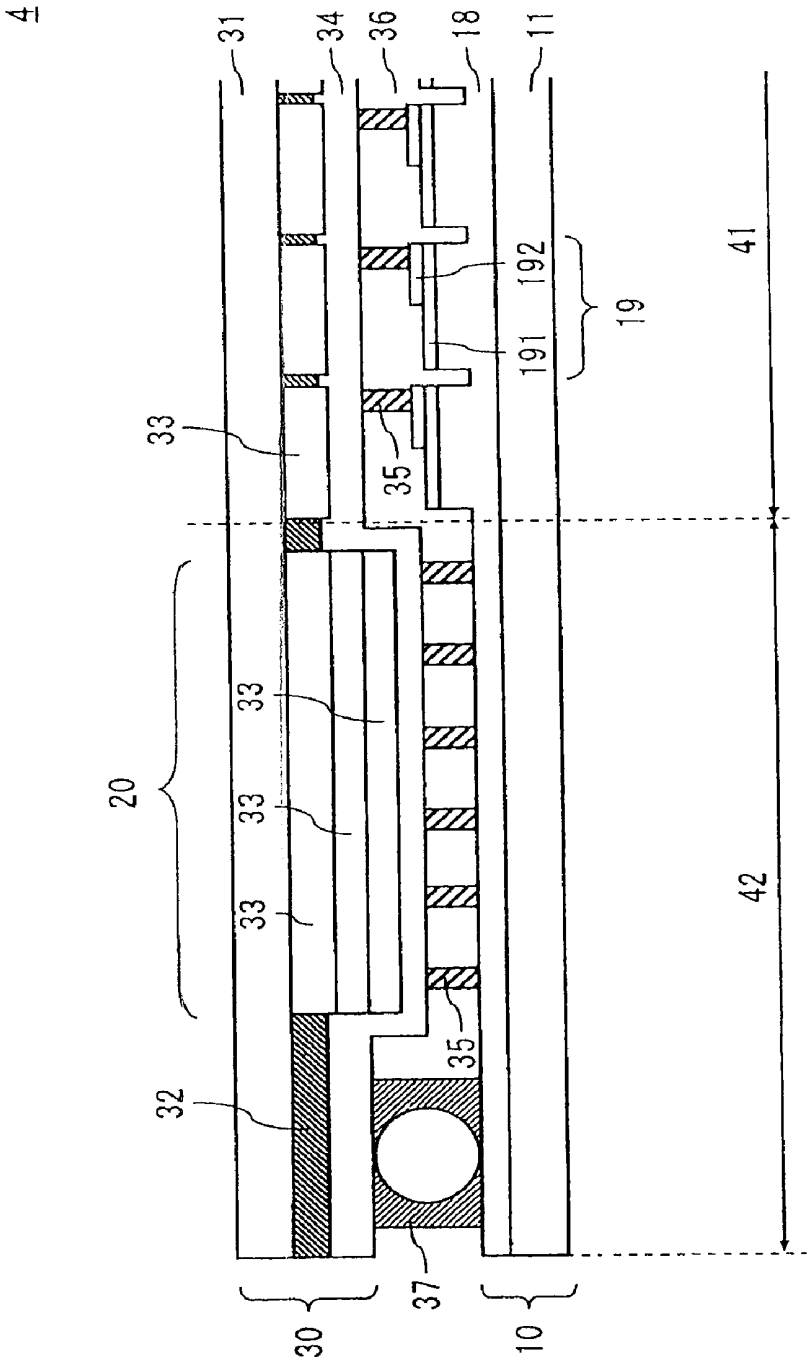

Fig. 11

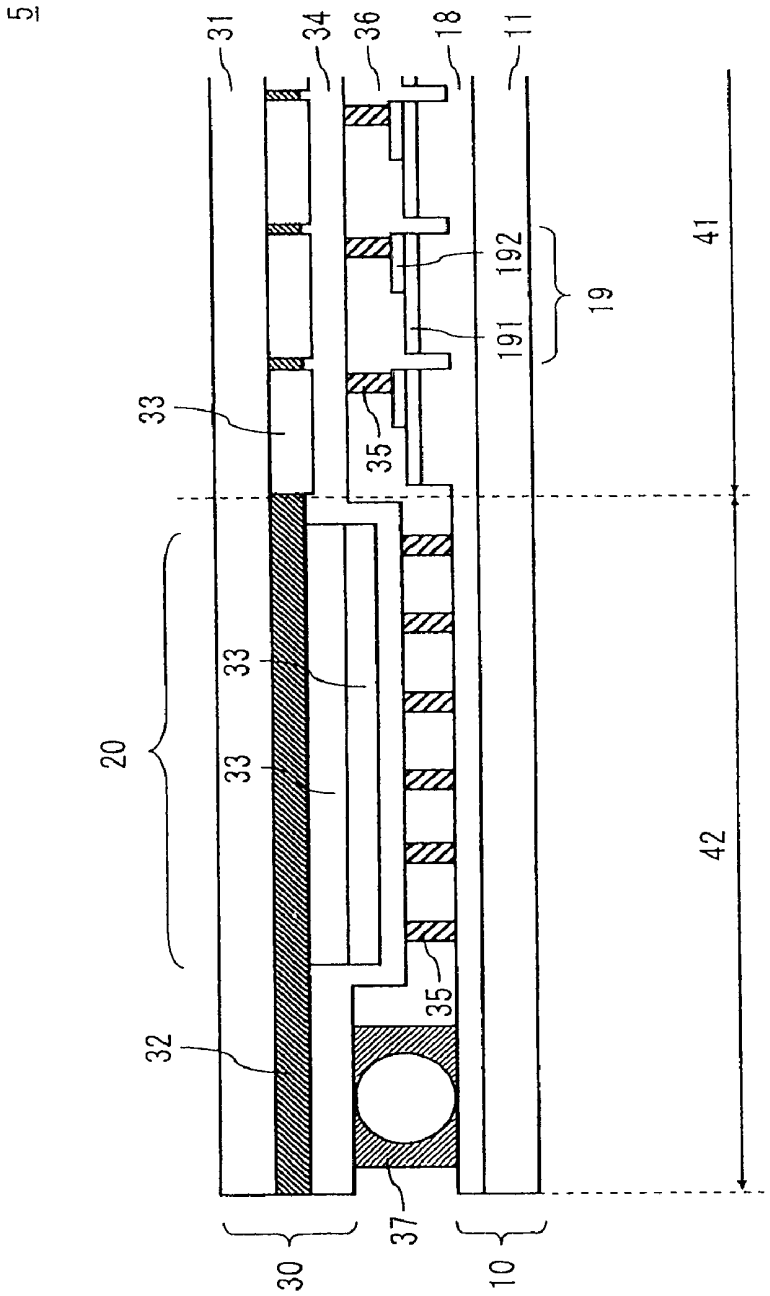

Fig. 12

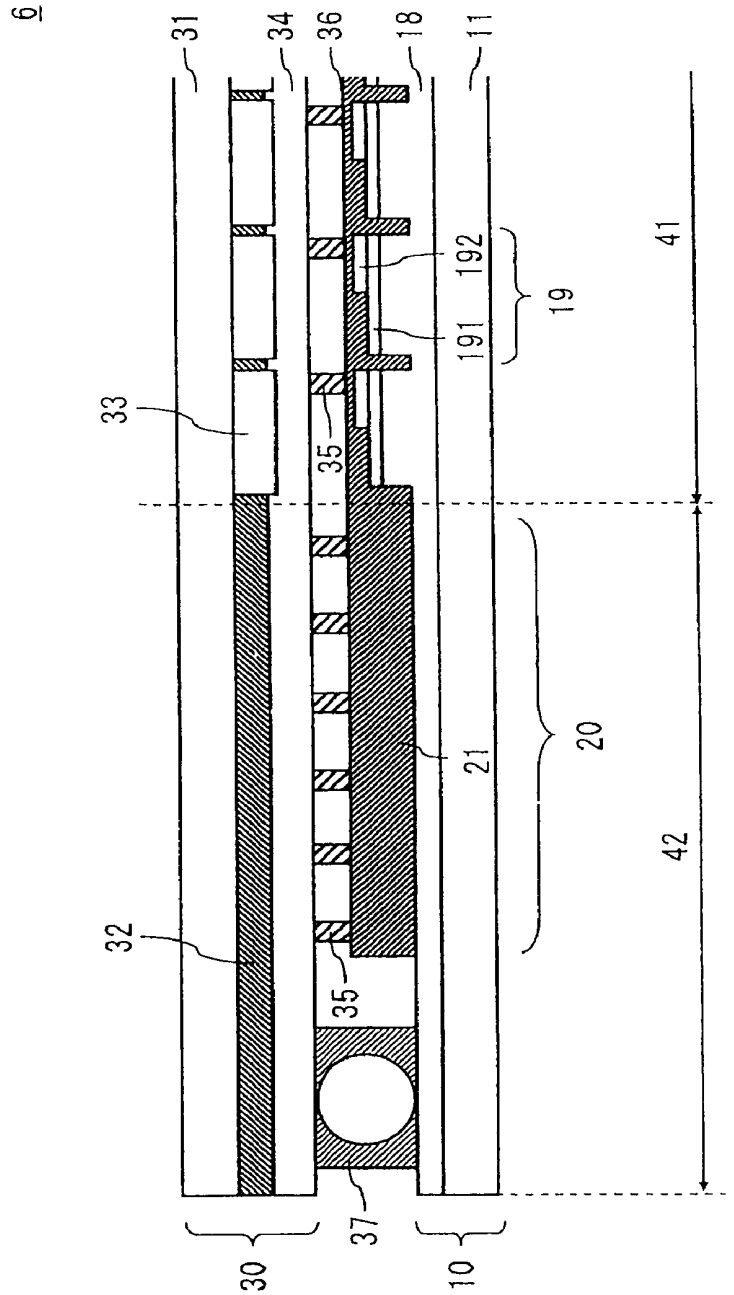

Fig. 13

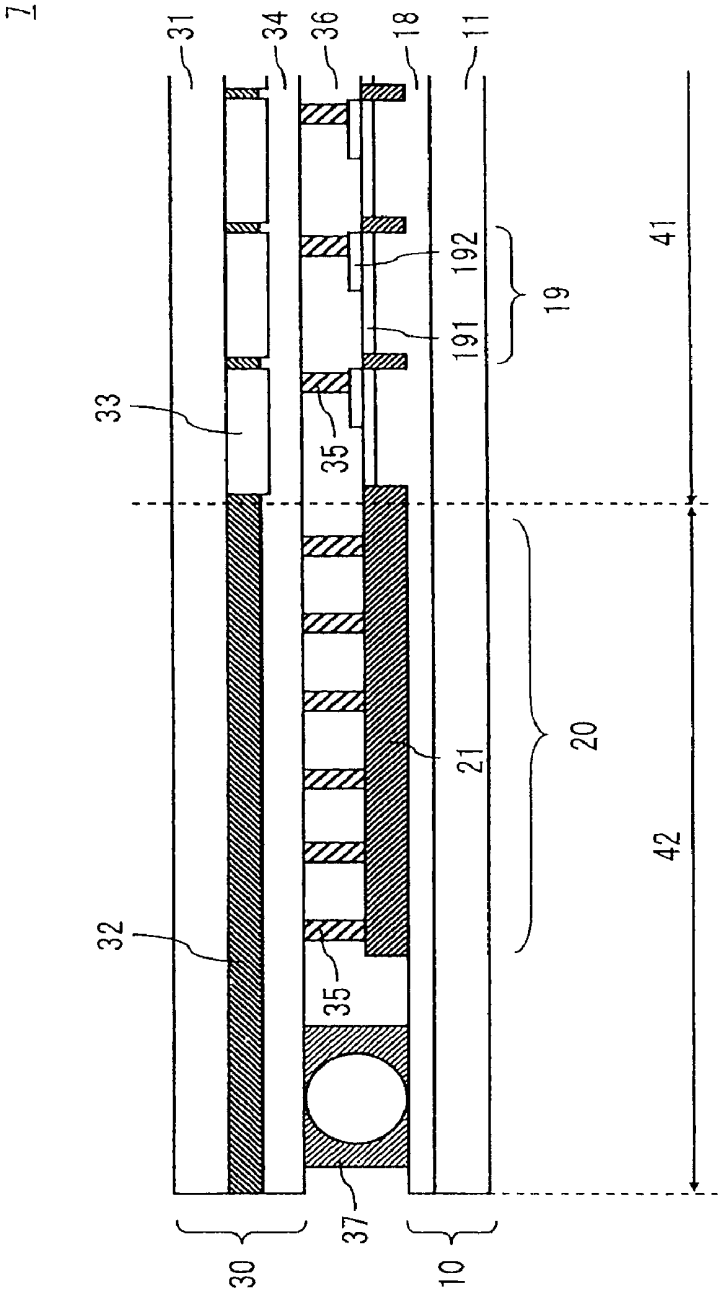

Fig. 14

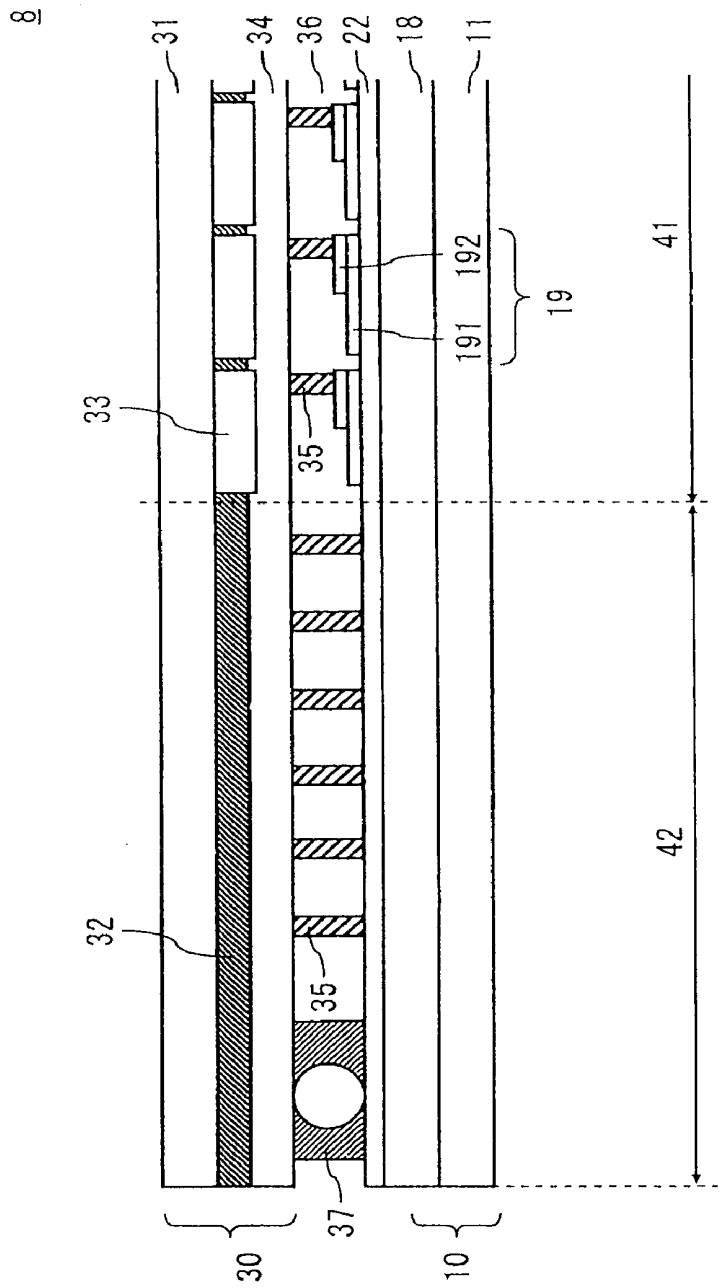

Fig. 15

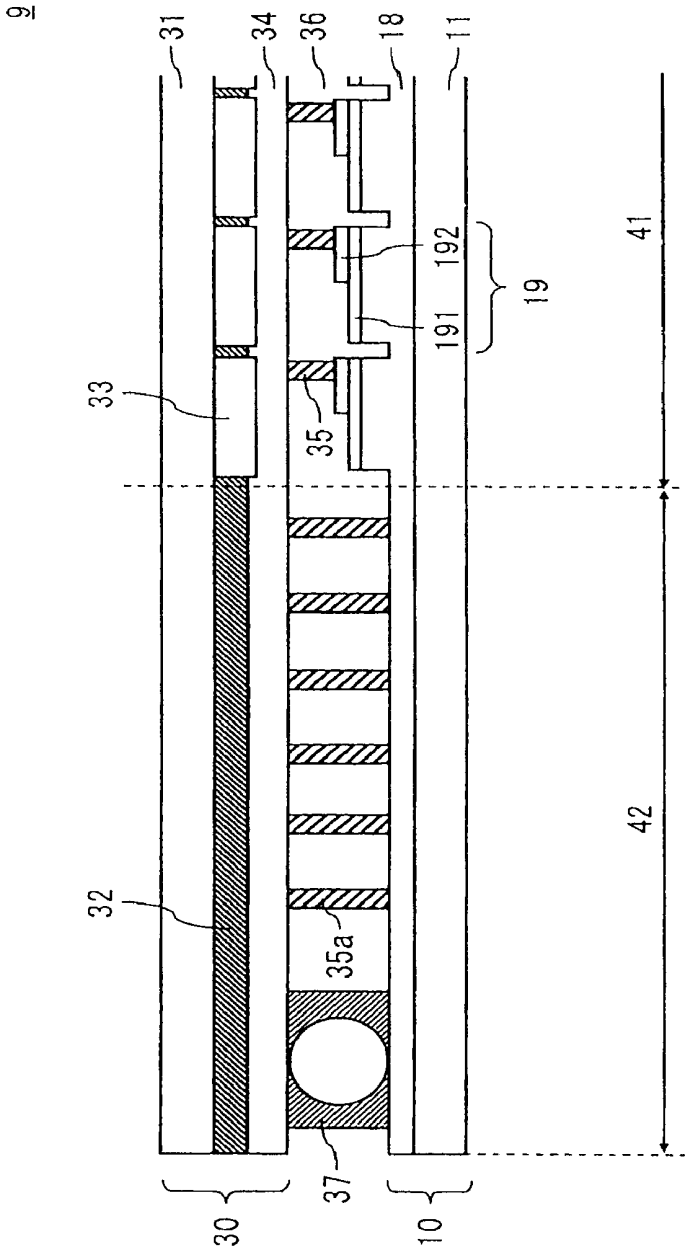

Fig. 16

RELATED ART

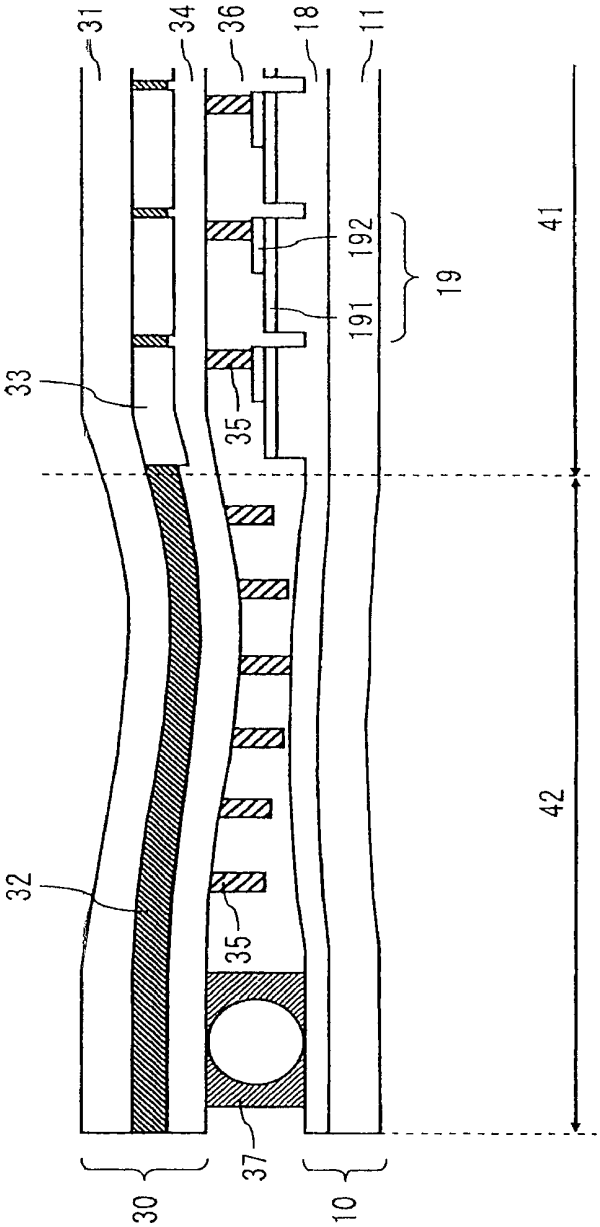

Fig. 17

LIQUID CRYSTAL DISPLAY DEVICE

[0001] The present application is a divisional application of U.S. patent application Ser. No. 12/432,320, filed on Apr. 29, 2009, which claims priority under 37 C.F.R. §119 to Japanese application no. 2008-118345 filed Apr. 30, 2008, the entire contents of each of which are incorporated herein by reference.

BACKGROUND OF THE INVENTION

[0002] 1. Field of the Invention

[0003] The present invention relates to a liquid crystal display device.

[0004] 2. Description of Related Art

[0005] A display device using a liquid crystal has been broadly applied to a product that consumes low power and is thin type as one of flat panel displays used in place of a CRT.

[0006] A liquid crystal display device (LCD) includes a simple matrix type LCD and a TFT-LCD that uses a thin film transistor (TFT) as a switching element. The TFT-LCD is superior to the CRT or the simple matrix type LCD in terms of portability and display quality, and has been broadly used in a lap top computer and so on. In general, in the TFT-LCD, a liquid crystal layer is disposed between a TFT array substrate having the TFT formed thereon in array and an opposing substrate. Then, a polarizing plate is placed on the outer surfaces of the opposing substrate and the TFT array substrate, and a light source is further provided on one side. By having such a structure, excellent display can be realized in the TFT-LCD.

[0007] The TFT-LCD includes a reflective type TFT-LCD that displays images by reflecting a light that is externally incident by a reflector in addition to a transmissive type TFT-LCD that displays images by transmitting a light of a backlight embedded as a light source. Further, there is also a transflective TFT-LCD that uses both the transmissive and reflective methods. In the transflective liquid crystal display device, reflection of daylight is used under bright ambient light, and a backlight is used under dark ambient light, and thus, excellent display characteristics can be obtained under both indoor and outdoor circumstances. In recent years, as mobile display devices have been widely used, there has been a growing demand on the transflective TFT-LCD panel for a small-sized display such as a portable telephone and a portable music player, and a medium-sized display such as a portable video player, a PDA, and an in-vehicle navigation.

[0008] In the TFT-LCD, the TFT needs to be formed on a glass substrate to have an array shape using a semiconductor technique in manufacturing the TFT array substrate, which requires large number of processes. As such, large number of devices are needed for the manufacture and the manufacturing cost becomes high. Especially, in the transflective TFT-LCD, both of the reflective pixel electrode and the transmissive pixel electrode need to be formed, which increases the manufacturing cost as larger number of processes are required compared with the general transmissive TFT-LCD or the reflective TFT-LCD.

[0009] For example, Japanese Unexamined Patent Application Publication No. 2005-215277 discloses a technique of reducing the number of photomasks used for manufacturing the TFT array substrate of the transflective TFT-LCD. In Japanese Unexamined Patent Application Publication No. 2005-215277, the reflective pixel electrode and the transmissive pixel electrode of the pixel electrode are formed by one photolithography using a halftone exposure technique. Accordingly, the TFT array substrate that is conventionally formed by six photolithography processes can be formed by five photolithography processes in Japanese Unexamined Patent Application Publication No. 2005-215277, which means the number of photomasks can be reduced.

[0010] When the reflective pixel electrode and the transmissive pixel electrode are formed by one photolithography using the method disclosed in Japanese Unexamined Patent Application Publication No. 2005-215277, after forming the transparent conductive layer to serve as the transmissive pixel electrode and the reflective metal layer to serve as the reflective pixel electrode, the resist pattern having a difference in film thickness is firstly formed. The reflective metal layer is etched using the resist pattern having a difference in film thickness as a mask. Next, the thin film portion of the resist pattern having a difference in film thickness is removed by oxygen plasma processing. After that, the transparent conductive layer is etched using the reflective metal layer and the resist pattern in which the thin film portion is removed as masks. Then, the reflective metal layer is etched again using the resist pattern in which the thin film portion is removed as a mask. As such, the reflective metal layer of the transmissive pixel portion is removed to form the reflective pixel electrode and the transmissive pixel electrode.

[0011] In general, in order to remove the thin film portion of the resist pattern having a difference in film thickness, ashing for oxidatively decomposing the resist by a dry etcher such as oxygen plasma processing, for example, is performed. However, according to the method disclosed in Japanese Unexamined Patent Application Publication No. 2005-215277, the ashing is carried out with a state in which the transparent conductive layer is exposed on the surface, which may cause abnormal discharge. The abnormal discharge causes damage not only to the transparent conductive layer but also to an organic film provided therebelow. Further, failure may be caused such as disconnection of a line provided in a lower layer.

[0012] On the other hand, there is also a method of removing the exposed transparent conductive layer in advance before the ashing in order to prevent the abnormal discharge in the ashing. More specifically, the transparent conductive layer and the reflective metal layer are etched using the resist pattern having a difference in film thickness as a mask, followed by the ashing, and then, the reflective metal layer is etched again using the resist pattern where the thin film portion is removed as a mask. As is similar to the method disclosed in Japanese Unexamined Patent Application Publication No. 2005-215277, this method also enables to form the reflective pixel electrode and the transmissive pixel electrode by one photolithography.

[0013] However, according to this method, the transparent conductive layer is removed, and thus, the underlayer organic film is exposed on the surface. In the transflective liquid crystal display device, the organic film having a concave and convex pattern on the surface is provided below the pixel electrode in order to obtain excellent scattering characteristics. The thickness of the organic film of the exposed portion is decreased as is similar to the resist pattern due to the ashing to remove the thin film portion of the resist pattern having a difference in film thickness. Accordingly, the film thickness of the organic film covered with the transparent conductive

layer and the film thickness of the organic film which is not covered with the transparent conductive layer greatly vary with each other.

[0014] A cross sectional view of the related liquid crystal display device using the thus-formed TFT array substrate is shown in FIG. **17**. In FIG. **17**, a TFT array substrate **10** and an opposing substrate **30** are arranged opposite to each other. Then, a liquid crystal layer **36** is disposed in a space with a sealing material **37** that bonds the both substrates. The sealing material **37** is formed to have a frame shape so as to surround the display region of the liquid crystal display device.

[0015] In the TFT array substrate **10**, a gate line (not shown) and a source line (not shown) are formed over a substrate with an insulating film (not shown) interposed therebetween. Then, an organic film **18** is provided in the upper layer of the gate line, the source line, and the insulating film. On the organic film **18**, a pixel electrode **19** where a transmissive pixel electrode **191** and a reflective pixel electrode **192** are stacked is formed in each pixel. A region where the pixel electrodes **19** are arranged in matrix is a display region **41**. The film thickness of the organic film **18** covered with the transparent conductive layer is different from the film thickness of the organic film **18** which is not covered with the transparent conductive layer. Thus, in a part which is not covered with the transparent conductive layer, which means in a region between pixels and a frame region **42**, the film thickness of the organic film **18** is thinner than that in the pixel region.

[0016] In the opposing substrate **30**, a BM **32**, a color material **33**, and an opposing electrode **34** and so on are formed over a substrate. Then, a columnar spacer **35** to determine the gap with the opposing TFT array substrate **10** is provided on the opposing electrode **34**. The columnar spacer **35** is formed in the display region **41** and the frame region **42**. More specifically, in the display region **41**, the columnar spacer **35** is arranged in a position opposed to the reflective pixel electrode **192**. On the other hand, in the frame region **42**, the columnar spacer is arranged in a region from outside the display region **41** to inside the sealing material **37**. However, the organic film **18** in this part has a smaller film thickness than that of the pixel region as described above. Accordingly, as shown in FIG. **17**, it is impossible to keep the gap between the both substrates even, which causes a gap failure. Due to this gap failure, the display failure such as the display unevenness occurs at the periphery of the display region **41** (peripheral gap unevenness), which degrades the display quality of the liquid crystal display device.

[0017] In recent years, the glass substrate that is used for both the TFT array substrate **10** and the opposing substrate **30** has been thinner and thinner in order to realize the reduction in thickness and weight required in the liquid crystal panel, which decreases the mechanical strength. Furthermore, a plastic substrate may be alternatively used, although it has not been common yet. Under such circumstances, the substrate is deformed by the pressure from inside and outside of the cell which is applied in bonding the TFT array substrate **10** together with the opposing substrate **30** for making a panel, which makes it more and more difficult to keep the gap between the both substrates even.

[0018] The present invention has been made in order to solve the above-described problems, and aims to provide a liquid crystal display device with excellent display quality.

SUMMARY OF THE INVENTION

[0019] According to a first aspect of the present invention, there is provided a liquid crystal display device having a pixel electrode including a transmissive pixel electrode and a reflective pixel electrode that is formed in a part of the transmissive pixel electrode, the liquid crystal display device comprising an array substrate including the pixel electrode formed thereon, an opposing substrate arranged to be opposed to the array substrate, a sealing material formed in a frame shape to surround a display region, the sealing material bonding the array substrate with the opposing substrate, an organic film formed on the array substrate, the organic film having a thick film portion provided below the pixel electrode and a thin film portion that is provided outside the thick film portion, a columnar spacer formed on the opposing substrate and holding substrate gap between the array substrate and the opposing substrate, and a gap retaining pad formed in a region outside the display region and inside the sealing material, the gap retaining pad adjusting the substrate gap outside the display region according to the substrate gap on the pixel electrode, in which the columnar spacer holds the substrate gap between the array substrate and the opposing substrate over the gap retaining pad and over the pixel electrode.

[0020] According to a second aspect of the present invention, there is provided a liquid crystal display device having a pixel electrode including a transmissive pixel electrode and a reflective pixel electrode that is formed in a part of the transmissive pixel electrode, the liquid crystal display device including an array substrate including the pixel electrode formed thereon, an opposing substrate arranged to be opposed to the array substrate, a sealing material formed in a frame shape to surround a display region, the sealing material bonding the array substrate with the opposing substrate, an organic film formed on the array substrate, the organic film having a concave and convex pattern below the reflective pixel electrode, an inorganic insulating film formed on the organic film, and a columnar spacer formed on the opposing substrate and holding substrate gap between the array substrate and the opposing substrate in a region outside the display region and inside the sealing material and in the region over the pixel electrode.

[0021] According to a third aspect of the present invention, there is provided a liquid crystal display device having a pixel electrode including a transmissive pixel electrode and a reflective pixel electrode that is formed in a part of the transmissive pixel electrode, the liquid crystal display device including an array substrate including the pixel electrode formed thereon, an opposing substrate arranged to be opposed to the array substrate, a sealing material formed in a frame shape to surround a display region, the sealing material bonding the array substrate with the opposing substrate, an organic film formed on the array substrate, the organic film having a thick film portion provided below the pixel electrode and a thin film portion that is provided outside the thick film portion, a columnar spacer formed on the opposing substrate and holding substrate gap between the array substrate and the opposing substrate, in which the columnar spacer includes a first columnar spacer formed in a position opposed to the pixel electrode and a second columnar spacer formed in a region outside the display region and inside the sealing material, and the second columnar spacer is formed to be higher than the first columnar spacer according to a difference between the substrate gap outside the display region and the substrate gap over the pixel electrode.

[0022] According to the present invention, it is possible to provide a liquid crystal display device with excellent display quality.

[0023] The above and other objects, features and advantages of the present invention will become more fully understood from the detailed description given hereinbelow and the accompanying drawings which are given by way of illustration only, and thus are not to be considered as limiting the present invention.

BRIEF DESCRIPTION OF THE DRAWINGS

[0024] FIG. **1** is a front view showing the structure of a liquid crystal display device according to a first embodiment;

[0025] FIG. **2** is a plane view showing the pixel structure of a TFT array substrate according to the first embodiment;

[0026] FIG. **3** is a cross sectional view taken along the line of FIG. **2**;

[0027] FIG. **4** is an enlarged plane view showing the structure at the periphery of a display region and outside thereof of the liquid crystal display panel according to the first embodiment;

[0028] FIG. **5** is a cross sectional view taken along the line V-V of FIG. **4**;

[0029] FIGS. **6**A to **6**H are cross sectional views showing the manufacturing process of the TFT array substrate according to the first embodiment;

[0030] FIG. **7** is an enlarged plane view showing the structure at the periphery of the display region and outside thereof of a liquid crystal display panel according to another exemplary example of the first embodiment;

[0031] FIG. **8** is a cross sectional view schematically showing the structure at the periphery of the display region and outside thereof of the liquid crystal display panel according to another exemplary example of the first embodiment;

[0032] FIG. **9** is a cross sectional view schematically showing the structure at the periphery of a display region and outside thereof of a liquid crystal display panel according to a second embodiment;

[0033] FIGS. **10**A to **10**H are cross sectional views showing the manufacturing process of a TFT array substrate according to the second embodiment;

[0034] FIG. **11** is a cross sectional view schematically showing the structure at the periphery of a display region and outside thereof of a liquid crystal display panel according to a third embodiment;

[0035] FIG. **12** is a cross sectional view schematically showing the structure at the periphery of the display region and outside thereof of a liquid crystal display panel according to another exemplary example of the third embodiment;

[0036] FIG. **13** is a cross sectional view schematically showing the structure at the periphery of a display region and outside thereof of a liquid crystal display panel according to a fourth embodiment;

[0037] FIG. **14** is a cross sectional view schematically showing the structure at the periphery of the display region and outside thereof of a liquid crystal display panel according to another exemplary example of the fourth embodiment;

[0038] FIG. **15** is a cross sectional view schematically showing the structure at the periphery of a display region and outside thereof of a liquid crystal display panel according to a fifth embodiment;

[0039] FIG. **16** is a cross sectional view schematically showing the structure at the periphery of a display region and outside thereof of a liquid crystal display panel according to a sixth embodiment; and

[0040] FIG. **17** is a cross sectional view schematically showing the structure at the periphery of a display region and outside thereof of a liquid crystal display panel according to a related art.

DESCRIPTION OF THE EXEMPLARY EMBODIMENTS

[0041] The preferred embodiments of the present invention will now be described in detail. The following description will be made of the embodiments of the present invention, and the present invention is not limited to the following embodiments. Some parts of the following description and the drawings are omitted and simplified as appropriate for the sake of clarity. Further, the overlapping description is omitted as needed for the sake of simplicity. Note that the same components in the drawings are denoted by identical reference numerals, and the description is omitted as appropriate.

First Embodiment

[0042] Referring first to FIG. **1**, a liquid crystal display device according to the first embodiment will be described. FIG. **1** is a front view showing the structure of the liquid crystal display device according to the first embodiment. The liquid crystal display device according to the first embodiment is a transflective liquid crystal display device including a transmissive region and a reflective region in one pixel. The overall structure of the liquid crystal display device is common throughout the first to sixth embodiments described below.

[0043] The liquid crystal display device according to the present invention includes a liquid crystal display panel **1**. In the liquid crystal display panel **1**, a thin film transistor (TFT) array substrate **10** and an opposing substrate **30** are arranged opposite to each other.

[0044] The TFT array substrate **10** has a display region **41** and a frame region **42** surrounding the display region **41**. In the display region **41**, a plurality of gate lines (scanning signal lines) **12** and a plurality of source lines (display signal lines) **16** are formed. The plurality of gate lines **12** are arranged in parallel. Likewise, the plurality of source lines **16** are arranged in parallel. The gate lines **12** and the source lines **16** cross each other. The gate lines **12** and the source lines **16** are orthogonal to each other. A region surrounded by the adjacent gate lines **12** and the source lines **16** is a pixel **49**. Thus, the pixels **49** are arranged in matrix in the TFT array substrate **10**.

[0045] Further, a flexible substrate **47** to which a control circuit **45** is mounted and a flexible substrate **48** to which a control circuit **46** is mounted are connected to the frame region **42** of the TFT array substrate **10**. The gate line **12** extends from the display region **41** to the frame region **42**. Then, the gate line **12** is connected with the control circuit **46** through a gate line terminal (gate terminal) **44** at the end of the TFT array substrate **10**. Likewise, the source line **16** extends from the display region **41** to the frame region **42**. Then, the source line **16** is connected with the control circuit **45** through a source line terminal (source terminal) **43** at the end of the TFT array substrate **10**.

[0046] Various signals are externally supplied to the control circuits **45** and **46**. The control circuit **46** supplies a gate signal (scanning signal) to the gate line **12** based on the external control signal. The gate lines **12** are successively selected in accordance with the gate signal. The control circuit **45** supplies a display signal to the source line **16** based on the

external control signal or display data. As a result, the display voltage corresponding to the display data can be supplied to each pixel **49**. Incidentally, the control circuit **45** may be separately mounted on the liquid crystal display panel **1**, the flexible substrate **47**, and an FPC (Flexible Printed Circuit) (not shown). Likewise, the control circuit **46** may be separately mounted on the liquid crystal display panel **1**, the flexible substrate **48**, and the FPC. Further, a part of the control circuits **45**, **46** may be formed on the TFT array substrate **10**.

[0047] In each pixel **49**, at least one TFT **50** is formed. The TFT **50** is arranged in the vicinity of an intersection of the source line **16** with the gate line **12**. For example, this TFT **50** supplies the display voltage to a pixel electrode. The TFT **50** which is a switching element is turned on in accordance with the gate signal from the gate line **12**. As such, the display voltage is applied from the source line **16** to the pixel electrode connected to a drain electrode of the TFT **50**. Then, an electric field corresponding to the display voltage is generated between the pixel electrode and an opposing electrode. Note that an orientation film (not shown) is formed on the surface of the TFT array substrate **10**. The detailed structure in the pixel **49** will be described later.

[0048] On the other hand, the opposing substrate **30** is a color filter substrate, for example, and is placed on the display screen side. On the opposing substrate **30**, a color filter (color material), a black matrix (BM), the opposing electrode, the orientation film and the like are formed. The detailed structure of the opposing substrate **30** will be described later. Note that the opposing electrode may be placed in the TFT array substrate **10** side. The TFT array substrate **10** and the opposing substrate **30** are attached together through a sealing material **37**. The sealing material **37** is provided to have a frame shape so as to surround the display region **41**. Then, a liquid crystal layer **36** is interposed between the TFT array substrate **10** and the opposing substrate **30**. That is, liquid crystal is filled in between the TFT array substrate **10** and the opposing substrate **30**. Further, a polarizing plate, a retardation plate and the like are placed on the outer surfaces of the TFT array substrate **10** and the opposing substrate **30**. Further, a backlight unit or the like is arranged on the opposite side to the display screen of the liquid crystal display panel **1**.

[0049] Liquid crystal is driven by an electric field generated between the pixel electrode and the opposing electrode. That is, an orientation direction of the liquid crystal between the substrates is changed. As a result, a polarization state of light transmitted through the liquid crystal layer is changed. That is, a polarization state of the light that has turned into linearly-polarized light through the polarizing plate is changed by the liquid crystal layer **36**. More specifically, in the transmissive region, light from a backlight unit is turned into linearly-polarized light by the polarizing plate arranged in the TFT array substrate side. Then, a polarization state is changed by the linearly-polarized light passing through the retardation plate in the opposing substrate **30**, the liquid crystal layer **36**, and the retardation plate in the TFT array substrate **10** side. On the other hand, in the reflective region, light from the display screen side of the liquid crystal display panel is turned into linearly-polarized light by the polarizing plate arranged in the opposing substrate **30** side. Then, a polarization state is changed by the linearly-polarized light reciprocating in the retardation plate in the opposing substrate **30** side and the liquid crystal layer **36**.

[0050] An amount of light transmitted through the polarizing plate on the opposing substrate **30** side is changed in accordance with the polarization state. That is, an amount of light transmitted through the polarizing plate on the display screen side out of the transmitted light that is emitted from the backlight unit and transmitted through the liquid crystal display panel **1** and the reflected light that is reflected in the liquid crystal display panel **1** is changed. The orientation direction of liquid crystal is changed in accordance with the applied display voltage. Hence, the display voltage is controlled to thereby change an amount of light transmitted through the polarizing plate on the display screen side. That is, different display voltages are applied to the pixels to thereby display a desired image.

[0051] Next, the pixel structure of the TFT array substrate **10** will be described in detail with reference to FIGS. **2** and **3**. FIG. **2** is a plane view showing the pixel structure of the TFT array substrate **10** according to the first embodiment. FIG. **3** is a cross sectional view taken along the line of FIG. **2**. FIG. **2** is a plane view showing one of the pixels **49** on the TFT array substrate **10**. On the TFT array substrate **10**, the plurality of pixels **49** are arranged in matrix. Note that, in the first embodiment, description is made of a case in which a channel-etch type TFT **50** is formed as an example.

[0052] In FIGS. **2** and **3**, in the TFT array substrate **10**, the gate line **12**, a part of which forming a gate electrode **121**, is formed on a transparent insulating substrate **11** such as a glass or a plastic. Accordingly, the gate line **12** is electrically connected to the gate electrode **121** of the TFT **50**.

[0053] On the substrate **11**, an auxiliary capacitance electrode **122** is formed by the same layer as the gate line **12**. The auxiliary capacitance electrode **122** is arranged apart from the gate line **12**, and extends in parallel with the gate line **12**. In other words, the auxiliary capacitance electrode **122** is arranged between the adjacent gate lines **12**. In this example, the auxiliary capacitance electrode **122** is arranged in the reflective region of the pixel **49**. The auxiliary capacitance electrode **122** forms a retention capacity to enable the stable display with a pixel electrode **19** described below. The retention capacity retains the driving voltage from the TFT **50** even after the TFT **50** connected to each pixel **49** is turned off.

[0054] The gate line **12**, the gate electrode **121**, and the auxiliary capacitance electrode **122** are formed of Mo having a film thickness of 250 nm, for example.

[0055] A gate insulating film **13** is formed so as to cover the gate line **12**, the gate electrode **121**, and the auxiliary capacitance electrode **122**. The gate insulating film **13** is formed of SiN having a film thickness of 400 nm, for example. A semiconductor layer **14** is arranged on the opposite surface of the gate electrode **121** with the gate insulating film **13** interposed therebetween. The semiconductor layer **14** is formed of an amorphous silicon (a-Si (i)) or the like having a film thickness of 130 nm, for example.

[0056] Further, an ohmic contact film **15** into which conductive impurities are doped is formed on each end of the semiconductor layer **14**. The regions of the semiconductor layer **14** corresponding to the ohmic contact films **15** are source/drain regions. More specifically, the region of the semiconductor layer **14** corresponding to the ohmic contact film **15** in the left side of FIG. **3** is a source region. Then, the region of the semiconductor layer **14** corresponding to the ohmic contact film **15** in the right side of FIG. **3** is a drain region. As such, the source/drain regions are formed in both ends of the semiconductor layer **14**. Then, the part of the

semiconductor layer **14** between the source and the drain regions is a channel region. The ohmic contact film **15** is not formed on the channel region of the semiconductor layer **14**. The ohmic contact film **15** is formed of an n type amorphous silicon (a-Si (n)), where impurities such as phosphorus (P) or the like are heavily doped, for example, to have a film thickness of 50 nm.

[0057] On the ohmic contact films **15**, a source electrode **161** and a drain electrode **162** are formed. More specifically, the source electrode **161** is formed on the ohmic contact film **15** in the source region side. Then, the drain electrode **162** is formed on the ohmic contact film **15** in the drain region side. The channel-etch type TFT **50** is thus formed. Then, the source electrode **161** and the drain electrode **162** are formed so as to extend toward the outside of the channel region of the semiconductor layer **14**. In summary, the source electrode **161** and the drain electrode **162** are not formed on the channel region of the semiconductor layer **14** as is similar to the ohmic contact film **15**.

[0058] The source electrode **161** extends toward the outside of the channel region of the semiconductor layer **14** and is connected to the source line **16**. Thus, the source line **16** is electrically connected to the source electrode **161** of the TFT **50**. The source line **16** is formed on the gate insulating film **13**, and is arranged to linearly extend in a direction in which it crosses the gate line **12** on the substrate **11**. As such, the source line **16** is divided at the intersection with the gate line **12** and extends along the gate line **12**, and is connected to the source electrode **161**. Note that, although not shown in FIG. **2**, a stacked film formed of a pattern which is in the same layer as the semiconductor layer **14** and a pattern which is in the same layer as the ohmic contact film **15** may be provided at the intersection of the gate line **12** with the source line **16**, as shown in FIG. **3**. As such, the insulation resistance between the gate line **12** and the source line **16** can be improved.

[0059] On the other hand, the drain electrode **162** extends toward the outside of the channel region of the semiconductor layer **14**, and includes an extending portion that extends toward the outside of the TFT **50**. The source electrode **161**, the drain electrode **162**, and the source line **16** are formed of Mo having a film thickness of 300 nm, for example.

[0060] An interlayer insulating film **17** is provided so as to cover the source electrode **161**, the drain electrode **162**, and the source line **16**. As such, the interlayer insulating film **17** covers the TFT **50**. The interlayer insulating film **17** is formed of SiN having a film thickness of 100 nm. Further, an organic film **18** is stacked on the interlayer insulating film **17**. On the drain electrode **162** of the TFT **50**, a contact hole **181** is provided in the organic film **18** and the interlayer insulating film **17**. The contact hole **181** penetrates the organic film **18** and the interlayer insulating film **17**, so as to reach the drain electrode **162** of the TFT **50**.

[0061] The organic film **18** is an organic resin film that functions as a base layer to form the pixel electrode **19**, and planarizes irregularities on the substrate **11** produced by the TFT **50**, the auxiliary capacitance electrode **122**, the gate line **12**, and the source line **16**. The liquid crystal display device according to the first embodiment is a transflective one, and the pixel **49** includes a transmissive region and a reflective region. In the reflective region, a concave and convex pattern **185** is formed on the surface of the organic film **18** in order to make a reflected light have a proper scattering distribution. Note that the film thickness of the organic film **18** in the region that is not covered with the pixel electrode **19** described later is thinner than that in the region covered with the pixel electrode **19**. In this example, the film thickness of the organic film **18** of the region covered with the pixel electrode **19** is, for example, about 3600 nm.

[0062] On the organic film **18**, the pixel electrode **19** connected to the drain electrode **162** through the contact hole **181** is provided. The pixel electrode **19** has a single-layer structure of a transmissive pixel electrode **191** in the transmissive region, and has a stacked structure in which a reflective pixel electrode **192** is stacked on the transmissive pixel electrode **191** in the reflective region. In short, the transmissive pixel electrode **191** is provided in both of the transmissive region and the reflective region. The transmissive pixel electrode **191** is, in this example, formed to have a film thickness of 80 nm by the transparent conductive layer such as ITO, IZO, ITZO, ITSO or the like, for example. On the other hand, the reflective pixel electrode **192** is provided only in the reflective region. The reflective pixel electrode **192** is formed of, in this example, a reflective metal layer in which an AlCu film having a film thickness of 300 nm is stacked on an Mo film having a film thickness of 50 nm. Further, in order to adjust the work function with the liquid crystal layer **36** between the transmissive region and the reflective region, the pixel electrode **19** may have an upper transparent conductive layer **193** laminated on the reflective pixel electrode **192** as shown in FIG. **3**. In this case, the upper transparent conductive layer **193** is formed of, for example, a transparent conductive layer of ITO, IZO, ITZO, ITSO or the like having a film thickness of 5 nm.

[0063] Now, the structure at the periphery of the display region **41** and outside thereof of the liquid crystal display panel **1** will be described with reference to FIGS. **4** and **5**. FIG. **4** is an enlarged plane view showing the structure at the periphery of the display region **41** and outside thereof of the liquid crystal display panel **1** according to the first embodiment. FIG. **5** is a cross sectional view taken along the line V-V of FIG. **4**, and schematically shows the structure at the periphery of the display region **41** and outside thereof of the liquid crystal display panel **1** according to the first embodiment. Note that, in FIG. **4**, only the structure of the TFT array substrate **10** side is shown for the sake of convenience, and the structure of the opposing substrate **30** side is omitted. Further, FIG. **5** schematically shows the structure of the TFT array substrate **10**, and the components such as the gate line **12**, the source line **16**, and the TFT **50** or the like are omitted as appropriate.

[0064] In FIGS. **4** and **5**, as described in detail in FIGS. **2** and **3**, the organic film **18** is provided in the upper layer of the gate line **12**, the source line **16**, and the TFT **50** over the substrate **11** of the TFT array substrate **10**. This organic film **18** is formed substantially on the whole surface of the substrate **11** from the display region **41** to the frame region **42**. On the organic film **18**, the pixel electrode **19** formed of the lamination of the transmissive pixel electrode **191** and the reflective pixel electrode **192** is formed in each pixel **49**. Then, as shown in FIG. **5**, in a region where the pixel electrode **19** is provided (pixel region), the film thickness of the organic film **18** is larger than that in a region between the adjacent pixel electrodes **19** (region between pixels), as is similar to the related example shown in FIG. **17**. In summary, in the display region **41**, the thick film portion of the organic film **18** is formed in the pixel region, and the thin film portion of the organic film **18** is formed in the region between pixels.

[0065] Further, in the organic film **18**, the thin film portion that is similar as in the region between pixels is formed in the frame region **42** outside the display region **41**. In the first embodiment, the thick film portion of the organic film **18** which is similar as in the pixel region is provided in the region from outside the display region **41** to inside the sealing material **37** in the frame region **42**. Then, a transparent conductive layer **191***d* which is in the same layer as the transmissive pixel electrode **191** is formed on the thick film portion of the organic film **18**. As described above, according to the first embodiment, a gap retaining pad **20** where the transparent conductive layer **191***d* is stacked on the thick film portion of the organic film **18** is provided in a region outside the display region **41** and inside the sealing material **37**.

[0066] The gap retaining pads **20** are, as shown in FIG. **4**, for example, formed to have a strip shape along each side of the sealing material **37** having the frame shape.

[0067] The opposing substrate **30** is attached to the TFT array substrate **10** through the sealing material **37**. As shown in FIG. **5**, the opposing substrate **30** includes a black matrix **32** that is formed of a metal such as chrome, pigment or the like to shield the light on the surface of the substrate **31** that is opposed to the TFT array substrate **10**. The black matrix **32** is provided in a region that is opposed to the source line **16** and the gate line **12**, and is formed to have a lattice shape. Further, the black matrix **32** is formed to have a frame shape so as to surround the display region **41**. Then, a color material **33** formed of the pigment or the dye is formed to fill up the space in the black matrix **32**. The color materials **33** are, for example, a color filter of R (red), G (green), and B (blue), for example.

[0068] Further, an opposing electrode **34** is formed to cover the black matrix **32** and the color material **33**. The electric filed is generated between the opposing electrode **34** and the pixel electrode **19** of the TFT array substrate **10**, and the opposing electrode **34** drives the liquid crystal of the liquid crystal layer **36**. Note that a protection film formed of SiN or the like may be provided between the color material **33** and the opposing electrode **34**. The protection film is formed on the whole surface of the substrate **31** of the opposing substrate **30**, as is similar to the opposing electrode **34**. On the opposing electrode **34**, columnar spacers **35** are provided. The columnar spacers **35** are provided in the display region **41** and the frame region **42** in a space surrounded by the TFT array substrate **10**, the opposing substrate **30**, and the sealing material **37**, and hold the gap between the both substrates. The columnar spacer **35** provided in the display region **41** is provided in a part that is opposed to the reflective pixel electrode **192**. The columnar spacer **35** provided in the frame region **42** is provided in a part that is opposed to the gap retaining pad **20**. The columnar spacer **35** is formed of a material such as a resin or the like, and has a columnar shape. The columnar spacer **35** in the display region **41** is formed to have the same height as that in the frame region **42**.

[0069] In the liquid crystal display panel **1** according to the first embodiment formed as above, the distance between the surface of the TFT array substrate **10** and the surface of the opposing substrate **30** that are opposed to each other in the gap retaining pad **20** is substantially equal to that in the pixel region. Accordingly, by providing the columnar spacer **35** in a position that is opposed to the gap retaining pad **20**, the gap between the both substrates can be kept equal as that in the display region **41**, and the gap between the both substrates can be kept even across the whole part of the liquid crystal display panel **1**. As such, the gap retaining pad **20** has a function of adjusting the substrate gap outside the display region according to the substrate gap on the pixel electrode **19** in the liquid crystal display panel **1**.

[0070] Next, a manufacturing method of the liquid crystal display device according to the first embodiment will be described with reference to FIGS. **6**A to **6**H. FIGS. **6**A to **6**H are cross sectional views showing the manufacturing process of the TFT array substrate **10** according to the first embodiment. In each of FIGS. **6**A to **6**H, the right side shows a cross sectional view in the pixel **49** corresponding to the cross section of Further, in each of FIGS. **6**A to **6**H, the left side shows a cross sectional view of the gate terminal **44** portion, the source terminal **43** portion, and the gap retaining pad **20** portion.

[0071] First, an electrode film to serve as the gate electrode **121** or the like is formed on the substrate **11** formed of the transparent insulating substrate such as the glass. For example, Mo having a film thickness of 250 nm is formed on the whole surface of the substrate **11** using a sputtering device or the like. Next, a resist pattern is formed on the electrode film by a photolithography process. Then, the electrode film that is exposed from the resist pattern is removed by a wet etching process or the like to pattern the electrode film. Then, a resist removing process is performed to remove the resist pattern, to thereby forming the gate line **12**, the gate electrode **121**, the auxiliary capacitance electrode **122**, and the gate terminal **44** as shown in FIG. **6**A.

[0072] The gate insulating film **13** is formed so as to cover the gate line **12**, the gate electrode **121**, the auxiliary capacitance electrode **122**, and the gate terminal **44**. For example, SiN having a film thickness of 400 nm is formed on the whole surface of the substrate **11** as the gate insulating film **13** using a CVD device. Subsequently, the semiconductor layer **14** and the ohmic contact film **15** are formed in this order on the gate insulating film **13**. For example, a-Si (i) having a film thickness of 130 nm is formed on the whole surface of the substrate **11** as the semiconductor layer **14** using a CVD device. Then, a-Si (n) having a film thickness of 50 nm to which impurities such as phosphorus (P) or the like is added is formed on the whole surface of the substrate **11** as the ohmic contact film **15**.

[0073] After that, the resist pattern is formed on the ohmic contact film **15** by the photolithography process. Then, the ohmic contact film **15** and the semiconductor layer **14** are patterned to have an island shape by dry etching or the like. When the resist pattern is removed, the semiconductor layer **14** and the ohmic contact film **15** are formed in the opposite surface of the gate electrode **121** with the gate insulating film **13** interposed therebetween, as shown in FIG. **6**B. Note that, as shown in FIG. **6**B, a stacked pattern of the semiconductor layer **14** and the ohmic contact film **15** may be formed on the region of the gate line **12** to be the intersection with the source line **16**.

[0074] Next, the electrode film to serve as the source electrode **161**, the drain electrode **162** or the like is formed to cover the semiconductor layer **14** and the ohmic contact film **15**. For example, Mo having a film thickness of 300 nm is formed on the whole surface of the substrate **11** using the sputtering device or the like. Next, the resist pattern is formed on the electrode film by the photolithography process. Then, the electrode film is patterned by wet etching or the like. As such, the source line **16**, the source electrode **161**, the drain electrode **162**, and the source terminal **43** are formed. Subsequently, the ohmic contact film **15** that is exposed on the

surface without being covered with the source electrode **161** or the drain electrode **162** is removed by the dry etching or the like. Thus, the semiconductor layer **14** between the source electrode **161** and the drain electrode **162** is exposed to form the channel region. After that, the resist removing process is performed to remove the resist pattern, whereby the structure shown in FIG. **6**C can be obtained.

[0075] Next, the interlayer insulating film **17** is formed to cover the source line **16**, the source electrode **161**, the drain electrode **162**, and the source terminal **43**. For example, SiN having a film thickness of 100 nm is formed on the whole surface of the substrate **11** as the interlayer insulating film **17** using the CVD device. Subsequently, the organic film **18** having photosensitivity is applied on the interlayer insulating film **17** so that a film thickness of the flat part of the organic film **18** is about 3600 nm. After that, the photolithography process is performed to pattern the organic film **18**. Thus, the organic film **18** on the drain electrode **162**, the gate terminal **44**, and the source terminal **43** is removed to form openings, and the concave and convex pattern **185** is formed in the organic film **18** of the reflective region.

[0076] Then, the interlayer insulating film **17** and the gate insulating film **13** are patterned by the dry etching or the like using the organic film **18** as a mask. As such, as shown in FIG. **6**D, the interlayer insulating film **17** over the drain electrode **162** is removed to form the contact hole **181** that reaches the drain electrode **162**. Further, the interlayer insulating film **17** over the source terminal **43** is removed to form the contact hole **182** that reaches the source terminal **43**. Further, the gate insulating film **13** and the interlayer insulating film **17** over the gate terminal **44** are removed to form the contact hole **183** that reaches the gate terminal **44**.

[0077] Next, the transparent conductive layer **191***d* to serve as the transmissive pixel electrode **191** and the reflective metal layer **192***d* to serve as the reflective pixel electrode **192** are successively formed on the organic film **18**. For example, ITO having a film thickness of 80 nm is formed over the whole surface of the substrate **11** as the transparent conductive layer **191***d* using the sputtering device. IZO, ITZO, ITSO or the like may also be used instead of ITO in the transparent conductive layer **191***d*. Then, Mo having a film thickness of 50 nm, and AlCu having a film thickness of 300 nm are formed over the whole surface of the substrate **11** in this order as the reflective metal layer. In this example, ITO having a film thickness of 5 nm is successively formed over the whole surface of the substrate **11** as the upper transparent conductive layer **193**. Note that IZO, ITZO, ITSO or the like may also be used instead of ITO as the upper transparent conductive layer **193**. As such, as shown in FIG. **6**E, the contact holes **181**, **182**, **183** are covered with the transparent conductive layer **191***d*, the reflective metal layer **192***d*, and the upper transparent conductive layer **193**.

[0078] Subsequently, after applying the resist on the upper transparent conductive layer **193** by a spin coating or the like, the resist pattern **25** having a difference in film thickness is formed by the photolithography process using a multiple tone exposure such as a halftone. In the pixel region, the resist pattern **25** is formed so that the film thickness of the transmissive pixel electrode portion is thinner than the film thickness of the reflective pixel electrode portion. In summary, the resist pattern **25** includes a thick film portion **25***a* in the reflective pixel electrode portion of the pixel **49** and a thin film portion **25***b* in the transmissive pixel electrode portion of the pixel **49**. At this time, in the first embodiment, the resist pattern **25** is formed including the thick film portion **25***a* formed in the gate terminal portion and the source terminal portion and the thin film portion **25***b* formed in the gap retaining pad portion.

[0079] Then, the upper transparent conductive layer **193**, the reflective metal layer **192***d*, and the transparent conductive layer **191***d* are patterned successively or at one time by the wet etching using the resist pattern **25** as a mask. As such, the upper transparent conductive layer **193**, the reflective metal layer **192***d*, and the transparent conductive layer **191***d* are removed in the region that is not covered with the resist pattern **25** to expose the organic film **18**, as shown in FIG. **6**F.

[0080] Next, the thin film portion **25***b* of the resist pattern **25** is removed by ashing. The thickness of the thick film portion **25***a* of the resist pattern **25** is decreased, and the thick film portion **25***a* remains as a resist pattern **25***c*. In short, as shown in FIG. **6**G, the resist pattern **25** where the thin film portion **25***b* is removed becomes the resist pattern **25***c*. As such, the resist pattern **25** on the gap retaining pattern portion is removed. Further, the organic film **18** of the portion exposed from the upper transparent conductive layer **193**, the reflective metal layer **192***d*, and the transparent conductive layer **191***d* becomes thinner due to the ashing, and the thin film portion is formed in the organic film **18**. At this time, in the first embodiment, as the organic film **18** of the gap retaining pad portion is covered with the upper transparent conductive layer **193**, the reflective metal layer **192***d*, and the transparent conductive layer **191***d*, the thickness of the organic film **18** is not decreased. As such, the organic film **18** having the thick film portion that is similar to that in the pixel region is formed in the gap retaining pad portion.

[0081] After the ashing is performed, the wet etching is performed using the resist pattern **25***c* as a mask, so as to selectively pattern the upper transparent conductive layer **193** and the reflective metal layer **192***d*. As such, the upper transparent conductive layer **193** and the reflective metal layer **192***d* in the transmissive pixel electrode portion and the gap retaining pad portion are removed, and the transparent conductive layer **191***d* is exposed. After that, the resist pattern **25***c* is removed using a resist removing solution. As such, as shown in FIG. **6**H, the pixel electrode **19** having the reflective pixel electrode **192** and the upper transparent conductive layer **193** stacked in a part of the transmissive pixel electrode **191** is formed. Further, the source terminal pad and the gate terminal pad that are connected to the source terminal **43** and the gate terminal **44** through the contact holes **182** and **183** respectively are formed of a stacked film of the transparent conductive layer **191***d*, the reflective metal layer **192***d*, and the upper transparent conductive layer **193**. Further, the gap retaining pad **20** having the transparent conductive layer **191***d* stacked on the thick film portion of the organic film **18** is formed.

[0082] By patterning the upper transparent conductive layer **193** and the reflective metal layer **192***d* by the above method, the pixel electrode **19** is formed to have a step shape so that the pattern ends of the upper transparent conductive layer **193** and the reflective pixel electrode **192** are inside the pattern end of the transmissive pixel electrode **191**. In summary, the reflective pixel electrode **192** is prevented from being out of the transmissive pixel electrode **191** to have a protrusion shape (overhang shape). Accordingly, it is possible to prevent the occurrence of the failure in the later process that may be caused due to the pixel electrode **19** having the pro-

trusion shape. The TFT array substrate **10** according to the first embodiment is thus completed.

[0083] An orientation film is formed on the TFT array substrate **10** thus manufactured by a transfer method or the like. Next, the orientation film is heated and cured, followed by orientation processing (rubbing process) on the orientation film. In the orientation processing, micro scratches are formed on a contact surface with the liquid crystal layer **36**.

[0084] On the other hand, the black matrix **32** is formed on another substrate **31** by the photolithography process. The black matrix **32** may be formed of a metal such as chrome or a resin including pigment. Then, the color materials **33** are formed on the black matrix **32** by the photolithography process so as to fill the space between the black matrix **32**. The color material **33** may be a photosensitive resin formed of the pigment or the dye. In this example, the protection film such as SiN is formed on substantially the whole surface of the substrate **31** so as to cover the black matrix **32** and the color materials **33**. On this protection film, the opposing electrode **34** is formed over substantially the whole surface of the substrate **31**. A transparent conductive film formed of ITO or the like is used as the opposing electrode **34**.

[0085] On the opposing substrate **30** where the opposing electrode **34** is thus provided, the orientation film is formed in a similar way as in the TFT array substrate **10**, followed by the rubbing process. Then, the photoresist (photosensitive resin) to serve as the columnar spacer **35** is applied on the orientation film. Then, the photoresist is patterned by the photolithography process to form the columnar spacer **35**. At this time, the columnar spacers **35** are formed in a position that is opposed to the reflective pixel electrode **192** and in a position that is opposed to the gap retaining pad **20** of the TFT array substrate **10** in the later process of bonding the substrates. The opposing substrate **30** having the columnar spacer **35** is thus formed.

[0086] Next, the sealing material **37** is applied to bond the TFT array substrate **10** with the opposing substrate **30** (substrate bonding process). At this time, the TFT array substrate **10** and the opposing substrate **30** are bonded together in a way that the columnar spacers **35** are arranged to be opposed to the reflective pixel electrode **192** and the gap retaining pad **20**. After bonding the TFT array substrate **10** with the opposing substrate **30**, liquid crystal is filled from a liquid crystal injection port by a vacuum injection method or the like (liquid crystal filling process). Then, the liquid crystal injection port is sealed (sealing process). As such, the liquid crystal display panel **1** according to the first embodiment is completed.

[0087] As stated above, according to the first embodiment, the columnar spacers **35** of the opposing substrate **30** are arranged to be opposed to the gap retaining pad **20** and the reflective pixel electrode **192** of the TFT array substrate **10** to retain the gap between the both substrates. Accordingly, even when the pressure is applied between the TFT array substrate **10** and the opposing substrate **30** in the substrate bonding process, the liquid crystal filling process, and the sealing process, the gap between the both substrates can be kept even across the whole part of the liquid crystal display panel **1**.

[0088] After that, the polarizing plate is bonded to the external part of the TFT array substrate **10** and the opposing substrate **30**. Then, the control substrate is mounted, and the backlight unit or the like is attached. The liquid crystal display device according to the first embodiment is thus completed.

[0089] As stated above, according to the first embodiment, the transparent conductive layer **191***d* which is in the same layer as the transmissive pixel electrode **191** is provided in a region outside the display region **41** and inside the sealing material **37** on the TFT array substrate **10**, so as to form the gap retaining pad **20**. Accordingly, the thick film portion of the organic film **18** is formed below the transparent conductive layer **191***d* in a similar way as a position below the reflective pixel electrode **192**. Then, the both substrates are bonded together so that the columnar spacers **35** of the opposing substrate **30** are arranged in the opposite surface of the gap retaining pad **20** and the reflective pixel electrode **192**. As such, the distance with the surface of the opposing substrate **30** on the gap retaining pad **20** is substantially equal to that on the reflective pixel electrode **192**, and the columnar spacers **35** retain the gap between the both substrates in these parts. Accordingly, the gap between the both substrates outside the display region **41** is equal to that inside the display region **41**. Accordingly, the display unevenness that is produced at the periphery of the display region **41** can be suppressed, and the liquid crystal display device having excellent display quality can be provided.

[0090] In the description above, the gap retaining pads **20** are formed to have the strip shape along each side of the sealing material **37**, and the plurality of columnar spacers **35** are arranged opposite to one gap retaining pad **20**. However, the shape of the gap retaining pad **20** is not limited to it. FIG. **7** is an enlarged plane view showing the structure at the periphery of the display region **41** and outside thereof of a liquid crystal display panel **2** according to another exemplary example of the first embodiment. Further, FIG. **8** is a cross sectional view schematically showing the structure at the periphery of the display region **41** and outside thereof of the liquid crystal display panel **2** according to another exemplary example of the first embodiment. In FIG. **7**, only the structure of the TFT array substrate **10** side is shown, and the structure of the opposing substrate **30** side is omitted. Further, in FIG. **8**, the structure of the TFT array substrate **10** is schematically shown. For example, as shown in FIGS. **7** and **8**, the gap retaining pad **20** may be formed to have a size which is able to include the columnar spacer **35**, and each of the columnar spacers **35** may be arranged opposite to one gap retaining pad **20**.

Second Embodiment

[0091] A liquid crystal display device according to the second embodiment will be described with reference to FIG. **9**. The basic structure of the liquid crystal display device according to the second embodiment is similar to that of the first embodiment, and thus, the overlapping description will be omitted. In the second embodiment, the structure of the gap retaining pad **20** is different from that of the first embodiment. FIG. **9** is a cross sectional view schematically showing the structure at the periphery of the display region **41** and outside thereof of a liquid crystal display panel **3** according to the second embodiment. In FIG. **9**, the cross section corresponding to the cross sectional view in FIG. **4** is shown.

[0092] In FIG. **9**, the components identical to those in FIG. **5** are denoted by the same reference symbols, and only the difference will be described. As shown in FIG. **9**, as is similar to the first embodiment, the gap retaining pad **20** is provided in a region outside the display region **41** and inside the sealing material **37** on the TFT array substrate **10**. In the second embodiment, the gap retaining pad **20** includes the transparent conductive layer **191***d* formed in the same layer as the transmissive pixel electrode **191** and the reflective metal layer

192*d* formed in the same layer as the reflective pixel electrode **192** which are stacked on the thick film portion of the organic film **18**. Note that, when the pixel electrode **19** includes the upper transparent conductive layer **193** for adjusting the work function on the reflective pixel electrode **192**, the gap retaining pad **20** further includes the upper transparent conductive layer **193** stacked on the reflective metal layer **192***d*.

[0093] Then, the TFT array substrate **10** and the opposing substrate **30** are bonded together through the sealing material **37** so that the columnar spacers **35** of the opposing substrate **30** are arranged to be opposed to the gap retaining pad **20** and the reflective pixel electrode **192** of the TFT array substrate **10**.

[0094] Next, the manufacturing method of the liquid crystal display device according to the second embodiment will be described with reference to FIGS. **10**A to **10**H. FIGS. **10**A to **10**H are cross sectional views showing the manufacturing process of the TFT array substrate **10** according to the second embodiment of the present invention. In each of FIGS. **10**A to **10**H, the right side shows a cross sectional view in the pixel **49** corresponding to the cross section of III-III of FIG. **2**, as is similar to FIGS. **6**A to **6**H. Further, in each of FIGS. **10**A to **10**H, the left side shows a cross sectional view of the gate terminal **44** portion, the source terminal **43** portion, and the gap retaining pad **20** portion. In the second embodiment, the forming process of the gap retaining pad **20** is different from that of the first embodiment. The other processes are identical to those of the first embodiment, and thus the description will be omitted.

[0095] As is similar to the first embodiment, the electrode film to serve as the gate electrode **121** is firstly formed on the whole surface of the substrate **11**. This electrode film is patterned by the photolithography, the etching, and the resist removal. As such, the gate line **12**, the gate electrode **121**, the auxiliary capacitance electrode **122**, and the gate terminal **44** are formed on the substrate **11**, and the structure shown in FIG. **10**A is obtained. Then, the gate insulating film **13**, the semiconductor layer **14**, and the ohmic contact film **15** are formed to cover them. After that, the semiconductor layer **14** and the ohmic contact film **15** are patterned by the photolithography process, and the structure shown in FIG. **10**B is obtained.

[0096] Next, the electrode film that covers them is formed in the same way as in the first embodiment. Then, the source line **16**, the source electrode **161**, the drain electrode **162**, and the source terminal **43** are formed by the photolithography and the etching. Subsequently, as is similar to the first embodiment, the ohmic contact film **15** between the source electrode **161** and the drain electrode **162** is removed by etching, so as to form the channel region. After that, the resist removing process is performed to obtain the structure shown in FIG. **10**C.

[0097] After forming the channel region, as is similar to the first embodiment, the interlayer insulating film **17** is formed thereon. Subsequently, the organic film **18** having the concave and convex pattern **185** and the opening is formed on the interlayer insulating film **17** by the photolithography process. Then, the etching is performed using the organic film **18** as a mask. As such, as shown in FIG. **10**D, the contact hole **181** that reaches the drain electrode **162**, the contact hole **183** that reaches the gate terminal **44**, and the contact hole **182** that reaches the source terminal **43** are formed.

[0098] Then, as is similar to the first embodiment, the transparent conductive layer **191***d* and the reflective metal layer **192***d* are successively formed on the organic film **18**. As is similar to the first embodiment, the upper transparent conductive layer **193** is further formed on the reflective metal layer **192***d* in the second embodiment as well. Thus, as shown in FIG. **10**E, the contact holes **181**, **182**, **183** are covered with the transparent conductive layer **191***d*, the reflective metal layer **192***d*, and the upper transparent conductive layer **193**.

[0099] Subsequently, after applying the resist on the upper transparent conductive layer **193** by the spin coating or the like, the resist pattern **25** having a difference in film thickness is formed by the photolithography process using the multiple tone exposure such as the halftone. In the second embodiment, as shown in FIG. **10**F, the thick film portion **25***a* of the resist pattern **25** is formed in the reflective pixel electrode portion, the gate terminal portion, the source terminal portion, and the gap retaining pad portion. Further, the thin film portion **25***b* of the resist pattern **25** is formed in the transmissive pixel electrode portion. In summary, although the thin film portion **25***b* is formed in the gap retaining pad portion in the first embodiment, the thick film portion **25***a* is formed in the gap retaining pad portion in the second embodiment.

[0100] Then, the upper transparent conductive layer **193**, the reflective metal layer **192***d*, and the transparent conductive layer **191***d* are patterned successively or at one time using the resist pattern **25** as a mask by the wet etching or the like. As such, as shown in FIG. **10**F, the upper transparent conductive layer **193**, the reflective metal layer **192***d*, and the transparent conductive layer **191***d* of the region which is not covered with the resist pattern **25** are removed to expose the organic film **18**.

[0101] Next, the thin film portion **25***b* of the resist pattern **25** is removed by the ashing. The resist pattern **25** where the thin film portion **25***b* is removed becomes, as shown in FIG. **10**G, the resist pattern **25***c*. As such, the thickness of the thick film portion **25***a* of the resist pattern on the gap retaining pattern portion is made thinner, and the thick film portion **25***a* remains as the resist pattern **25***c*. Further, the thickness of the organic film **18** of the part that is exposed from the upper transparent conductive layer **193**, the reflective metal layer **192***d*, and the transparent conductive layer **191***d* is decreased as well by the ashing, and the thin film portion is formed in the organic film **18**. At this time, in the second embodiment, the organic film **18** of the gap retaining pad portion is covered with the upper transparent conductive layer **193**, the reflective metal layer **192***d*, and the transparent conductive layer **191***d*. Thus, the thickness of the organic film **18** is not deceased. As such, the organic film **18** including the thick film portion which is similar to that in the pixel region is formed in the gap retaining pad portion.

[0102] After the ashing, the wet etching or the like is performed using the resist pattern **25***c* as a mask, and the upper transparent conductive layer **193** and the reflective metal layer **192***d* are selectively patterned. As such, the reflective metal layer **192***d* and the upper transparent conductive layer **193** of the transmissive pixel electrode portion are removed to expose the transparent conductive layer **191***d*. After that, the resist pattern **25***c* is removed using the resist removing solution. As such, as shown in FIG. **10**H, the pixel electrode **19** where the reflective pixel electrode **192** and the upper transparent conductive layer **193** are stacked on a part of the transmissive pixel electrode **191** is formed. Further, the source terminal pad and the gate terminal pad that are connected to the source terminal **43** and the gate terminal **44** through the contact holes **182** and **183** respectively are

formed of a stacked film of the transparent conductive layer **191***d*, the reflective metal layer **192***d*, and the upper transparent conductive layer **193**. Further, the gap retaining pad **20** is formed where the transparent conductive layer **191***d*, the reflective metal layer **192***d*, and the upper transparent conductive layer **193** are stacked on the thick film portion of the organic film **18**.

[0103] The TFT array substrate **10** according to the second embodiment is thus completed. The following process is similar to that of the first embodiment, and thus, the description will be omitted.

[0104] As stated above, according to the second embodiment, a conductive layer that is the same as the conductive layer that forms the pixel electrode **19** is provided on the TFT array substrate **10** in a region outside the display region **41** and inside the sealing material **37** to form the gap retaining pad **20**. Accordingly, the thick film portion of the organic film **18** is formed below the conductive layer of the gap retaining pad **20** in a similar way as below the reflective pixel electrode **192**. Then, the both substrates are bonded together so that the columnar spacers **35** of the opposing substrate **30** is arranged opposite to the gap retaining pad **20** and the reflective pixel electrode **192**. As such, the distance with the surface of the opposing substrate **30** on the gap retaining pad **20** is substantially equal to that on the reflective pixel electrode **192**, and the columnar spacers **35** retain the gap between the both substrates in these parts. Accordingly, the gap between the both substrates outside the display region **41** is equal to that inside the display region **41**. Accordingly, the display unevenness that is produced at the periphery of the display region **41** can be suppressed, and the liquid crystal display device having excellent display quality can be provided.

Third Embodiment

[0105] A liquid crystal display device according to the third embodiment will be described with reference to FIG. **11**. As the basic structure of the liquid crystal display device according to the third embodiment is similar to that of the first embodiment, the overlapping description will be omitted. In the third embodiment, the structure of the gap retaining pad **20** is different from that of the first and second embodiments. FIG. **11** is a cross sectional view schematically showing the structure at the periphery of the display region **41** and outside thereof of a liquid crystal display panel **4** according to the third embodiment.

[0106] In FIG. **11**, the components identical to those of FIG. **5** are denoted by the same reference symbols, and the difference will be described. In the third embodiment, as shown in FIG. **11**, the gap retaining pad **20** is provided in a region outside the display region **41** and inside the sealing material **37** on the opposing substrate **30**. In summary, the gap retaining pad **20** is provided in the opposing substrate **30** side instead of being provided in the TFT array substrate **10** side. Accordingly, as is similar to the related example shown in FIG. **17**, in the outside of the display region **41** of the TFT array substrate **10**, the thin film portion of the organic film **18** that is similar to the region between pixels is formed.

[0107] In the gap retaining pad **20**, a plurality of color materials **33** are stacked on the substrate **31**, and the opposing electrode **34** is formed to cover them. Although the color materials **33** of red (R), green (G), and blue (B) are stacked in the gap retaining pad **20** in this example, the number of color materials **33** that are stacked is determined as needed depending on the distance between the surface of the gap retaining pad **20** of the opposing substrate **30** and the surface of the opposing TFT array substrate **10**. In summary, the color materials **33** that are stacked on the gap retaining pad **20** is determined so that the distance between the surfaces of the TFT array substrate **10** and the opposing substrate **30** that are opposed to each other on the gap retaining pad **20** of the opposing substrate **30** is equal to that on the reflective pixel electrode **192** of the TFT array substrate **10**.

[0108] The shape of the gap retaining pad **20** is not particularly limited as is similar to the first embodiment. For example, as described in the first embodiment, the gap retaining pads **20** are formed to have the strip shape along each side of the sealing material **37**, and the plurality of columnar spacers **35** may be provided on one gap retaining pad **20**. Further, the gap retaining pad **20** may be formed to have a size which is able to include the columnar spacer **35**, and each of the columnar spacers **35** may be provided in one gap retaining pad **20**. Note that, when the protection film is provided between the color materials **33** and the opposing electrode **34** in the display region **41**, the protection film is also formed in the gap retaining pad **20** by extending it from the display region **41**.

[0109] On the opposing electrode **34** of the opposing substrate **30** where the gap retaining pad **20** is provided as stated above, the columnar spacers **35** are provided in a position that is opposed to the reflective pixel electrode **192** and in a position on the gap retaining pad **20**. Then, the TFT array substrate **10** and the opposing substrate **30** are bonded together through the sealing material **37** so that the columnar spacers **35** of the opposing substrate **30** are arranged to be opposed to the reflective pixel electrode **192** of the TFT array substrate **10** and to the region which is outside the display region **41** and inside the sealing material **37**.

[0110] Note that the gap retaining pad **20** is not limited to the above structure. FIG. **12** is a cross sectional view schematically showing the structure at the periphery of the display region **41** and outside thereof of a liquid crystal display panel **5** according to another exemplary example of the third embodiment. As shown in FIG. **12**, the black matrix **32** may be formed between the color materials **33** and the substrate **31** in the gap retaining pad **20**. In this example, in the gap retaining pad **20**, the two color materials **33** are stacked on the black matrix **32**. However, as stated above, the number of color materials **33** that are stacked is determined as appropriate according to the distance between the surface of the gap retaining pad **20** of the opposing substrate **30** and the surface of the opposing TFT array substrate **10**.

[0111] As described above, in the third embodiment, at least two layers which are selected from the color materials **33** and the black matrix **32** are stacked in the region outside the display region **41** and inside the sealing material **37** on the opposing substrate, so as to form the gap retaining pad **20**. Accordingly, the height of the opposing substrate **30** from the surface of the substrate **31** in the gap retaining pad **20** becomes higher than that in the display region **41**. In other words, the distance from the surface of the TFT array substrate **10** on the gap retaining pad **20** is substantially equal to the distance from the surface of the opposing substrate **30** on the reflective pixel electrode **192**, and the distance between the both substrates is held by the columnar spacers **35** in these parts. Accordingly, the distance between the both substrates outside the display region **41** is equal to that inside the display region **41**. Accordingly, it is possible to provide the liquid

crystal display device with high display quality and which suppresses the display unevenness that occurs at the periphery of the display region **41**.

Fourth Embodiment

[0112] A liquid crystal display device according to the fourth embodiment will be described with reference to FIG. **13**. As the basic structure of the liquid crystal display device according to the fourth embodiment is similar to that of the first embodiment, the overlapping description will be omitted. In the fourth embodiment, the structure of the TFT array substrate **10** is different from that of the first embodiment. FIG. **13** is a cross sectional view schematically showing the structure at the periphery of the display region **41** and outside thereof of a liquid crystal display panel **6** according to the fourth embodiment.

[0113] In FIG. **13**, the same components as those in FIG. **5** are denoted by identical reference symbols, and only the difference will be described. As shown in FIG. **13**, the thin film portion of the organic film **18** as is similar to the region between pixels is formed outside the display region **41** of the TFT array substrate **10**, as is similar to the related example shown in FIG. **17**. In the fourth embodiment, a planarizing film **21** is further formed on the pixel electrode **19** of the TFT array substrate **10**. The planarizing film **21** is formed to cover the pixel electrode **19** and the organic film **18**, and planarizes the irregularities that are produced on the TFT array substrate **10**. The planarizing film **21** is formed to be larger than the display region **41** and formed in the region inside the sealing material **37** having the frame shape. In other words, the planarizing film **21** is not provided below the sealing material **37**. As stated above, the planarizing film **21** functions as the gap retaining pad **20** in the region outside the display region **41** and inside the sealing material **37** as is similar to the first embodiment. The planarizing film **21** is formed of a planarizing film such as an organic insulating film or an inorganic insulating film.

[0114] The TFT array substrate **10** where the planarizing film **21** is thus provided is bonded to the opposing substrate **30** through the sealing material **37** so that the columnar spacer **35** of the opposing substrate **30** is arranged to be opposed to the reflective pixel electrode **192** and to the region outside the display region **41** and inside the sealing material **37**.

[0115] Note that the planarizing film **21** is not limited to the above shape. FIG. **14** is a cross sectional view schematically showing the structure at the periphery of the display region **41** and outside thereof of a liquid crystal display panel **7** according to another exemplary example of the fourth embodiment. As shown in FIG. **14**, the planarizing film **21** may be formed to fill up the thin film portion of the organic film **18**. However, also in this case, as described above, the planarizing film **21** is not provided below the sealing material **37**.

[0116] As described above, in the fourth embodiment, the planarizing film **21** is further formed on the pixel electrode **19** of the TFT array substrate **10**. At this time, the planarizing film **21** is formed so that the height of the surface of the planarizing film **21** provided on the thin film portion of the organic film **18** from the substrate **11** is equal to or larger than the height of the surface of the transmissive pixel electrode **191** from the substrate **11**. As such, the height of the surface from the substrate **11** on the reflective pixel electrode **192** is substantially equal to that in the region which is outside the display region **41** and inside the sealing material **37**. The columnar spacers **35** keep the distance between the TFT array substrate **10** and the opposing substrate **30** in these parts. Accordingly, the distance between the both substrates outside the display region **41** is equal to that inside the display region **41**. Accordingly, the display unevenness that occurs at the periphery of the display region **41** can be suppressed, and the liquid crystal display device having excellent display quality can be provided.

Fifth Embodiment

[0117] The liquid crystal display device according to the fifth embodiment will be described with reference to FIG. **15**. As the basic structure of the liquid crystal display device according to the fifth embodiment is similar to that of the first embodiment, the overlapping description will be omitted. In the fifth embodiment, the structure of the TFT array substrate **10** is different from that of the first embodiment. FIG. **15** is a cross sectional view schematically showing the structure at the periphery of the display region **41** and outside thereof of a liquid crystal display panel **8** according to the fifth embodiment.

[0118] In FIG. **15**, the components identical to those in FIG. **5** are denoted by the same reference symbols, and only the difference will be described. As shown in FIG. **15**, in the fifth embodiment, an inorganic insulating film **22** is further formed between the organic film **18** and the transmissive pixel electrode **191**. Accordingly, in the organic film **18** of the fifth embodiment, the thin film portion is not provided, as is different from the first to fourth embodiments. In summary, as the organic film **18** is covered with the inorganic insulating film **22**, the thickness of the organic film **18** is not decreased when the aching is performed on the resist pattern having a difference in film thickness that is formed as a mask to pattern the transmissive pixel electrode **191** and the reflective pixel electrode **192**. Accordingly, by providing the inorganic insulating film **22** on the organic film **18**, it is possible to prevent the decrease of the film thickness of the organic film **18** in ashing, and to prevent the thin film portion from being formed. The inorganic insulating film **22** may be formed of SiN having a film thickness of 100 nm over the whole surface of the substrate **11** using the CVD device, for example.

[0119] The TFT array substrate **10** where the inorganic insulating film **22** is thus provided is bonded to the opposing substrate **30** through the sealing material **37** so that the columnar spacers **35** of the opposing substrate **30** are arranged to be opposed to the reflective pixel electrode **192** and to the region outside the display region **41** and inside the sealing material **37**.

[0120] As described above, in the fifth embodiment, the inorganic insulating film **22** is further formed between the transmissive pixel electrode **191** and the organic film **18** of the TFT array substrate **10**. As such, it is possible to prevent the decrease of the film thickness of the organic film **18** and to prevent the thin film portion from being formed due to the ashing in forming the transmissive pixel electrode **191** and the reflective pixel electrode **192** by one photolithography. In other words, the height of the surface from the substrate **11** in the region outside the display region **41** and inside the sealing material **37** is substantially equal to that on the reflective pixel electrode **192**. The columnar spacers **35** keep the gap between the TFT array substrate **10** and the opposing substrate **30** in these parts. Accordingly, the gap between the both substrates outside the display region **41** is equal to that inside the display region **41**. Accordingly, it is possible to suppress the display

unevenness that occurs at the periphery of the display region **41**, and to provide the liquid crystal display device having excellent display quality.

Sixth Embodiment

[0121] The liquid crystal display device according to the sixth embodiment will be described with reference to FIG. **16**. As the basic structure of the liquid crystal display device according to the sixth embodiment is similar to that of the first embodiment, the overlapping description will be omitted. In the sixth embodiment, the structure outside the display region **41** and inside the sealing material **37** is different from that of the first embodiment. FIG. **16** is a cross sectional view schematically showing the structure at the periphery of the display region **41** and outside thereof of a liquid crystal display panel **9** according to the sixth embodiment.

[0122] In FIG. **16**, the same components as those in FIG. **5** are denoted by the same reference symbols, and only the difference will be described. As shown in FIG. **16**, the gap retaining pad **20** is not provided in the TFT array substrate **10** in a region outside the display region **41** and inside the sealing material **37**. Accordingly, the thin film portion of the organic film **18** that is similar to the region between pixels is formed outside the display region **41** of the TFT array substrate **10**, as is similar to the related art shown in FIG. **17**.

[0123] In the sixth embodiment, columnar spacers **35**, **35***a* having different heights are arranged in the opposing substrate **30**. The columnar spacer **35***a* is formed in a region outside the display region **41** and inside the sealing material **37**, and has a height larger than that of the columnar spacer **35** that is arranged to be opposed to the reflective pixel electrode **192** in the display region **41**. In other words, as the film thickness of the organic film **18** in the outside of the display region **41** is thinner than that of the pixel region, the distance from the surface of the opposing substrate **30** to the surface of the TFT array substrate **10** is larger than that in the pixel region. As such, the columnar spacers **35** and **35***a* having heights according to each distance are formed so that the both substrates **11** and **31** are arranged to be opposed to each other in parallel across all over the liquid crystal display panel **9**. In summary, the columnar spacer **35***a* is formed to be higher than the columnar spacer **35** according to the difference between the substrate gap outside the display region **41** and the substrate gap in the pixel electrode **19**. These columnar spacers **35**, **35***a* may be formed of separate photolithography processes.

[0124] The opposing substrate **30** in which the columnar spacers **35**, **35***a* are thus provided is arranged to be opposed to the TFT array substrate **10**, and the both substrates are bonded through the sealing material **37**.

[0125] As stated above, in the sixth embodiment, the columnar spacers **35** and **35***a* are formed according to each gap so that the columnar spacer **35***a* that is provided in the region outside the display region **41** and inside the sealing material **37** is higher than the columnar spacer **35** that is arranged to be opposed to the reflective pixel electrode **192** in the display region **41**. As such, the both substrates are retained so that the gap between the surface of the TFT array substrate **10** and the surface of the opposing substrate **30** in the region outside the display region **41** and inside the sealing material **37** is wider than that on the reflective pixel electrode **192**. In summary, the both substrates are retained by the columnar spacer **35***a* having larger height so as to cancel the decreased amount of the film thickness of the organic film **18** due to the ashing in forming the transmissive pixel electrode **191** and the reflective pixel electrode **192** by one photolithography. Accordingly, the TFT array substrate **10** and the opposing substrate **30** form the liquid crystal display panel **9** where the substrates are arranged to be opposed to each other in parallel inside and outside the display region **41**. Accordingly, the display unevenness that is produced at the periphery of the display region **41** can be suppressed, and the liquid crystal display device having excellent display quality can be provided.

[0126] Note that, in the first to sixth embodiments, the description has been made of the liquid crystal display device where the channel etch type TFT **50** is formed. However, another type of TFT **50** such as a top gate type may be provided. Furthermore, although the structure where the upper transparent conductive layer **193** is provided on the reflective pixel electrode **192** for the purpose of preventing sticking has been described as an example, the same effect can be achieved without the upper transparent conductive layer **193** as well. Further, the structure is not limited to the one in which the columnar spacers are provided on the opposing substrate **30**. The same effect can be achieved with the structure in which the columnar spacers are provided on the TFT array substrate **10**.

[0127] The above description has been made of the embodiments of the present invention, and the present invention is not limited to the above embodiments. Further, a person skilled in the art would be able to readily change, add, and modify each element of the above embodiments within the scope of the present invention.

[0128] From the invention thus described, it will be obvious that the embodiments of the invention may be varied in many ways. Such variations are not to be regarded as a departure from the spirit and scope of the invention, and all such modifications as would be obvious to one skilled in the art are intended for inclusion within the scope of the following claims.

What is claimed is:

1. A liquid crystal display device having pixel electrodes, each pixel electrode including a transmissive pixel electrode and a reflective pixel electrode that is formed in a part of the transmissive pixel electrode, the liquid crystal display device comprising:

an array substrate including the pixel electrodes formed thereon to provide a display region;

an opposing substrate arranged to be opposed to the array substrate;

a frame region surrounding the display region, wherein a sealing material is provided in the frame region, the sealing material bonding the array substrate with the opposing substrate;

an organic film formed on the array substrate, the organic film having a concave and a convex pattern below the reflective pixel electrode;

an inorganic insulating film formed on the organic film; and

a columnar spacer formed on the opposing substrate, the columnar spacer holding a substrate gap between the array substrate and the opposing substrate in a region outside the display region and inside the sealing material and in the region over the pixel electrodes.

2. A liquid crystal display device having pixel electrodes, each pixel electrode including a transmissive pixel electrode

and a reflective pixel electrode that is formed in a part of the transmissive pixel electrode, the liquid crystal display device comprising:

an array substrate including the pixel electrodes formed thereon to provide a display region;

an opposing substrate arranged to be opposed to the array substrate;

a frame region surrounding the display region, wherein a sealing material is provided in the frame region, the sealing material bonding the array substrate with the opposing substrate;

an organic film formed on the array substrate, the organic film having a thick film portion provided below the pixel electrodes and a thin film portion that is provided outside the thick film portion and between the pixel electrodes;

a columnar spacer formed on the opposing substrate, the columnar spacer holding a substrate gap between the array substrate and the opposing substrate, wherein

the columnar spacer includes a first columnar spacer formed in a position opposed to the pixel electrodes and a second columnar spacer formed in a region outside the display region and inside the sealing material, and

the second columnar spacer is formed to be higher than the first columnar spacer according to a difference between the substrate gap outside the display region and the substrate gap over the pixel electrode.

* * * * *

专利名称(译)	液晶显示装置		
公开(公告)号	US20120200799A1	公开(公告)日	2012-08-09
申请号	US13/450849	申请日	2012-04-19
[标]申请(专利权)人(译)	三菱电机株式会社		
申请(专利权)人(译)	三菱电机株式会社		
当前申请(专利权)人(译)	三菱电机株式会社		
[标]发明人	MIYAMOTO KENICHI HAYASHI MASAMI TANAHARA MANABU AOKI MASARU		
发明人	MIYAMOTO, KENICHI HAYASHI, MASAMI TANAHARA, MANABU AOKI, MASARU		
IPC分类号	G02F1/1339		
CPC分类号	G02F1/13394 G02F1/133555		
优先权	2008118345 2008-04-30 JP		
其他公开文献	US8471987		
外部链接	Espacenet USPTO		

摘要(译)
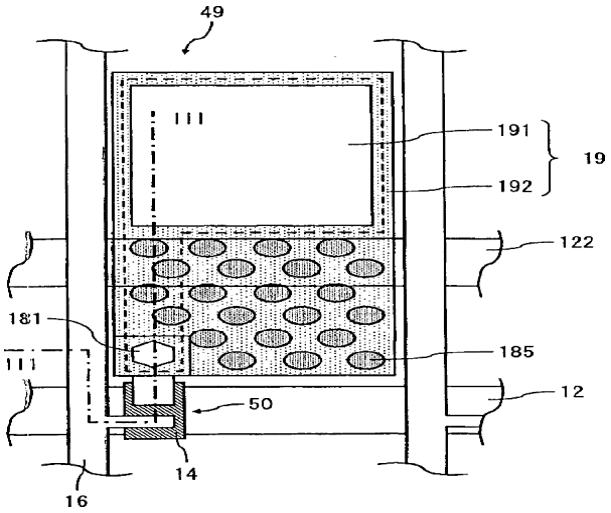
液晶显示装置具有包括透射像素电极和反射像素电极的像素电极。液晶显示装置包括：TFT阵列基板，相对基板，粘合两个基板的密封材料，形成在TFT阵列基板上的有机膜，具有设置在像素电极下方的厚膜部分和设置在外部的薄膜部分厚膜部分，形成在相对基板上的柱状间隔物和两个基板之间的保持基板间隙，以及形成在显示区域外部和密封材料内部的区域中的间隙保持垫，以根据显示区域外的基板间隙调整到像素电极上的衬底间隙。柱状间隔物在间隙保持垫上方和像素电极上方保持两个基板之间的基板间隙。