US 20140368751A1

(19) United States

(12) Patent Application Publication

HAN et al.

(10) Pub. No.: US 2014/0368751 A1

(43) Pub. Date: Dec. 18, 2014

(54) **LIQUID CRYSTAL PANEL ASSEMBLY AND LIQUID CRYSTAL DISPLAY DEVICE INCLUDING THE SAME**

(71) Applicant: **SAMSUNG ELECTRONICS CO., LTD.**, SUWON-SI (KR)

(72) Inventors: **Young-ran HAN**, Seoul (KR); **Kyoung-oh CHOI**, Seoul (KR); **Hyun-mook CHOI**, Seoul (KR)

(73) Assignee: **SAMSUNG ELECTRONICS CO., LTD.**, SUWON-SI (KR)

(21) Appl. No.: **14/168,226**

(22) Filed: **Jan. 30, 2014**

(30) **Foreign Application Priority Data**

Jun. 18, 2013 (KR) 10-2013-0069906

Publication Classification

(51) **Int. Cl.**
G02F 1/1333 (2006.01)

(52) **U.S. Cl.**
CPC ***G02F 1/133308*** (2013.01); ***G02F 1/13338*** (2013.01)
USPC **349/12**; 349/58

(57) **ABSTRACT**

A liquid crystal panel assembly is provided. The liquid crystal panel assembly includes a liquid crystal panel configured to display an image, a backlight arranged in the rear of the liquid crystal panel and configured to supply light to the liquid crystal panel, a package module configured to package the liquid crystal panel and the backlight into one module, and at least one dummy member arranged to occupy a space provided in the rear of the backlight in the package module.

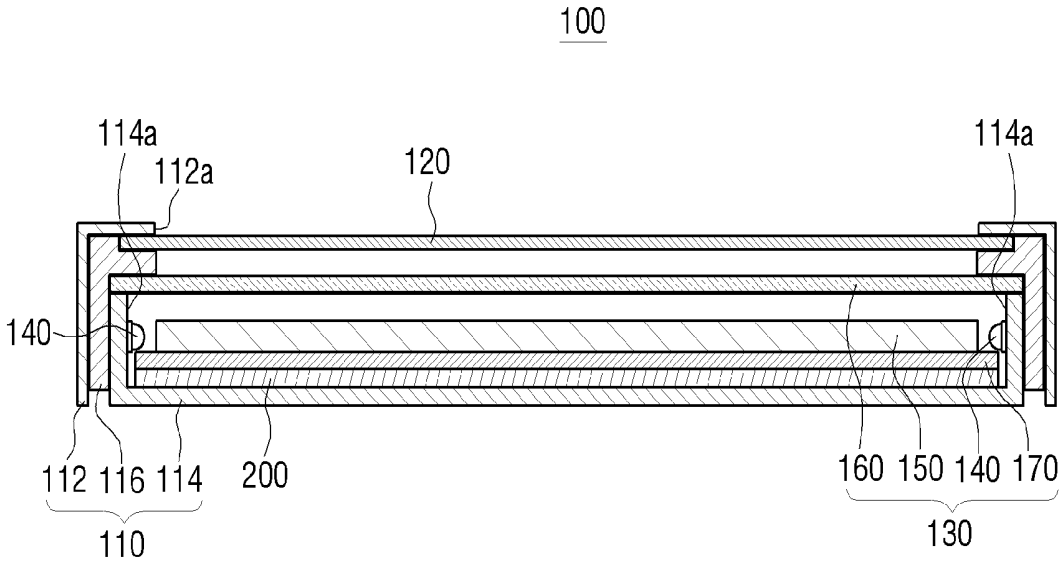

FIG. 1

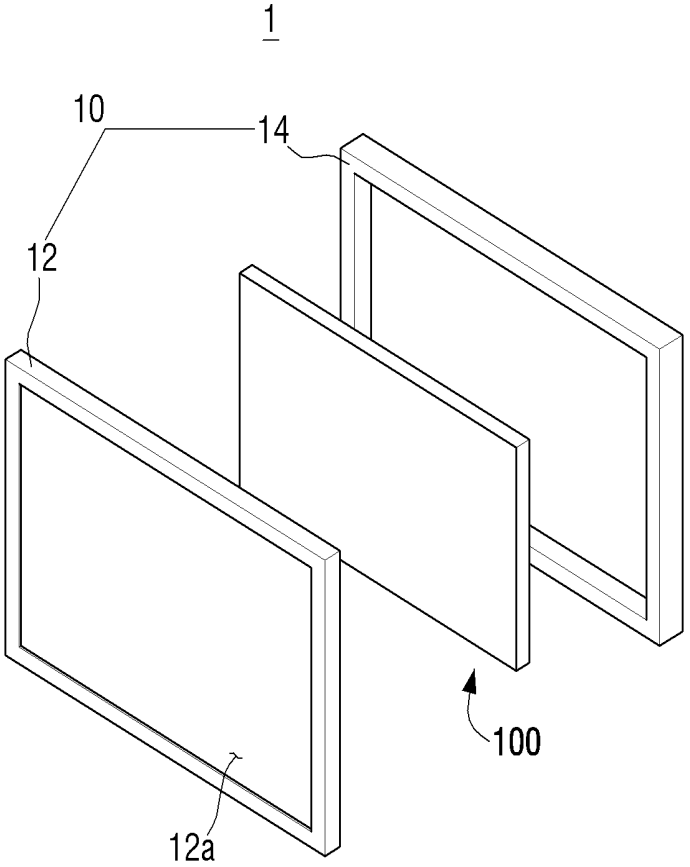

FIG. 2

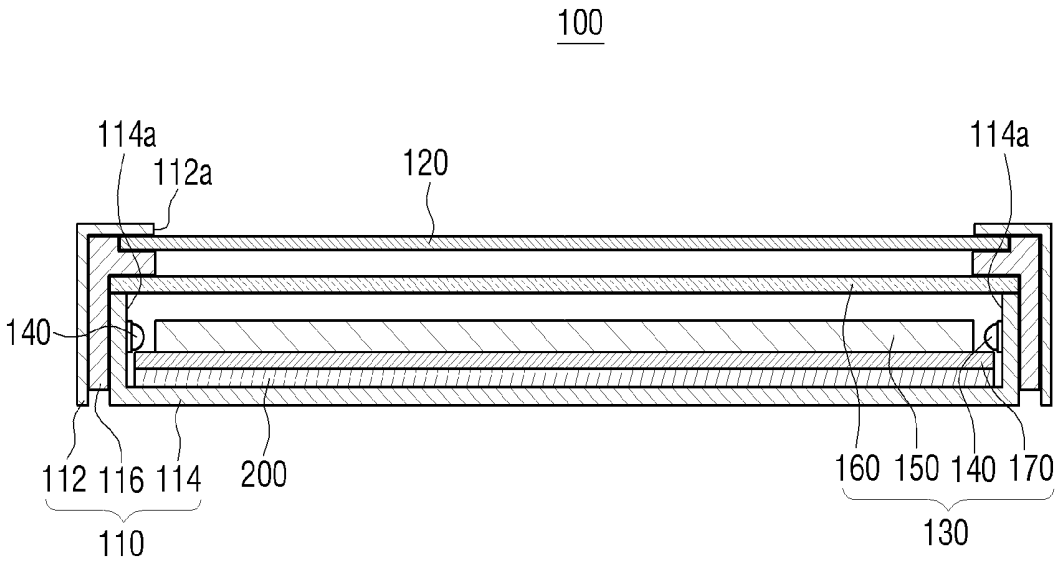
100
114a
112a
120
114a
140
112
116
114
200
160
150
140
170
110
130

FIG. 3

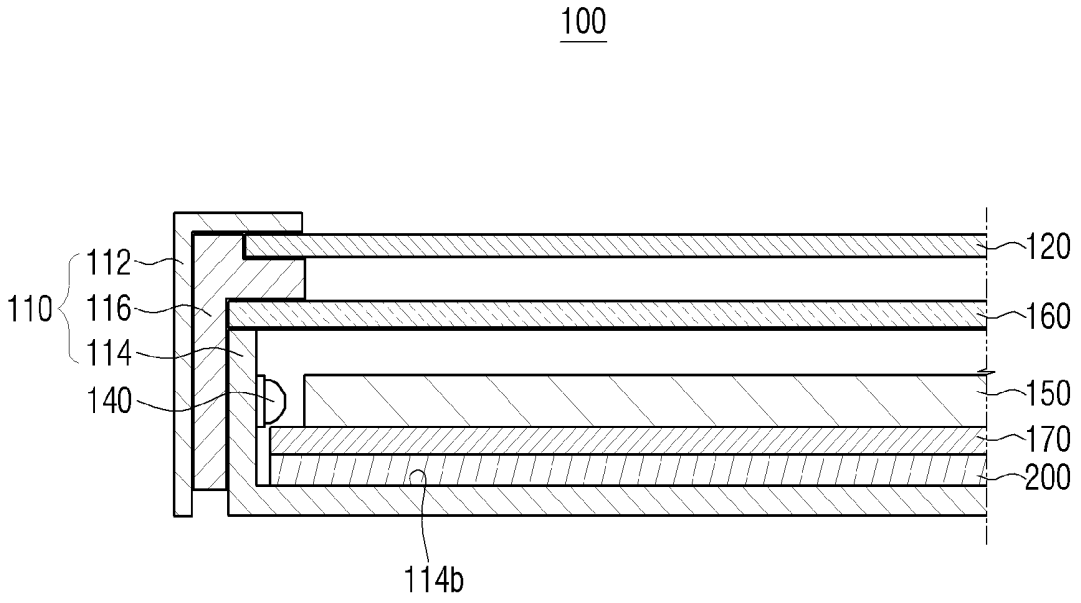

FIG. 4

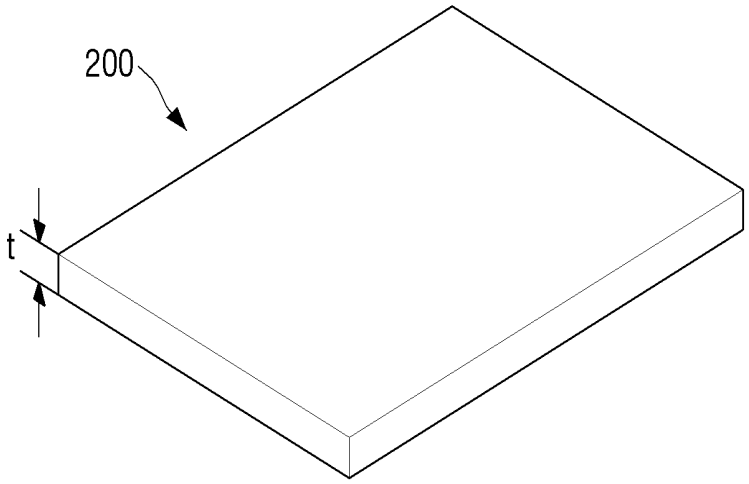

FIG. 5

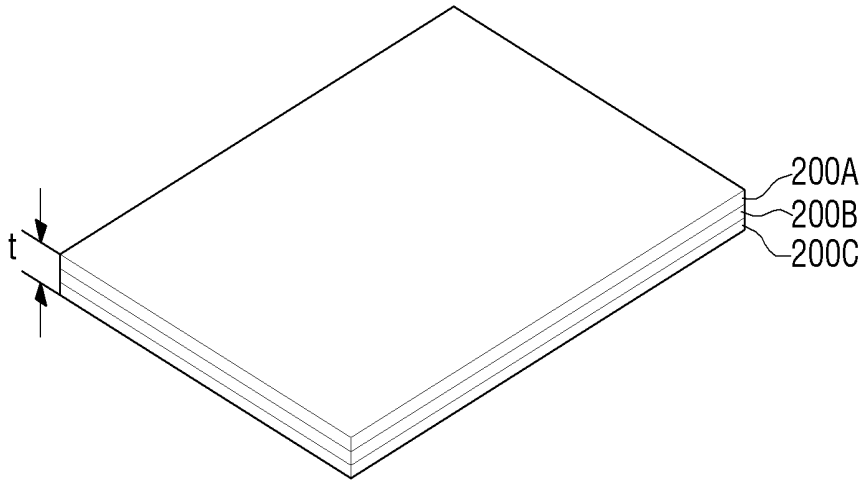

FIG. 6

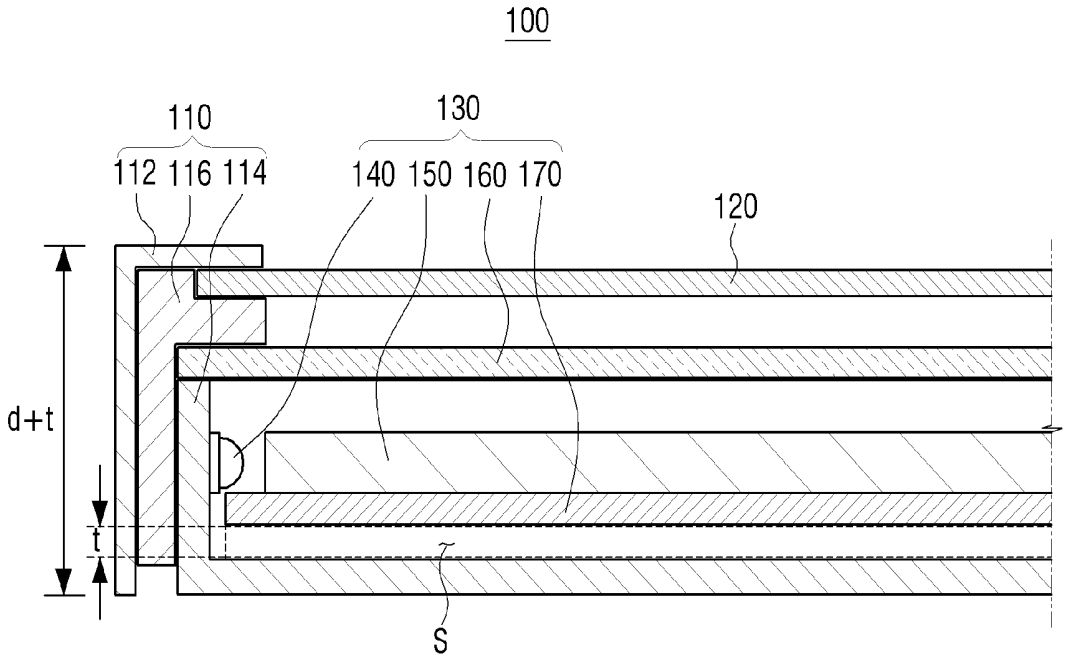

FIG. 7

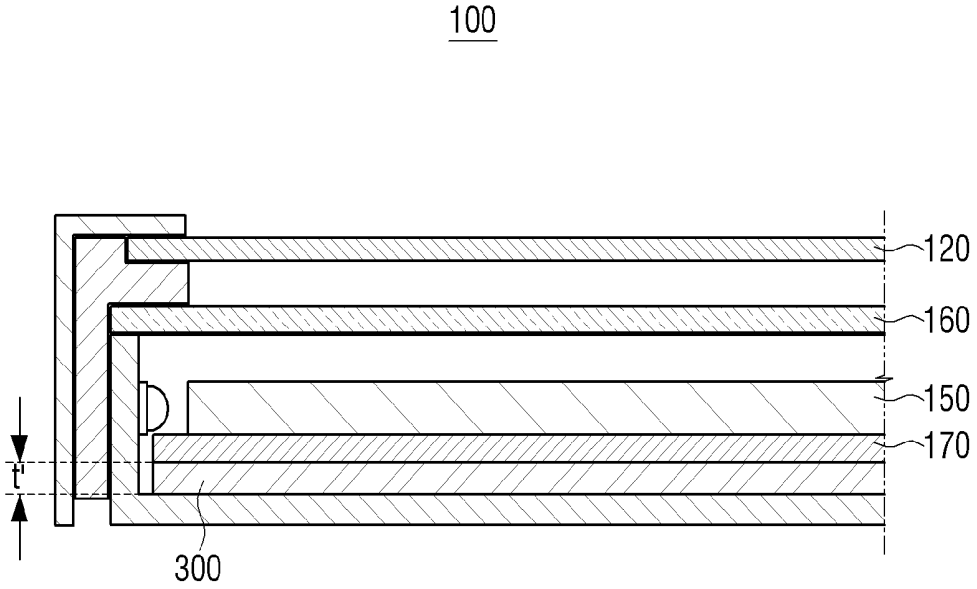

FIG. 8

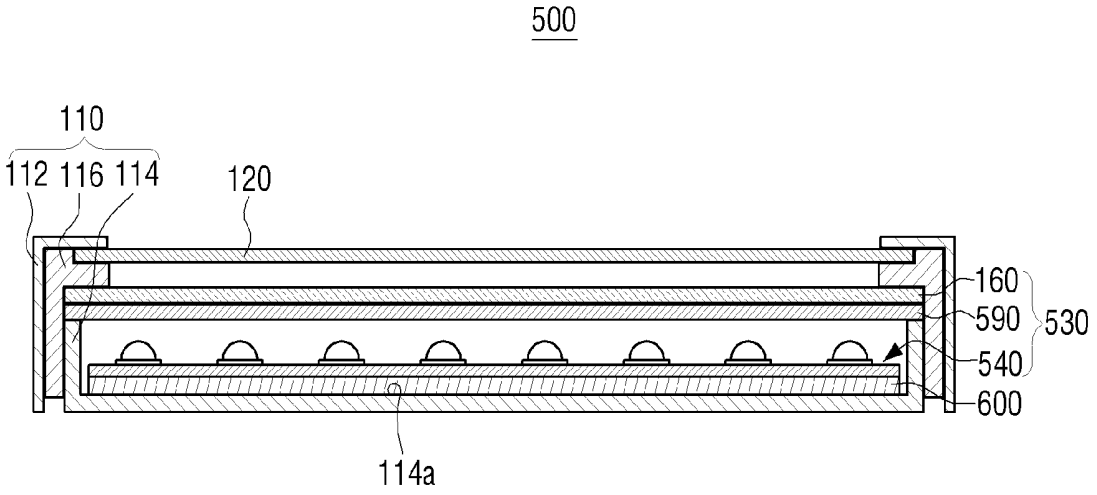

FIG. 9

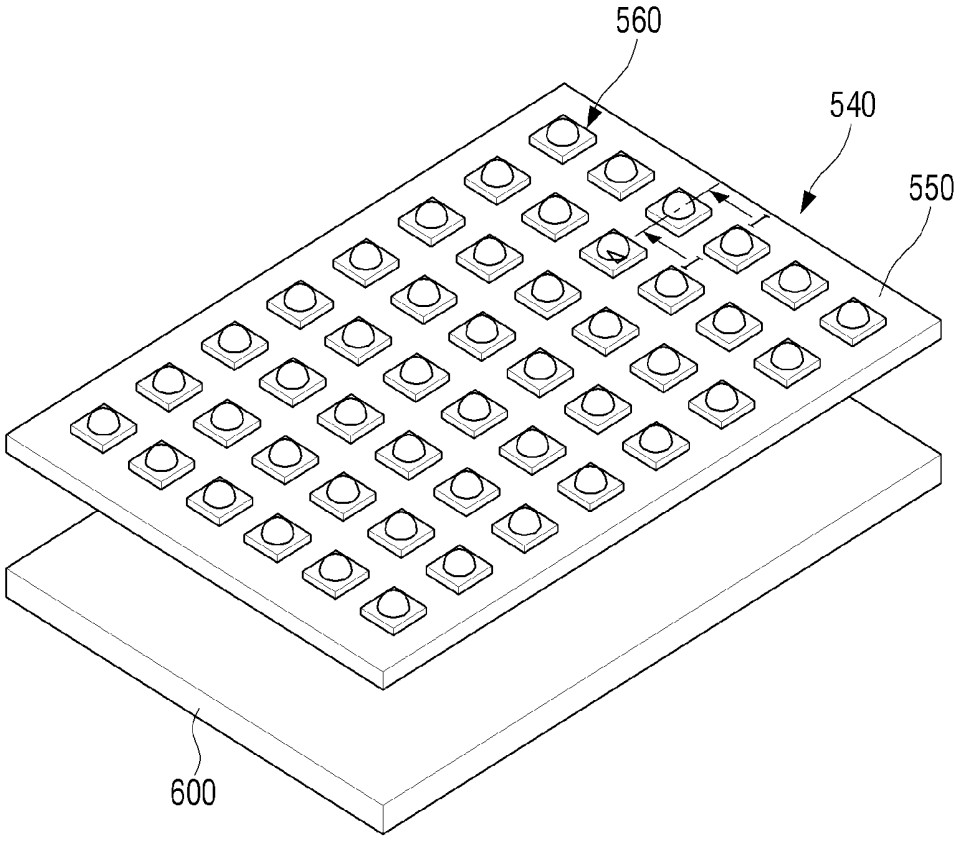

FIG. 10

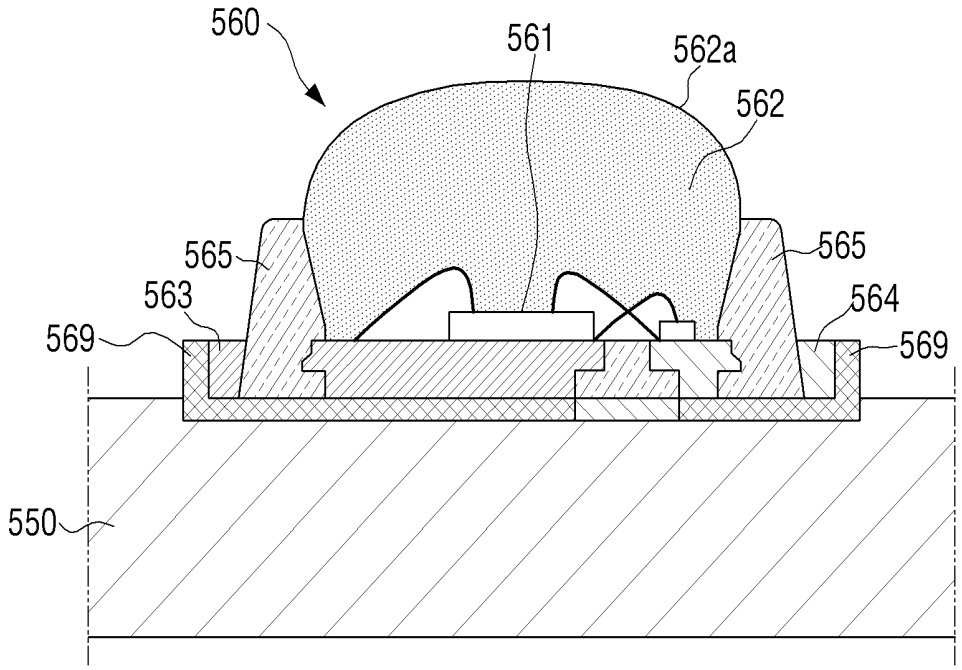

FIG. 11

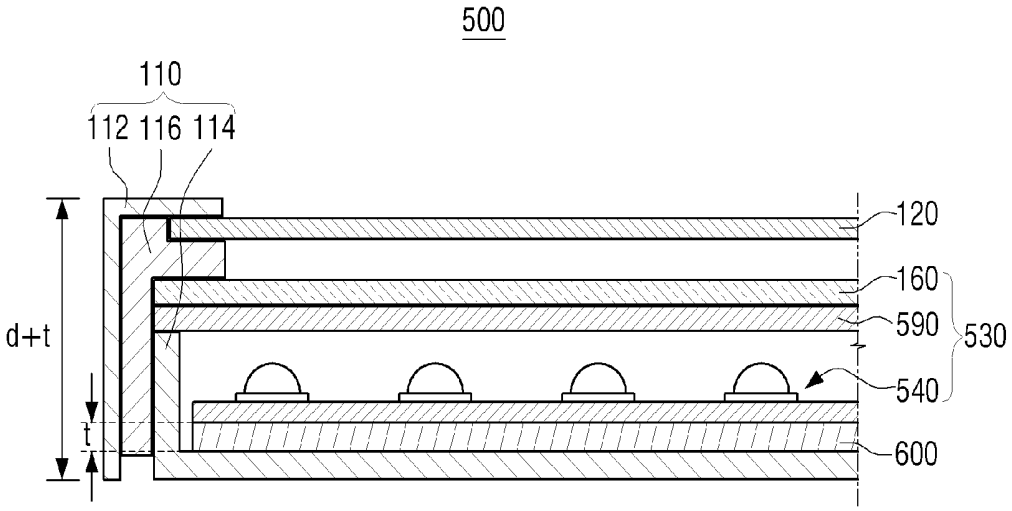

LIQUID CRYSTAL PANEL ASSEMBLY AND LIQUID CRYSTAL DISPLAY DEVICE INCLUDING THE SAME

PRIORITY

[0001] This application claims priority from Korean Patent Application No. 10-2013-0069906, filed on Jun. 18, 2013, in the Korean Intellectual Property Office, the disclosure of which is incorporated herein by reference, in its entirety.

BACKGROUND

[0002] 1. Technical Field

[0003] The exemplary embodiments relate to a liquid crystal panel assembly and a liquid crystal display device including the same.

[0004] 2. Description of the Related Art

[0005] Flat panel display devices are thin, lightweight image display devices, and recently, flat panel display devices and liquid crystal display devices have become the mainstream display devices in the market.

[0006] With popularization of smart phones, liquid crystal display devices, such as televisions or monitors have appeared. They operate through a touch of a liquid crystal panel using an input device, such as a stylus pen. In this case, a liquid crystal display device is provided with a sensor board mounted therein in order to recognize an electrical input signal from an input device.

[0007] In the case where a board for performing additional functions is provided, such as the sensor board as described above, is mounted in the liquid crystal display device in the related art, it becomes necessary to change the internal structure of the liquid crystal display device or to produce a new frame of the liquid crystal display, in order to secure a space for mounting the additional board. That is, in the case of mounting an additional board in the liquid crystal display device in the related art, the liquid crystal display device is unable to be used as is, and this results in a disadvantage in time and cost.

SUMMARY

[0008] The exemplary embodiments have been made to address at least the above problems and/or disadvantages and to provide at least the advantages described below. Accordingly, an aspect of the exemplary embodiments provide a liquid crystal display device which enables an additional board for providing additional functions to be mounted therein, without any mechanical change of the liquid crystal display device.

[0009] According to an aspect of the exemplary embodiments, a liquid crystal panel assembly includes a liquid crystal panel configured to display an image; a backlight arranged in the rear of the liquid crystal panel and configured to supply light to the liquid crystal panel; a package module configured to package the liquid crystal panel and the backlight into one module; and at least one dummy member arranged to occupy a space provided in the rear of the backlight in the package module.

[0010] The dummy member may be replaceable by a sensor board that can recognize an electrical input signal from an outside source in order to provide a touch function.

[0011] The dummy member may be mounted to be separable from the package module.

[0012] The thickness of the dummy member may correspond to the thickness of the sensor board.

[0013] The dummy member may be arranged in parallel to the liquid crystal panel.

[0014] The dummy member may be a PET film or a paper.

[0015] A plurality of dummy members may be provided, and the respective dummy members may be laminated upward and downward.

[0016] The package module may include a front chassis having an opening formed thereon to output an image from the liquid crystal panel to an outside; and a rear chassis coupled to the front chassis to form a space to accommodate the liquid crystal panel and the backlight, wherein the dummy member is mounted on an inner surface of the rear chassis.

[0017] The backlight may include at least one light source; a light guide plate arranged to face the light source; an optical sheet arranged between the liquid crystal panel and the light guide plate; and a reflective sheet arranged in the rear of the light guide plate.

[0018] The dummy member may be arranged between the reflective sheet and the inner surface of the rear chassis.

[0019] The backlight may include at least one light source; a diffusion plate arranged in front of the light source; and an optical sheet arranged between the diffusion plate and the liquid crystal panel.

[0020] The dummy member may be arranged between the light source and the inner surface of the rear chassis.

[0021] According to another aspect of the exemplary embodiments, a liquid crystal display device includes a housing; and a liquid crystal panel assembly, wherein the liquid crystal panel assembly includes a liquid crystal panel configured to display an image; a backlight arranged in the rear of the liquid crystal panel and configured to supply light to the liquid crystal panel; a package module configured to package the liquid crystal panel and the backlight into one module; and at least one dummy member arranged to occupy a space provided in the rear of the backlight in the package module.

[0022] According to the exemplary embodiments described above, in comparison with the liquid crystal display device in the related art, an additional board for additional function can be mounted in the liquid crystal display device without any mechanical change of the liquid crystal display device.

[0023] An aspect of the exemplary embodiments may provide a liquid crystal panel assembly which permits replacement of a dummy board with a sensor board, the assembly including: a liquid crystal panel; a backlight arranged at the rear of the liquid crystal panel; a package module configured to package the liquid crystal panel and the backlight into one module; and at least one dummy member arranged to occupy a space provided in the package module at the rear of the backlight, wherein the dummy member is configured to be replaceable by a sensor board.

[0024] The dummy member may be mounted to be separable from the package module and the thickness of the sensor board may correspond to the thickness of the dummy member.

[0025] The dummy member may be a PET film or may be configured as paper. A plurality of dummy members may be provided, and the respective dummy members may be laminated upward and downward.

BRIEF DESCRIPTION OF THE DRAWINGS

[0026] The above and other aspects, features and advantages of the exemplary embodiments will be more apparent from the following detailed description when taken in conjunction with the accompanying drawings, in which:

[0027] FIG. **1** is an exploded perspective view of a liquid crystal display device according to an exemplary embodiment;

[0028] FIG. **2** is a cross-sectional view of a liquid crystal panel assembly of the liquid crystal display device of FIG. **1**;

[0029] FIG. **3** is enlarged cross-sectional view of a left end region of the liquid crystal panel assembly of FIG. **2**;

[0030] FIG. **4** is a perspective view of a dummy member of the liquid crystal panel assembly of FIG. **2**;

[0031] FIG. **5** is a perspective view of a dummy member of the liquid crystal panel assembly of FIG. **2** according to another exemplary embodiment;

[0032] FIG. **6** is a view which illustrates the shape of the liquid crystal panel assembly of FIG. **3**, excluding a dummy member;

[0033] FIG. **7** is a view which illustrates the shape of the liquid crystal panel assembly of FIG. **3** having a sensor board mounted therein;

[0034] FIG. **8** is a cross-sectional view of a liquid crystal panel assembly according to another exemplary embodiment;

[0035] FIG. **9** is a perspective view illustrating a light source and a dummy member in the liquid crystal panel assembly of FIG. **8**;

[0036] FIG. **10** is a cross-sectional view taken along line I-I of FIG. **9**; and

[0037] FIG. **11** is an enlarged cross-sectional view of a left end region of the liquid crystal panel assembly of FIG. **7**.

DETAILED DESCRIPTION OF THE EXEMPLARY EMBODIMENTS

[0038] Hereinafter, exemplary embodiments are described in detail with reference to the accompanying drawings. Exemplary embodiments to be described hereinafter help provide a comprehensive understanding of the present disclosure, and it should be understood that various modifications can be made, unlike the exemplary embodiments described herein. However, in the description of the exemplary embodiments, a detailed description and illustration of known functions and configurations incorporated herein will be omitted when it may make the subject matter of the present disclosure rather unclear. Further, in the drawings, dimensions of some constituent elements may be exaggerated rather than the actual reduced scales in order to help provide an understanding of the exemplary embodiments.

[0039] FIG. **1** is an exploded perspective view of a liquid crystal display device according to an exemplary embodiment, FIG. **2** is a cross-sectional view of a liquid crystal panel assembly of the liquid crystal display device of FIG. **1**, and FIG. **3** is enlarged cross-sectional view of a left end region of the liquid crystal panel assembly of FIG. **2**.

[0040] A liquid crystal display device **1** may be one of various types of display devices, such as a television, a monitor, a camera, and a smart phone. Hereinafter, explanation will be made based on an assumption that the liquid crystal display device **1** according to this exemplary embodiment is a television.

[0041] Referring to FIG. **1**, a liquid crystal display device **1** includes a housing **10** and a liquid crystal panel assembly **100**.

[0042] The housing **10** accommodates various kinds of components of the liquid crystal display device **1**, such as the liquid crystal panel assembly **100**, a control board (not illustrated) controlling the operation of the liquid crystal panel assembly **100**, and a power board (not illustrated) supplying power to the liquid crystal panel assembly **100**.

[0043] The housing **10** include a front housing **12** and a rear housing **14**, which are detachably coupled to each other. The front housing **12** forms a front border of the liquid crystal display device **1**, and a rectangular front opening **12***a* is formed on the front housing **12** to expose an image to the outside of the housing. The rear housing **14** has an accommodation space provided on an inner side thereof in order to accommodate the various components therein.

[0044] Referring to FIGS. **2** and **3**, the liquid crystal panel assembly **100** includes a package module **110**, a liquid crystal panel **120**, a backlight **130**, and a dummy member **200**.

[0045] The package module **110** packages the liquid crystal panel **120** and the backlight **130** into one module, and includes a front chassis **112**, a rear chassis **114**, and an intermediate chassis **116**.

[0046] The front chassis **112** and the rear chassis **114** are coupled to each other through the medium of the intermediate chassis **116** to form a space for accommodating the various kinds of components of the liquid crystal panel assembly **100**. On the front chassis **112**, an opening **112***a* to the outside is provided for outputting an image from the liquid crystal panel **120**.

[0047] The intermediate chassis **116** supports some components of the liquid crystal panel assembly **100** in association with the front chassis **112** and the rear chassis **114**. For this, the intermediate chassis **116** is arranged in an edge region inside the liquid crystal panel assembly **100**, and is arranged between the front chassis **112** and the rear chassis **114**.

[0048] The liquid crystal panel **120** displays a color image using light provided from the backlight **130**. The liquid crystal panel **120** includes a color filter substrate (not illustrated) having a color filter layer and a thin film transistor substrate (not illustrated) having thin film transistors, and liquid crystals (not illustrated) are accommodated between the color filter substrate and the thin film transistor substrate. Since the liquid crystal panel **120** is a well known configuration, a detailed description thereof will be omitted.

[0049] The backlight **130** supplies light to the liquid crystal panel **120**, and includes a light source **140**, a light guide plate **150**, an optical sheet **160** and a reflective sheet **170**.

[0050] The light source **140** supplies light to the liquid crystal panel **120**, and is mounted on an inner surface of the rear chassis **114**. Specifically, the light source **140** is mounted on both side surfaces **114***a* of the rear chassis **114**, and is arranged to face both side surfaces of the light guide plate **150**. That is, the light source **140** according to this exemplary embodiment is arranged as an edge type of light source.

[0051] The light guide plate **150** is arranged in parallel with the liquid crystal panel **120** between the light sources **140**. The light guide plate **150** converts the light emitted from the light source **140** into a surface light to provide the surface light to the liquid crystal panel **140**.

[0052] The optical sheet **160** is arranged between the liquid crystal panel **120** and the light guide plate **140**, and is fixed by the rear chassis **114** and the intermediate chassis **116**. The optical sheet **160** includes a diffusion sheet and a prism sheet

(not shown), and uniformly diffuses the light output from the light guide plate **150** to improve luminance.

[0053] The reflective sheet **170** is arranged in the rear of the light guide plate **150**. The reflective sheet **170** reflects a lossy light that is emitted in the opposite direction to the liquid crystal panel **120** from the light guide plate **150**, and makes the reflected light incident again to the light guide plate **150**.

[0054] The dummy member **200** is mounted on an inner bottom surface **114***b* of the rear chassis **114** so that it can be separated from the package module **110**. The dummy member **200** is arranged between the reflective sheet **170** and an inner surface **114***b* of the rear chassis **114**, and is arranged in parallel to the liquid crystal panel **120**.

[0055] FIG. **4** is a perspective view of a dummy member of the liquid crystal panel assembly of FIG. **2**, and FIG. **5** is a perspective view of a dummy member of the liquid crystal panel assembly of FIG. **2** according to another exemplary embodiment.

[0056] Referring to FIG. **4**, the dummy member **200** is in the form of a rectangular plate having a predetermined thickness t. However, this is merely exemplary, and the dummy member **200** may have any other shape having the predetermined thickness t. The thickness t of the dummy member **200** corresponds to the thickness t' (see FIG. **7**) of a sensor board **300** (see FIG. **7**), to be described later. In addition, it is preferable that the dummy member **200** be formed to correspond to the shape of the sensor board **300**, to be described later.

[0057] The dummy member **200** may be made of a PET film. In this case, unlike other optical sheets, the dummy member **200** does not require any optical function. That is, an inexpensive PET film of the related art may be used as the dummy member **200**. However, this is merely exemplary, and the dummy member **200** may be made of paper or any other material that does not cause heat generation or experience deformation problems.

[0058] Referring to FIG. **5**, a plurality of dummy members **200**A, **200**B, and **200**C may be provided. The plurality of dummy members **200**A, **200**B, and **200**C are laminated upward and downward and are mounted on the liquid crystal panel assembly **100**. Here, the total thickness t (see FIG. **7**) of the plurality of dummy members **200**A, **200**B, and **200**C corresponds to the thickness t' (see FIG. **7**) of the sensor board **300** (see FIG. **7**) according to the above-described exemplary embodiment. It is also possible that the dummy members **200**A, **200**B, and **200**C are laminated and mounted in the liquid crystal panel assembly **100** with a necessary thickness t.

[0059] FIG. **6** is a view which illustrates the shape of the liquid crystal panel assembly of FIG. **3**, excluding a dummy member.

[0060] Referring to FIG. **6**, in the liquid crystal panel assembly **100**, a space S, which is provided in the rear of the backlight **130** to the extent of the thickness t of the dummy member **200** among the total thickness d+t of the liquid crystal panel assembly, may be secured through the dummy member **200** (see FIG. **3**) in the package module **110**.

[0061] FIG. **7** is a view which illustrates the shape of the liquid crystal panel assembly of FIG. **3** having a sensor board mounted therein.

[0062] Referring to FIG. **7**, the sensor board **300** may additionally be mounted in the liquid crystal panel assembly **100** to provide a touch input function. The sensor board **300** is configured to recognize the electrical input signal from an input device (not illustrated), such as a stylus pen, when the liquid crystal panel **120** is touched by the input device (not illustrated). That is, for a touch input function of the liquid crystal panel assembly **100**, it is essentially required that the sensor board **300** be mounted.

[0063] In the case of mounting such a sensor board **300**, the dummy member **200** (see FIG. **3**) is replaced by the sensor board **300**. That is, the sensor board **300** is arranged in the space S (see FIG. **6**) that is occupied by the dummy member **200** in replacement of the dummy member **200**.

[0064] The liquid crystal panel assembly **100** according to this exemplary embodiment can secure in advance the space S in which the sensor board **300** is mounted through the space for the dummy member **200**, and thus the existing liquid crystal panel assembly **100** can be used even when the sensor board **300** is additionally provided.

[0065] Accordingly, there is no requirement to change the internal structure of the liquid crystal panel assembly **100** or to newly produce the package module **110** of the liquid crystal panel assembly **100**, in order to secure a space for mounting the sensor board **300** therein, and thus the time and cost of securing the space can be saved.

[0066] As described above, it is exemplified that the sensor board **300** for the touch function is added. However, any other additional board for other additional functions other than the sensor board **300** may be mounted in replacement of the dummy member **200**, in the same manner as the sensor board **300** is mounted.

[0067] FIG. **8** is a cross-sectional view of a liquid crystal panel assembly according to another exemplary embodiment. FIG. **9** is a perspective view which illustrates an optical unit and a dummy member in the liquid crystal panel assembly of FIG. **8**, and FIG. **10** is a cross-sectional view taken along line I-I of FIG. **9**. FIG. **11** is an enlarged cross-sectional view of a left end region of the liquid crystal panel assembly of FIG. **7**.

[0068] Referring to FIG. **8**, the liquid crystal panel assembly **500** includes a package module **110**, a liquid crystal panel **120**, and a backlight **530**.

[0069] Since the package module **110** and the liquid crystal panel **120** are the same as those according to the above-described exemplary embodiment, the same reference numerals are given thereto, and the description thereof will be omitted.

[0070] The backlight **530** includes a light source **540**, printed circuit board **550**, and an optical sheet **160**. Since the optical sheet **160** is the same as that according to the above-described exemplary embodiment, the same reference numeral is given thereto, and the description thereof will be omitted.

[0071] The light source **540** is arranged in parallel with the liquid crystal panel **120** in the rear of the liquid crystal panel **120**. That is, in this exemplary embodiment, the light source **540** is of a direct type. Referring to FIG. **9**, the light source **540** includes a printed circuit board **550** of a rectangular plate shape and a plurality of light source packages **560** mounted on the printed circuit board **550** to generate light.

[0072] The printed circuit board **550** supports the plurality of light source packages **560** packaged on an upper surface thereof, and transfers power that is supplied from a power source to the light source packages **560**.

[0073] The light source packages **560** provide light toward the liquid crystal panel **120**. The structure of the light source package **560** will be described with reference to FIG. **10**, which is a cross-sectional view taken along line I-I in FIG. **9**.

[0074] Referring to FIG. **10**, the light source package **560** is mounted on the printed circuit board **550** using soldering, and includes a light emitting diode **561**, a phosphor **562**, a pair of electrodes **563** and **564**, and a frame **565**.

[0075] The light emitting diode **561** is a device that generates light as is well known. The phosphor **562** converts the light of a specific color that is generated by the light emitting diode **561** into another color (e.g., white color) that is suitable for the purpose of the light source **540**. The phosphor **562** serves to widely diffuse the light through its outer surface **562***a* which is in the shape of a convex lens. As an alternative, an optical lens (not illustrated) that is arranged to cover the light source package **560** may replace the diffusion function of the phosphor **562**. The pair of electrodes **563** and **564** are electrically connected to the light emitting diode **561** to the printed circuit board **550**, and the frame **565** packages the light emitting diode **561**, the phosphor **562**, and the pair of electrodes **563** and **564**.

[0076] Referring again to FIG. **8**, the diffusion plate **590** supports the optical sheet **160**, and is arranged in parallel with the liquid crystal panel **120**. The diffusion plate **590** uniformly diffuses the light emitted from the plurality of light source packages **560**.

[0077] As in the above-described exemplary embodiment, the dummy member **600** is mounted on the inner bottom surface **114***b* of the rear chassis **114** so that it can be separated from the package module **110**. The dummy member **200** is arranged between the light source **540** and the inner surface **114***b* of the rear chassis **114**, and is arranged in parallel to the liquid crystal panel **120**. Through this, the dummy member **600** supports the printed circuit board **550** of the light source **540** in the case where the dummy member **600** is mounted on the package module **110**, as illustrated in FIG. **9**.

[0078] Referring to FIG. **11**, the liquid crystal panel assembly **500** according to this exemplary embodiment can secure a space, which is provided in the rear of the backlight **130** to the extent of the thickness t of the dummy member **200** among the total thickness d+t of the liquid crystal panel assembly **500** as in the above-described exemplary embodiment. That is, even in the direct type liquid crystal panel assembly **500**, an additional board, such as the above-described sensor board **300** (see FIG. **7**), can be mounted in a state where the existing liquid crystal panel assembly **500** is used as is.

[0079] As a result, in any case of an edge type and a direct type display, the liquid crystal display device **1** according to this exemplary embodiment can use an existing mechanical frame, as is, when the additional board, such as the sensor board, is mounted in the location where the dummy member is seated.

[0080] While the present disclosure has been shown and described with reference to certain exemplary embodiments thereof, it will be understood by those skilled in the art that various changes in form and detail may be made therein without departing from the spirit and scope of the present disclosure, as defined by the appended claims.

What is claimed is:

1. A liquid crystal panel assembly comprising:

a liquid crystal panel configured to display an image;

a backlight arranged at the rear of the liquid crystal panel and configured to supply light to the liquid crystal panel;

a package module configured to package the liquid crystal panel and the backlight into one module; and

at least one dummy member arranged to occupy a space provided in the package module at the rear of the backlight.

2. The liquid crystal panel assembly as claimed in claim **1**, wherein the dummy member is configured to be replaceable by a sensor board configured to recognize an electrical input signal from an outside for a touch function.

3. The liquid crystal panel assembly as claimed in claim **2**, wherein the dummy member is mounted to be separable from the package module.

4. The liquid crystal panel assembly as claimed in claim **2**, wherein the thickness of the sensor board corresponds to the thickness of the dummy member.

5. The liquid crystal panel assembly as claimed in claim **1**, wherein the dummy member may be arranged in parallel with the liquid crystal panel.

6. The liquid crystal panel assembly as claimed in claim **1**, wherein the dummy member is a PET film or is configured as paper.

7. The liquid crystal panel assembly as claimed in claim **1**, wherein a plurality of dummy members are provided, and

the respective dummy members are laminated upward and downward.

8. The liquid crystal panel assembly as claimed in claim **1**, wherein the package module comprises:

a front chassis having an opening formed thereon to output an image from the liquid crystal panel to outside the liquid crystal panel assembly; and

a rear chassis coupled to the front chassis to form a space which accommodates the liquid crystal panel and the backlight,

wherein the dummy member is mounted on an inner surface of the rear chassis.

9. The liquid crystal panel assembly as claimed in claim **8**, wherein the backlight comprises:

at least one light source;

a light guide plate arranged to face the light source;

an optical sheet arranged between the liquid crystal panel and the light guide plate; and

a reflective sheet arranged at the rear of the light guide plate.

10. The liquid crystal panel assembly as claimed in claim **9**, wherein the dummy member is arranged between the reflective sheet and the inner surface of the rear chassis.

11. The liquid crystal panel assembly as claimed in claim **8**, wherein the backlight comprises:

at least one light source;

a diffusion plate arranged in front of the light source; and

an optical sheet arranged between the diffusion plate and the liquid crystal panel.

12. The liquid crystal panel assembly as claimed in claim **11**, wherein the dummy member is arranged between the light source and the inner surface of the rear chassis.

13. A liquid crystal display device comprising:

a housing; and

a liquid crystal panel assembly,

wherein the liquid crystal panel assembly comprises:

a liquid crystal panel configured to display an image;

a backlight arranged at the rear of the liquid crystal panel and configured to supply light to the liquid crystal panel;

a package module configured to package the liquid crystal panel and the backlight into one module; and

at least one dummy member arranged to occupy a space provided at the rear of the backlight in the package module.

14. A liquid crystal panel assembly which permits replacement of a dummy board with a sensor board, the assembly comprising:

a liquid crystal panel;

a backlight arranged at the rear of the liquid crystal panel;

a package module configured to package the liquid crystal panel and the backlight into one module; and

at least one dummy member arranged to occupy a space provided in the package module at the rear of the backlight,

wherein the dummy member is configured to be replaceable by a sensor board.

15. The liquid crystal panel assembly as claimed in claim **14**, wherein the dummy member is mounted to be separable from the package module.

16. The liquid crystal panel assembly as claimed in claim **14**, wherein the thickness of the sensor board corresponds to the thickness of the dummy member.

17. The liquid crystal panel assembly as claimed in claim **14**, wherein the dummy member is a PET film or is configured as paper.

18. The liquid crystal panel assembly as claimed in claim **14**, wherein a plurality of dummy members are provided, and the respective dummy members are laminated upward and downward.

* * * * *

专利名称(译)	液晶面板组件和包括该液晶面板组件的液晶显示装置		
公开(公告)号	US20140368751A1	公开(公告)日	2014-12-18
申请号	US14/168226	申请日	2014-01-30
[标]申请(专利权)人(译)	三星电子株式会社		
申请(专利权)人(译)	SAMSUNG ELECTRONICS CO. , LTD.		
当前申请(专利权)人(译)	SAMSUNG ELECTRONICS CO. , LTD.		
[标]发明人	HAN YOUNG RAN CHOI KYOUNG OH CHOI HYUN MOOK		
发明人	HAN, YOUNG-RAN CHOI, KYOUNG-OH CHOI, HYUN-MOOK		
IPC分类号	G02F1/1333		
CPC分类号	G02F1/13338 G02F1/133308 G02F2001/133314 G02F2001/133325		
优先权	1020130069906 2013-06-18 KR		
其他公开文献	US9360694		
外部链接	Espacenet USPTO		

摘要(译)
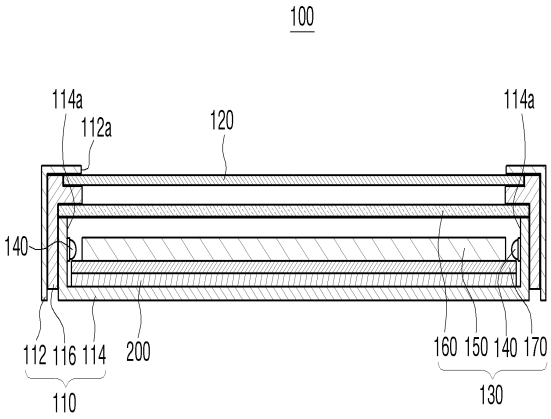
提供一种液晶面板组件。液晶面板组件包括：液晶面板，被配置为显示图像;背光，被布置在液晶面板的后部并被配置为向液晶面板提供光;封装模块，被配置为封装液晶面板和背光到一个模块中，并且至少一个虚设构件布置成占据封装模块中的背光源的后部中提供的空间。