US 20160033814A1

(19) United States

(12) Patent Application Publication

NA et al.

(10) Pub. No.: US 2016/0033814 A1

(43) Pub. Date: Feb. 4, 2016

(54) **LIQUID CRYSTAL DISPLAY PANEL AND MANUFACTURING METHOD THEREOF**

(71) Applicant: **SAMSUNG DISPLAY CO., LTD.**, Yongin-City (KR)

(72) Inventors: **Byoung Sun NA**, Seoul (KR); **Hee June KWAK**, Yongin-si (KR); **Seok Kyu YOON**, Asan-si (KR); **Sang-Uk LIM**, Yongin-si (KR); **Seung Soo BAEK**, Hwaseong-si (KR); **Seong Young LEE**, Hwaseong-si (KR); **Wan-Soon IM**, Cheonan-si (KR)

(21) Appl. No.: **14/568,525**

(22) Filed: **Dec. 12, 2014**

(30) **Foreign Application Priority Data**

Jul. 30, 2014 (KR) 10-2014-0097531

Publication Classification

(51) **Int. Cl.**

G02F 1/1335	(2006.01)
G02F 1/1333	(2006.01)
G02F 1/1339	(2006.01)

(52) **U.S. Cl.**

CPC ***G02F 1/133514*** (2013.01); ***G02F 1/133516*** (2013.01); ***G02F 1/1339*** (2013.01); ***G02F 1/133305*** (2013.01); ***G02F 1/133512*** (2013.01); *G02F 2001/13396* (2013.01); *G02F 2001/13398* (2013.01)

(57) **ABSTRACT**

Provided are a liquid crystal display panel and a manufacturing method thereof, and more particularly, a liquid crystal display panel including white pixels and a manufacturing method thereof. The liquid crystal display panel includes: a first substrate and a second substrate facing each other; a liquid crystal layer positioned between the first substrate and the second substrate; a plurality of color filters positioned on the first substrate and representing different colors from each other, in which at least two of the plurality of color filters overlap with each other on the first substrate to form an overlapping portion, and the overlapping portion forms a first spacer; a transparent filter positioned on the first substrate and positioned in a transmitting area of a white pixel; and a second spacer including the same material as the transparent filter.

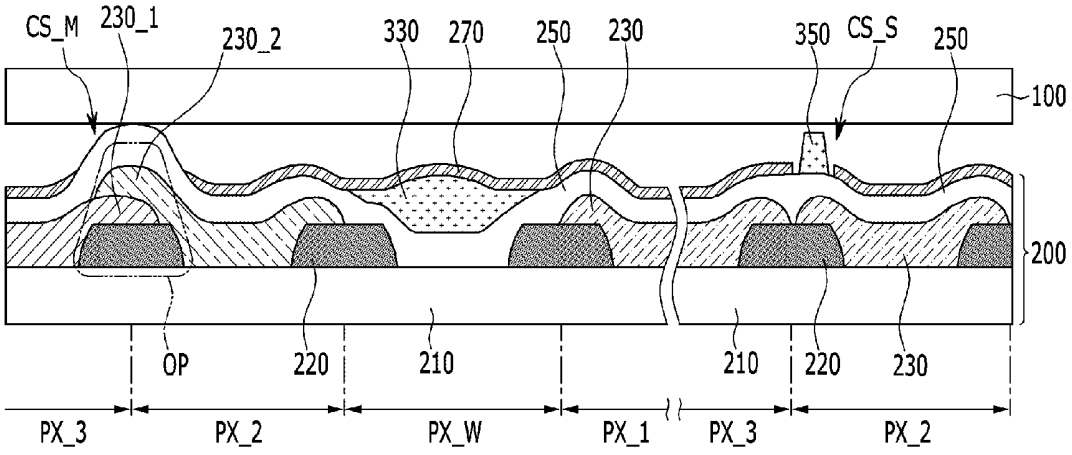

FIG. 1A

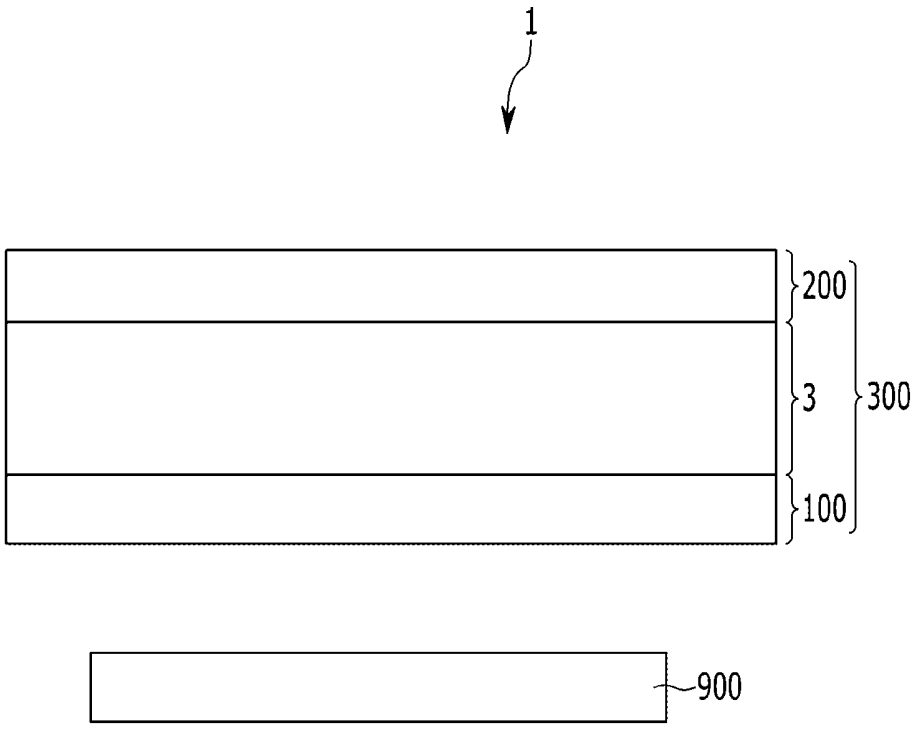

FIG. 1B

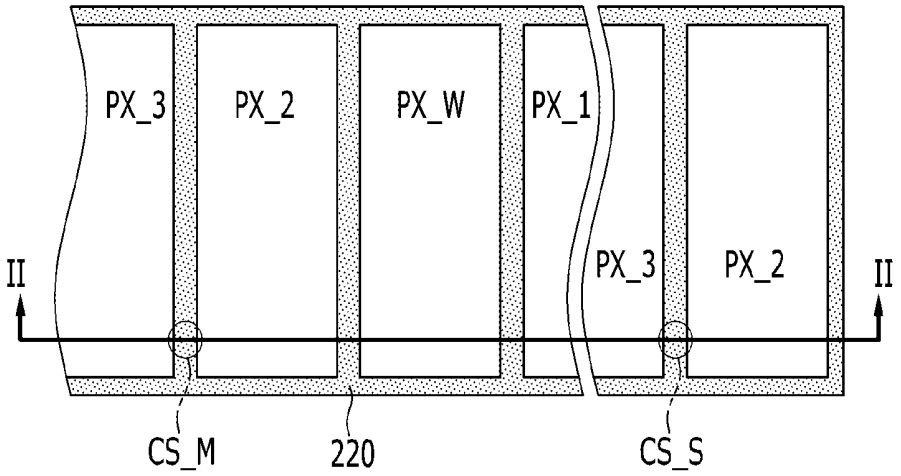

FIG. 2

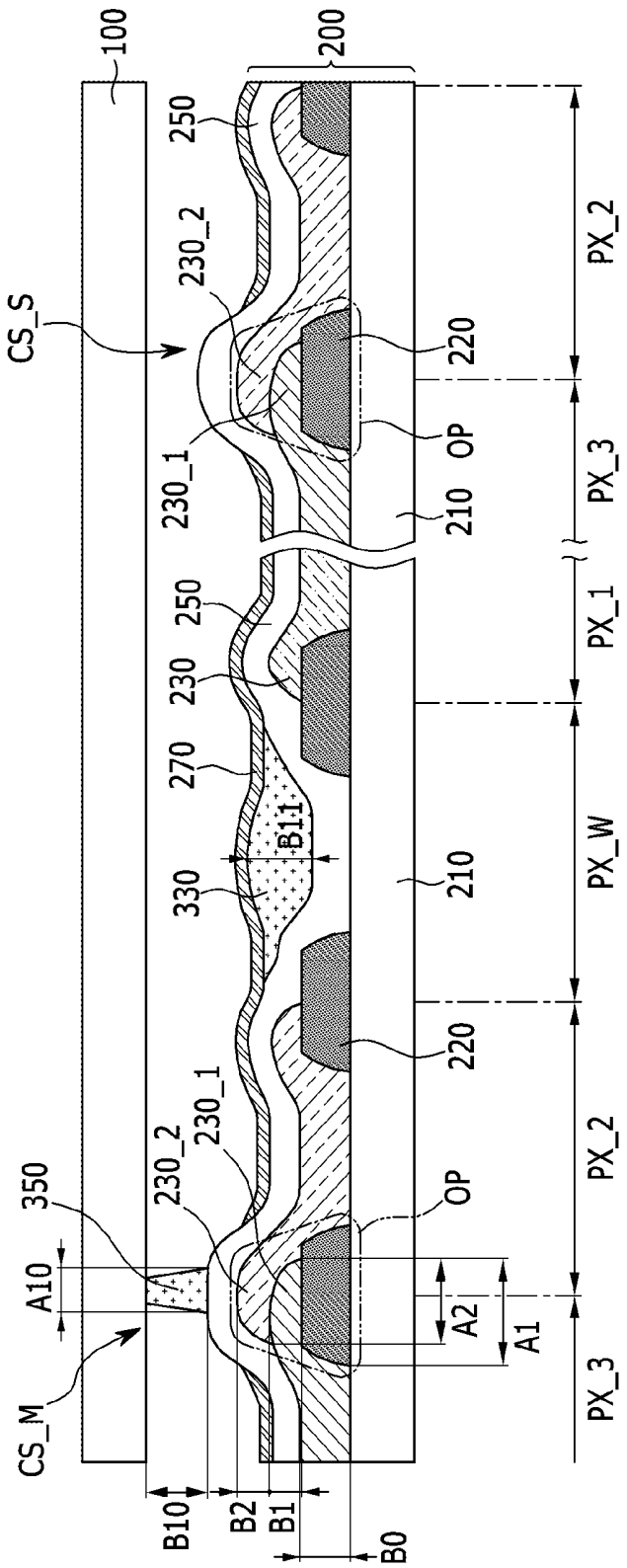
100
200
250
230_2
CS_S
220
OP
230_1
210
PX_2
PX_3
PX_1
PX_W
230
270
B11
330
350
A10
CS_M
A2
A1
B10
B2
B1
B0

FIG. 3

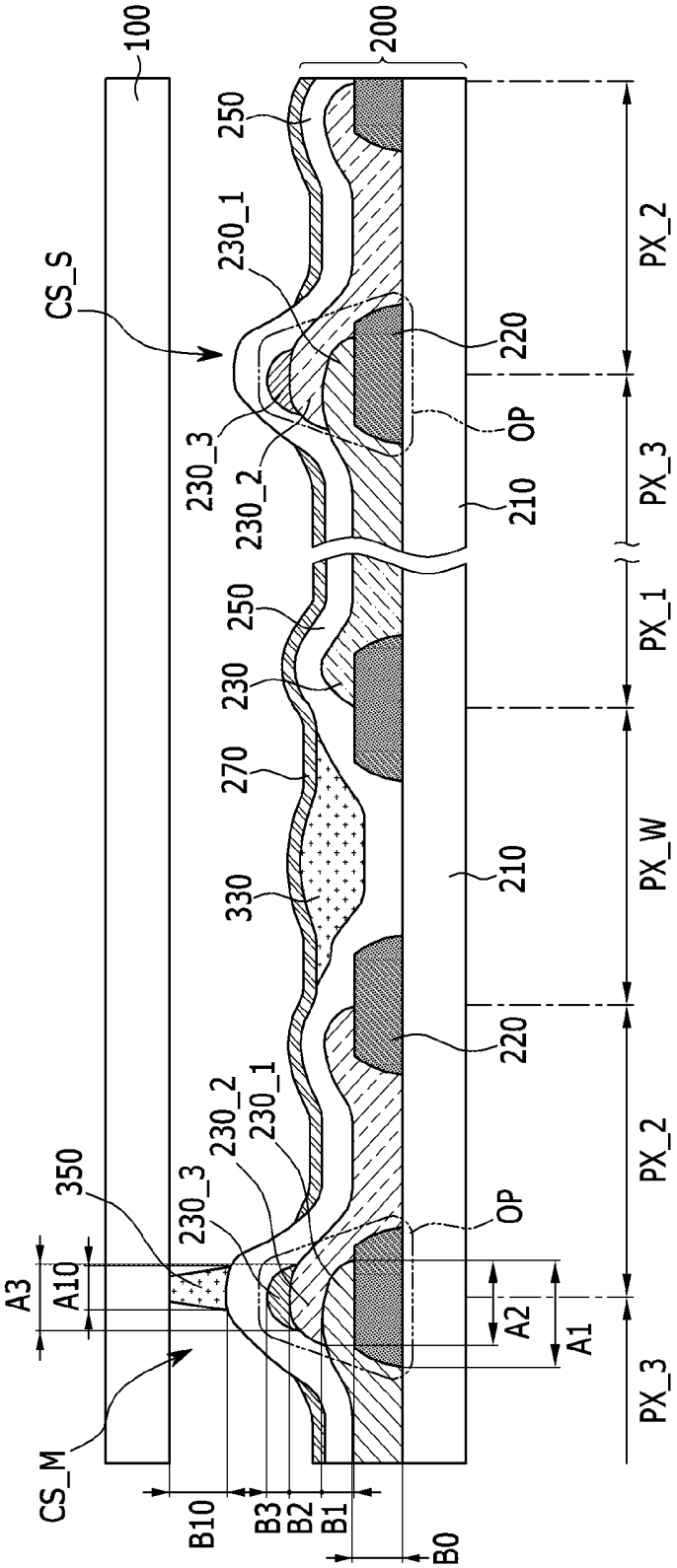
100
200
250
230_1
CS_S
220
OP
230_3
230_2
210
PX_2
PX_3
PX_1
PX_W
230
270
330
350
A3
A10
CS_M
B10
B3
B2
B1
B0
A2
A1

FIG. 4

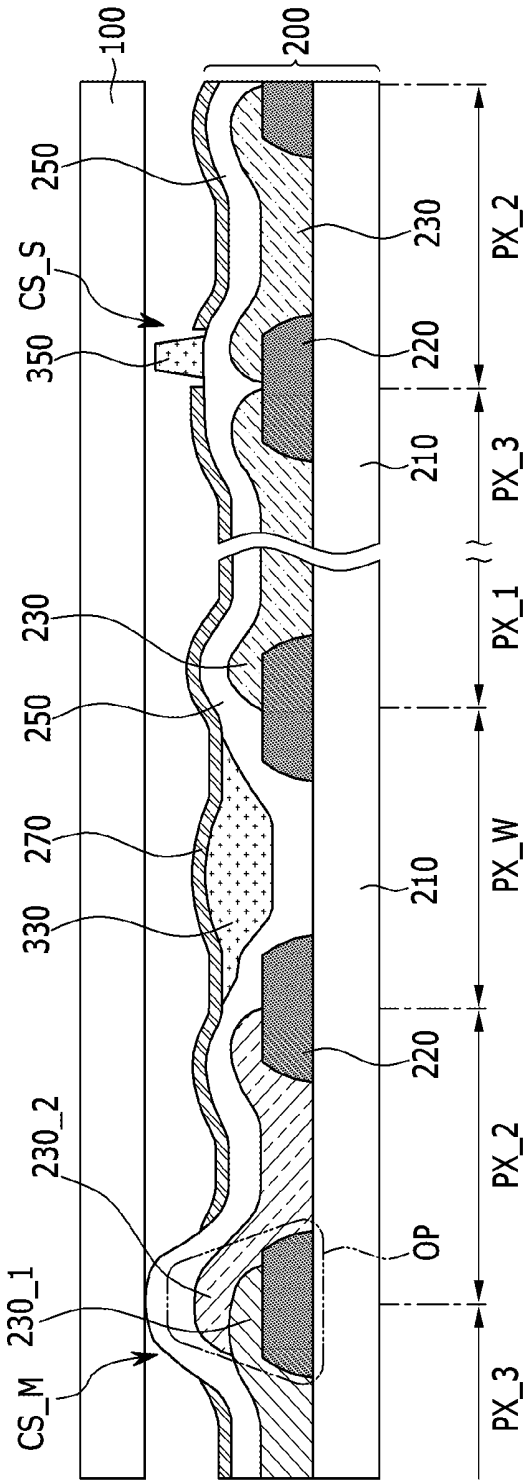
100
200
250
CS_S
350
230
250
270
330
230_2
230_1
CS_M
230
220
210
220
210
OP
PX_2
PX_3
PX_1
PX_W
PX_2
PX_3

FIG. 5

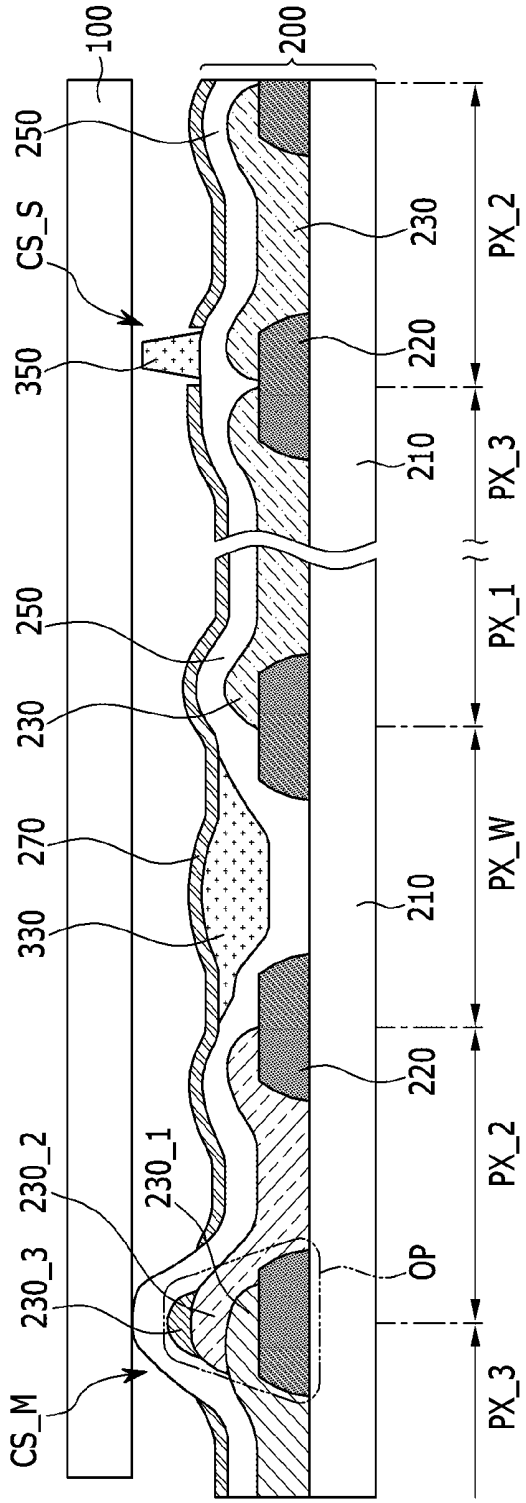
100
200
250
CS_S
350
250
230
270
330
230_2
230_1
230_3
CS_M
230
220
210
PX_2
PX_3
PX_1
PX_W
210
220
OP
PX_2
PX_3

FIG. 6

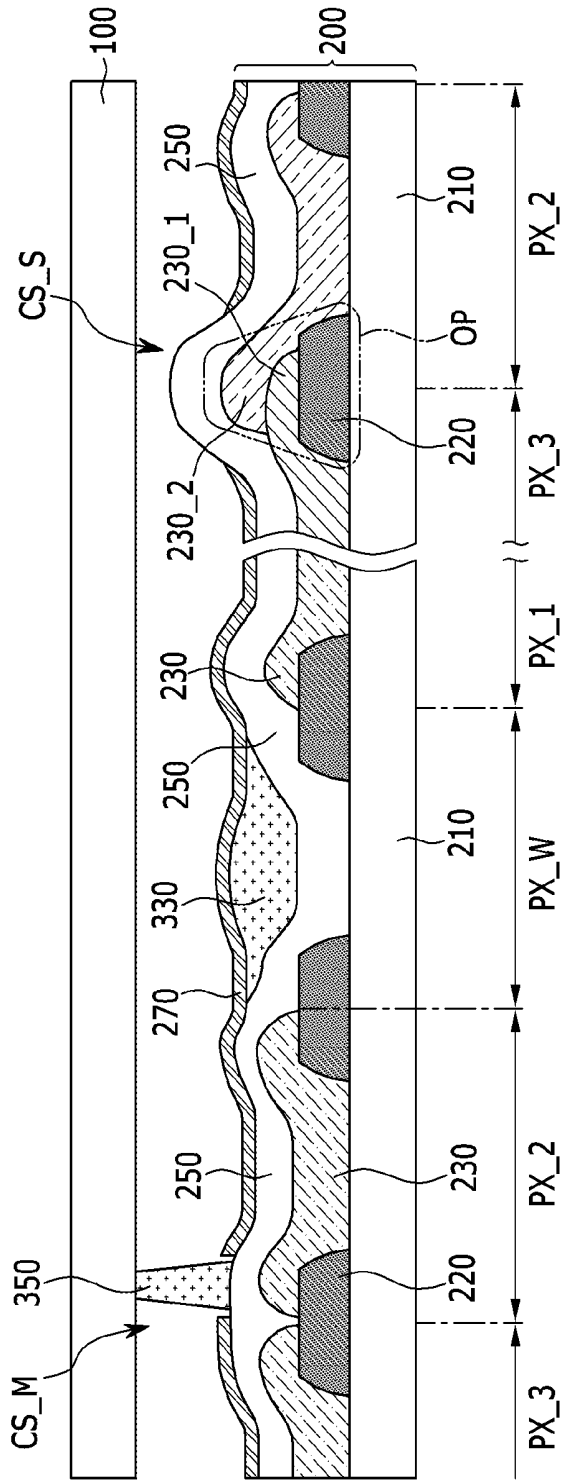
100
200
CS_S
250
230_1
230_2
OP
210
220
PX_2
PX_3
230
250
330
270
PX_1
PX_W
210
250
230
220
350
CS_M
PX_2
PX_3

FIG. 7

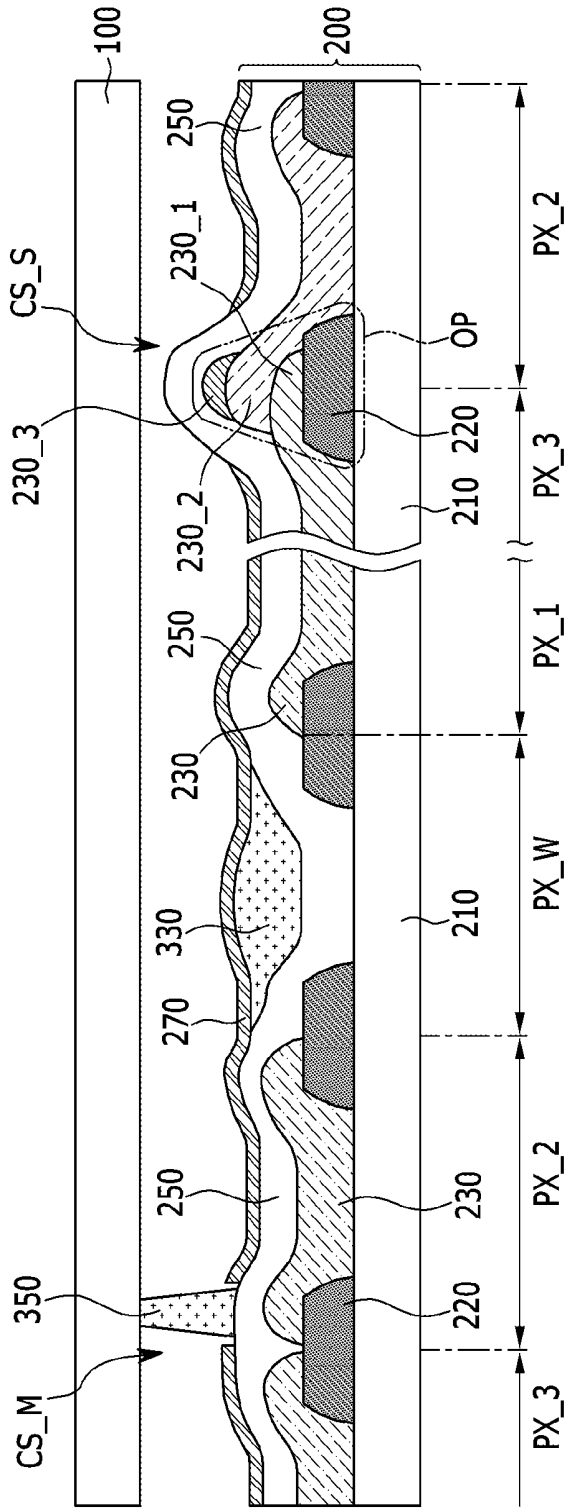
100
200
CS_S
230_3
250
230_1
230_2
OP
220
210
PX_2
PX_3
250
230
PX_1
330
270
PX_W
210
250
230
PX_2
350
220
CS_M
PX_3

FIG. 8A

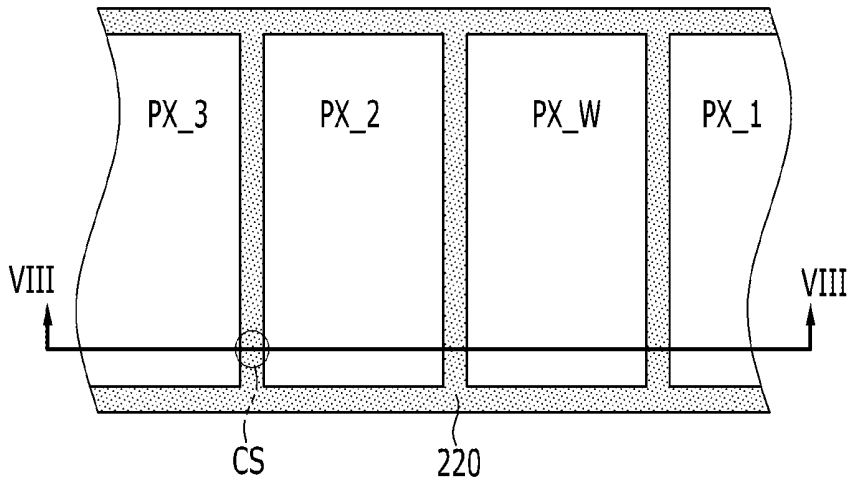

FIG. 8B

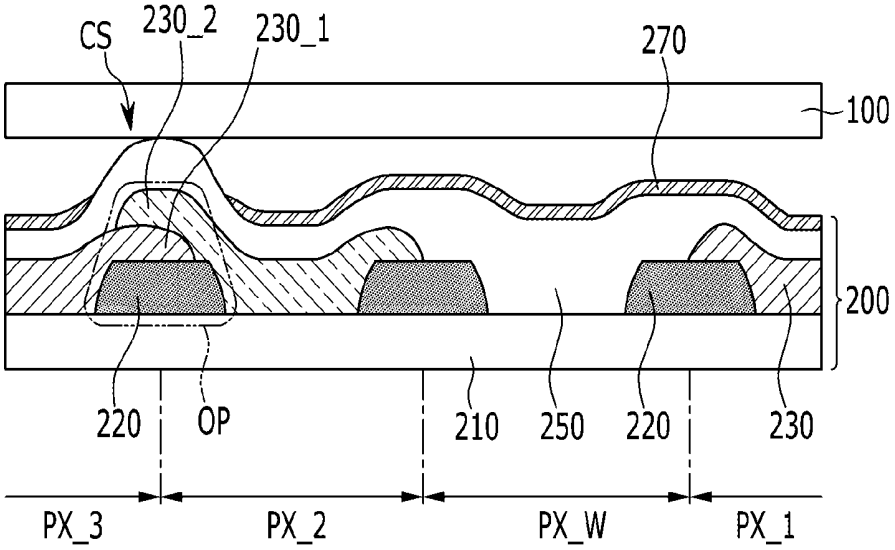

FIG. 9

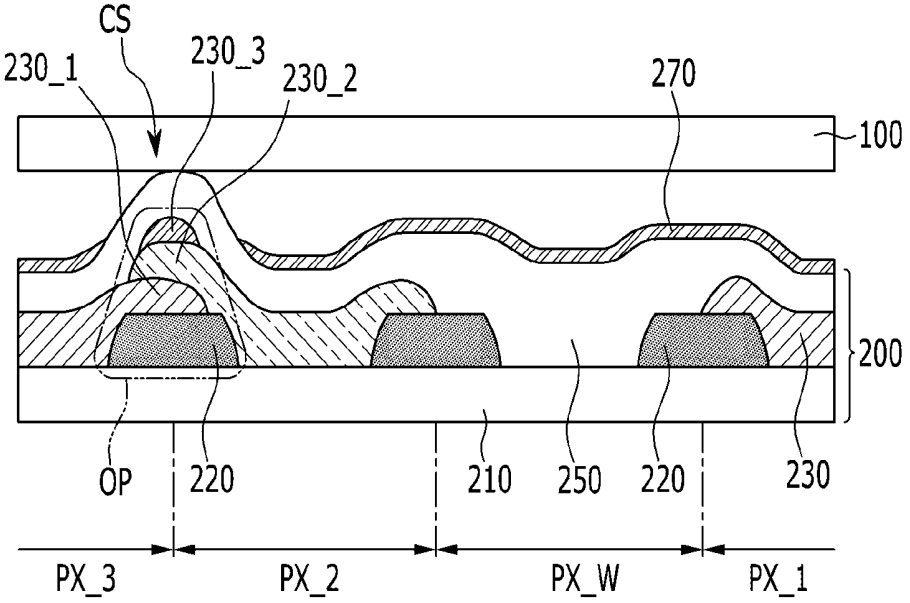
CS
230_1
230_3
230_2
270
100
200
OP
220
210
250
220
230
PX_3
PX_2
PX_W
PX_1

FIG. 10A

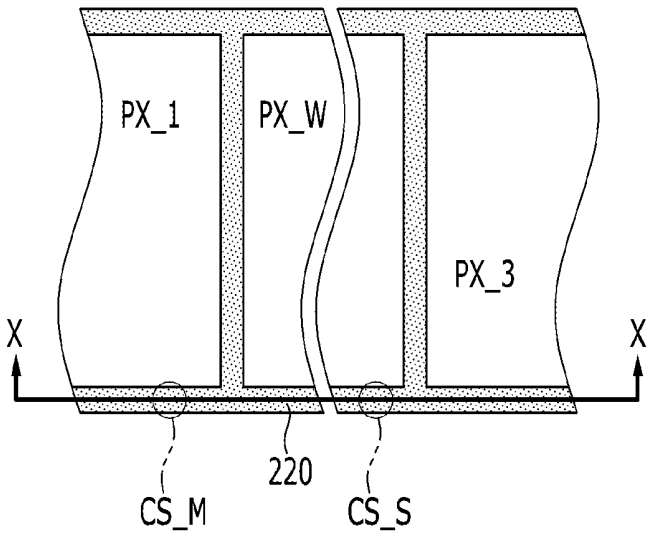

FIG. 10B

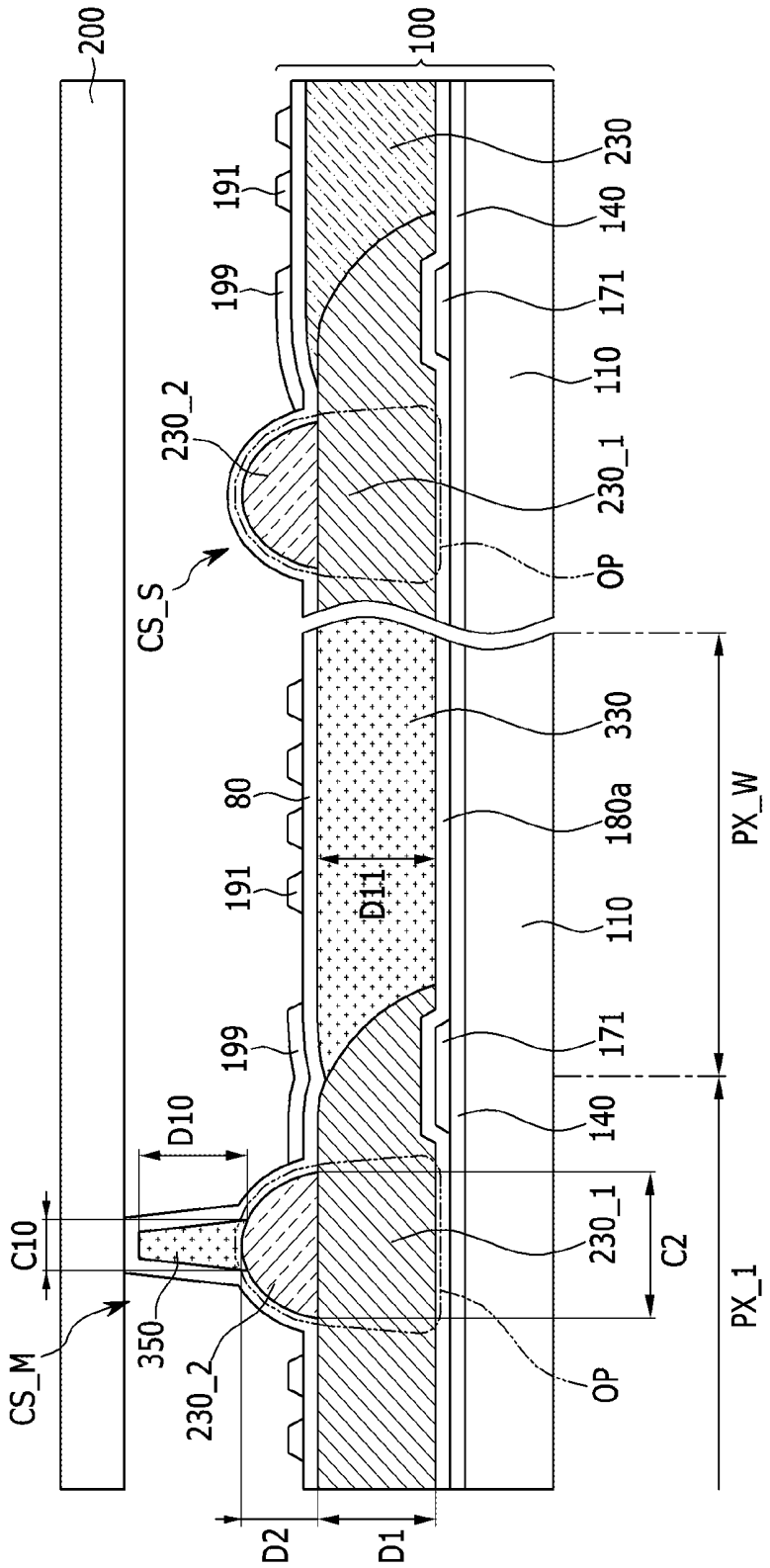
200
100
191
199
230_2
CS_S
230
140
171
110
230_1
OP
330
80
180a
191
D11
110
199
171
D10
140
C10
230_1
C2
CS_M
350
230_2
OP
PX_W
PX_1
D2
D1

FIG. 11

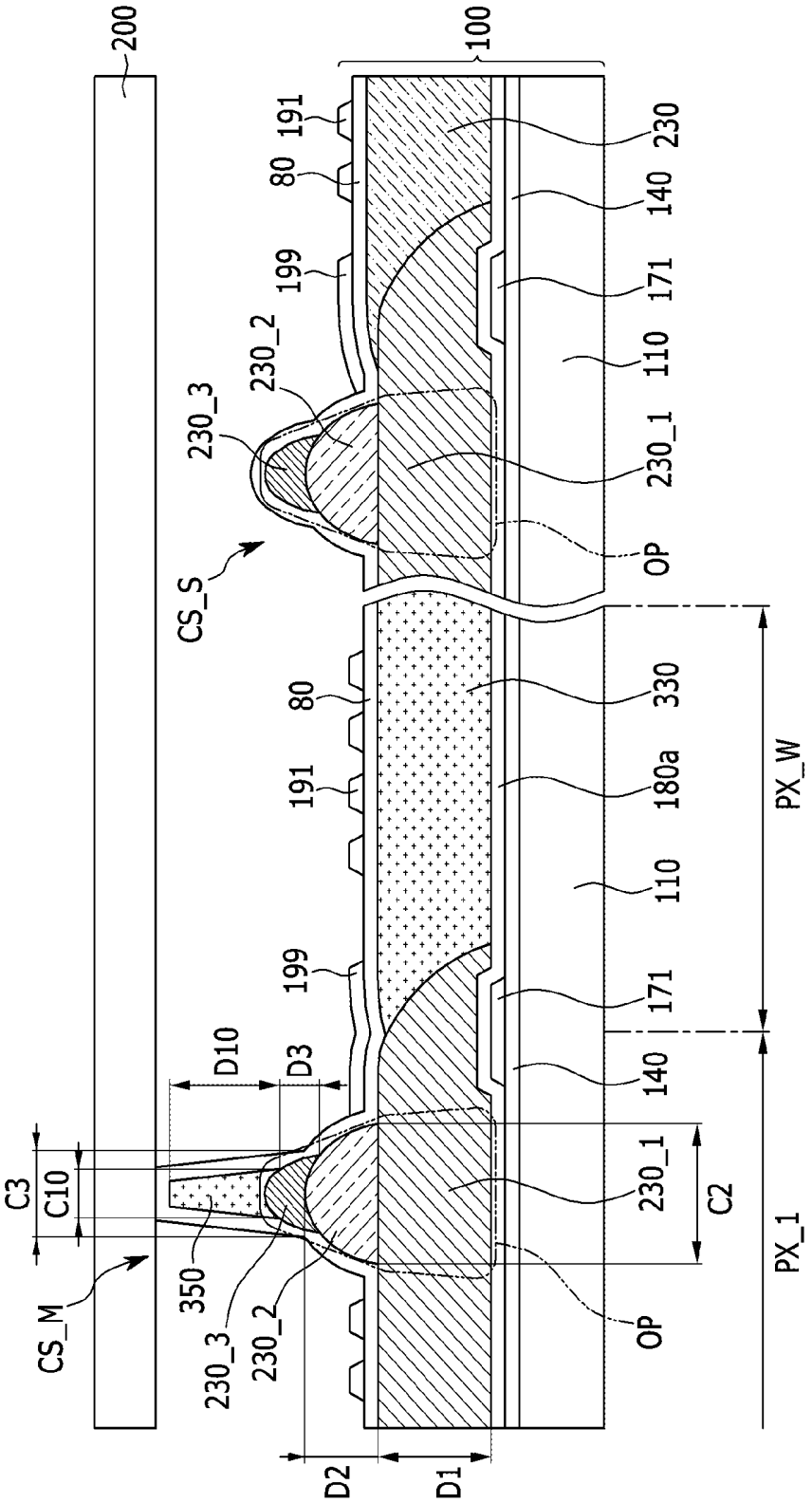
200
100
191
80
199
230_2
230_3
CS_S
230
140
171
110
230_1
OP
80
191
199
330
180a
110
171
140
PX_W
PX_1
D10
D3
C3
C10
CS_M
350
230_3
230_2
230_1
C2
OP
D2
D1

FIG. 12

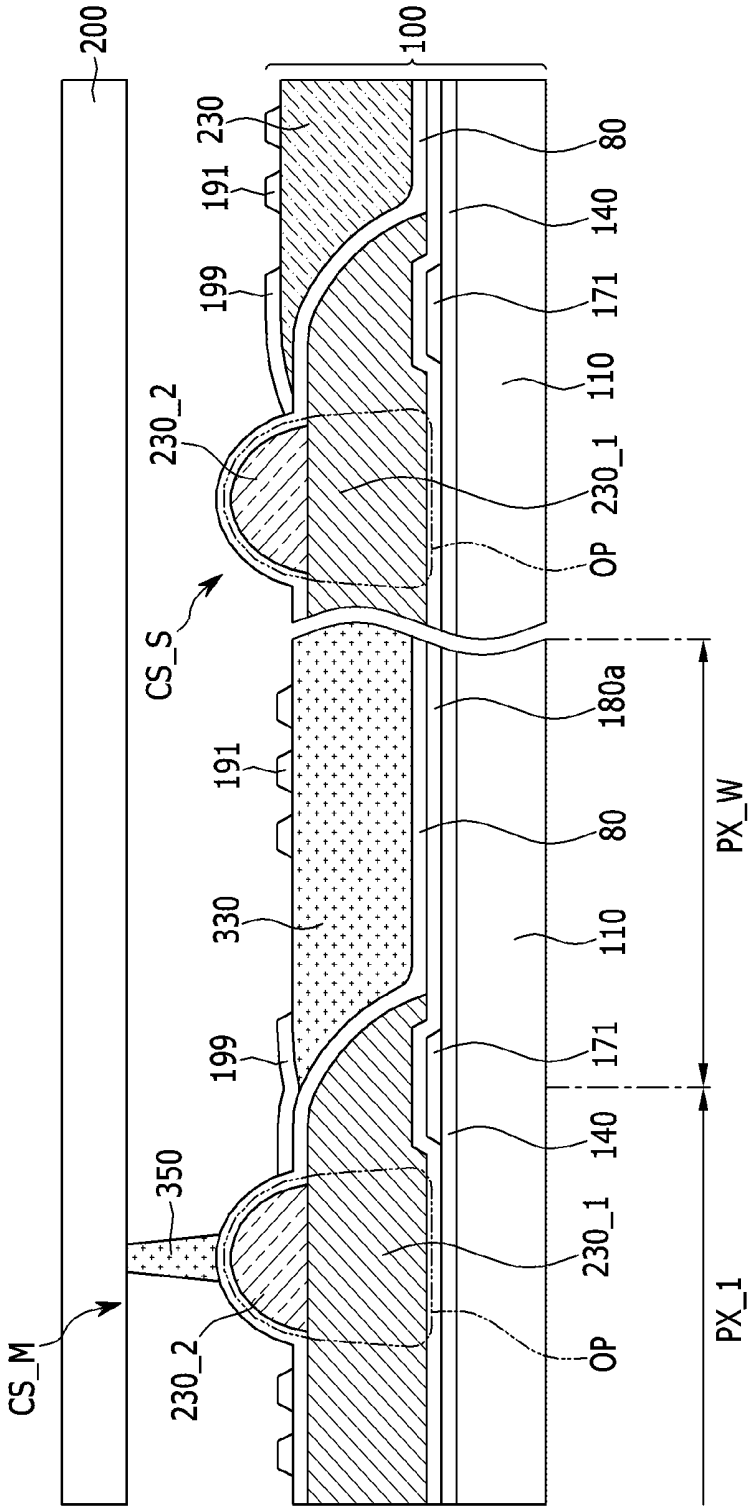
200
100
230
191
199
230_2
CS_S
191
330
199
350
CS_M
230_2
80
140
171
110
230_1
OP
180a
80
110
171
140
230_1
OP
PX_W
PX_1

FIG. 13

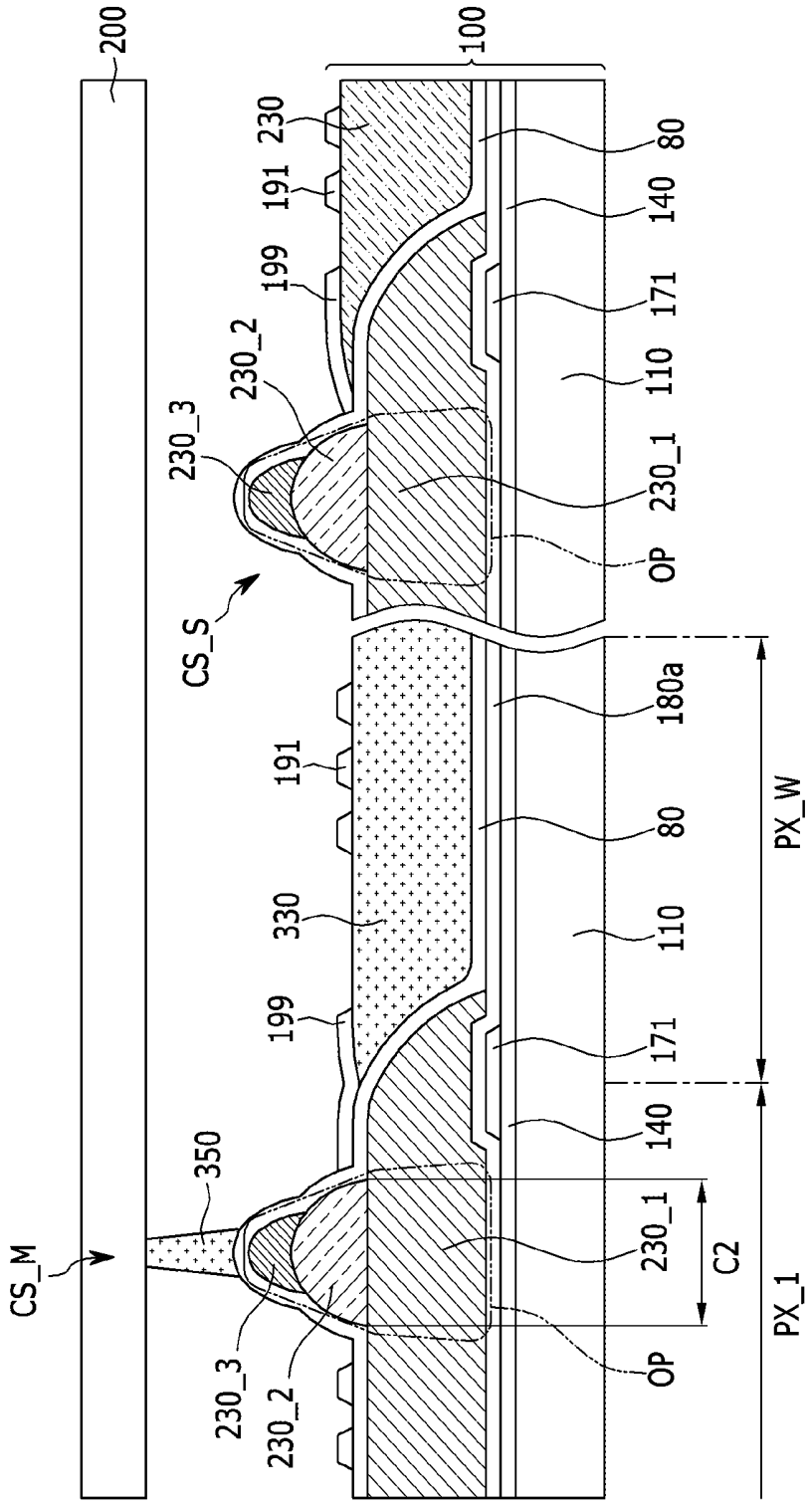
200
100
230
191
199
230_2
230_3
CS_S
80
140
171
110
230_1
OP
180a
PX_W
330
350
CS_M
C2
PX_1

FIG. 14

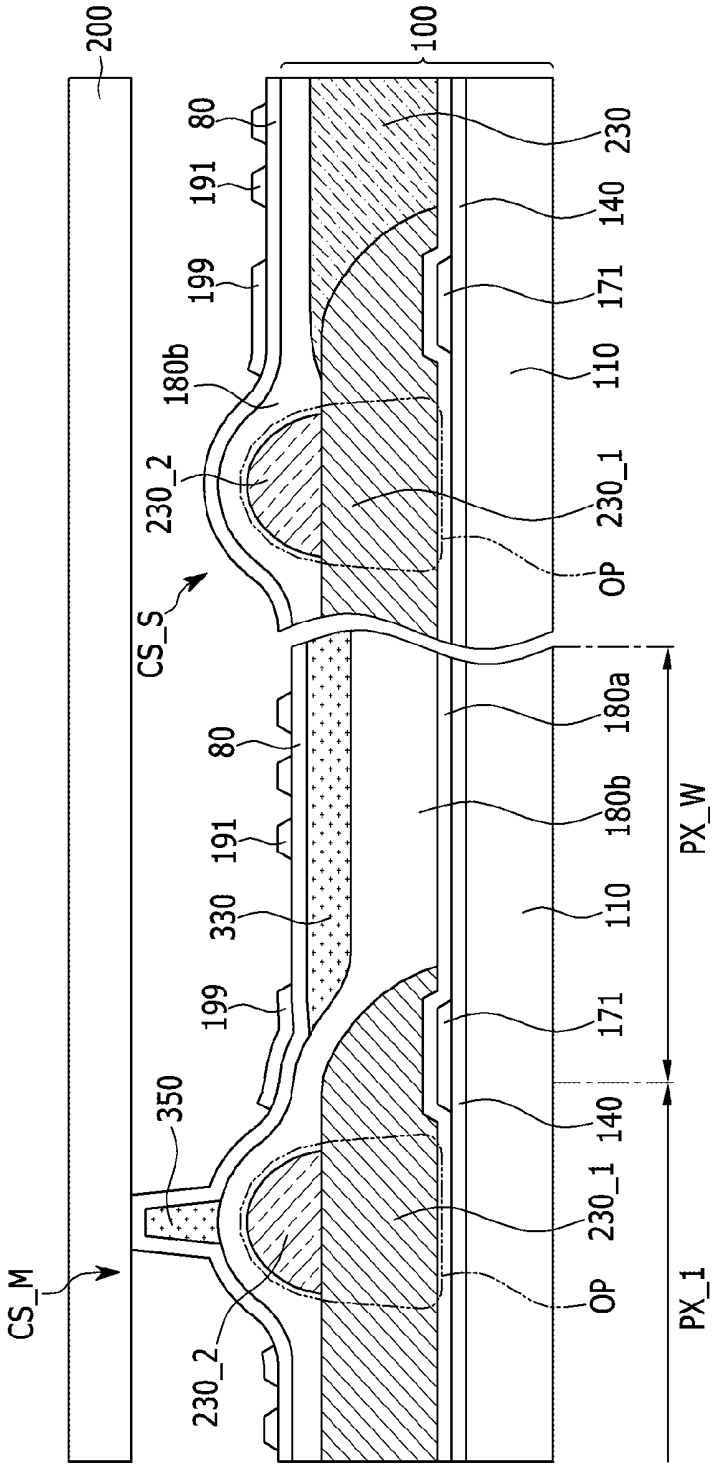
200
100
80
191
199
180b
230_2
CS_S
230
140
171
110
230_1
OP
80
191
330
199
350
CS_M
230_2
180a
180b
110
171
140
230_1
OP
PX_W
PX_1

FIG. 15

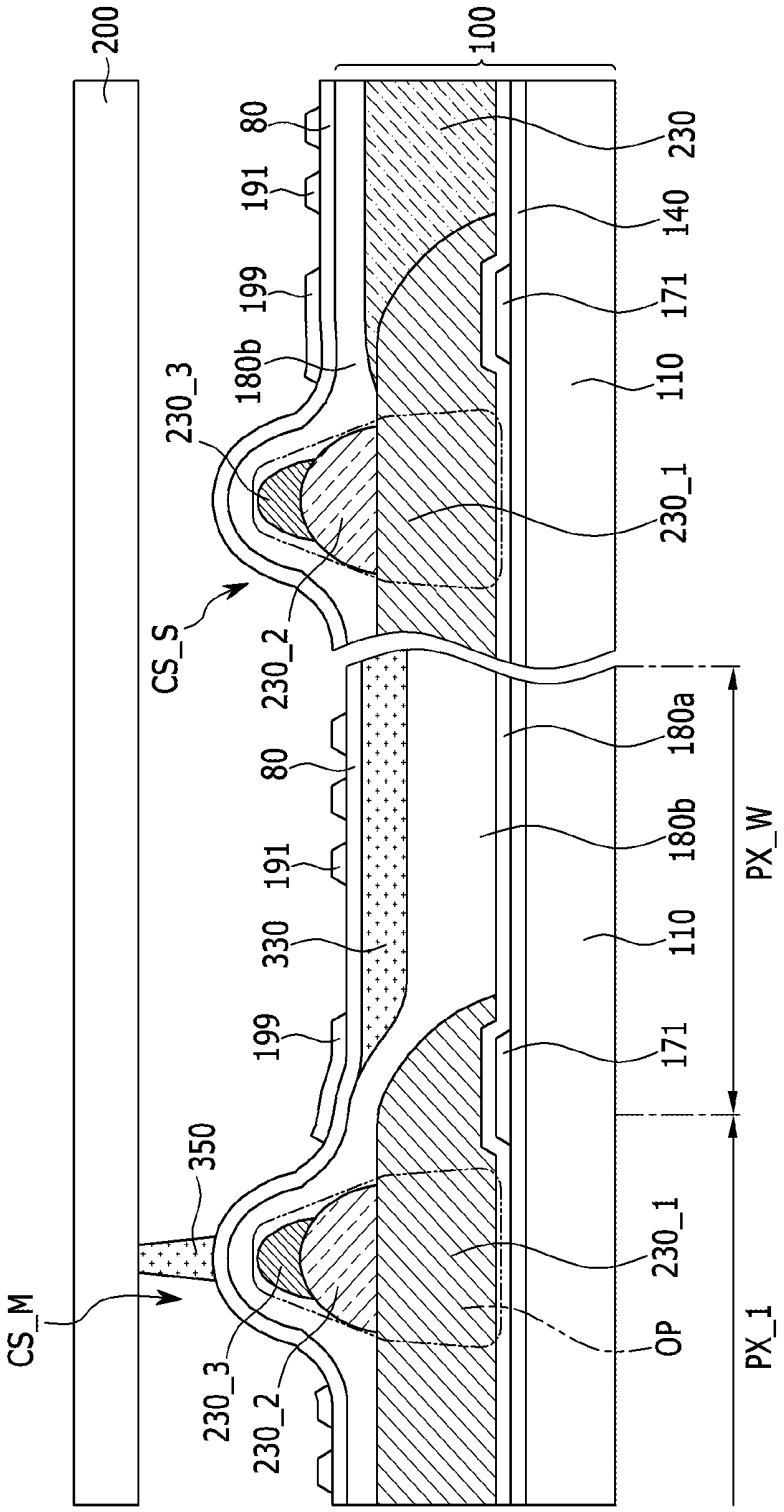
200
100
80
191
199
180b
230_3
CS_S
230_2
230
140
171
110
230_1
80
191
330
199
350
CS_M
230_3
230_2
180a
180b
110
171
230_1
OP
PX_W
PX_1

FIG. 16

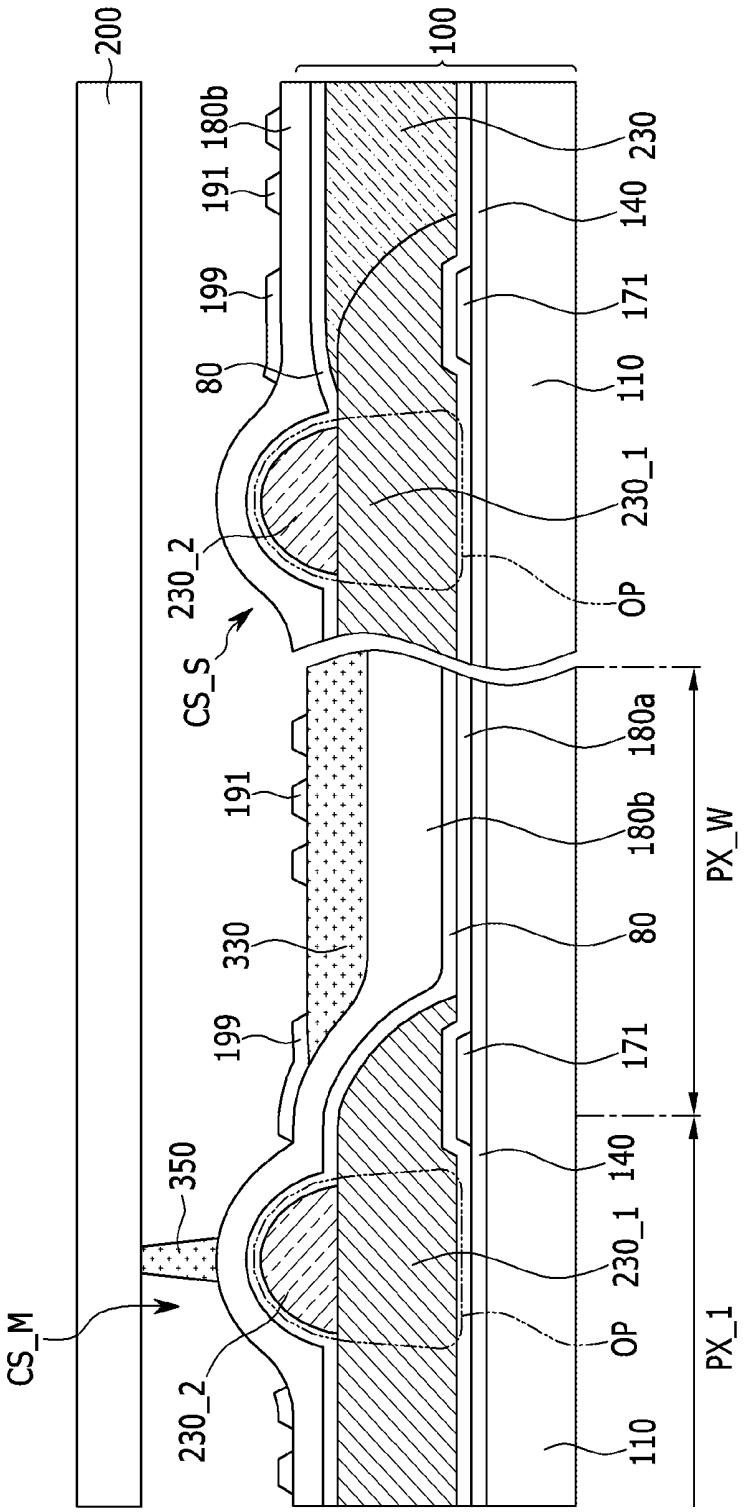
200
100
180b
191
199
80
230_2
CS_S
230
140
171
110
230_1
OP
191
330
199
350
CS_M
230_2
180a
180b
80
171
140
230_1
OP
110
PX_W
PX_1

FIG. 17

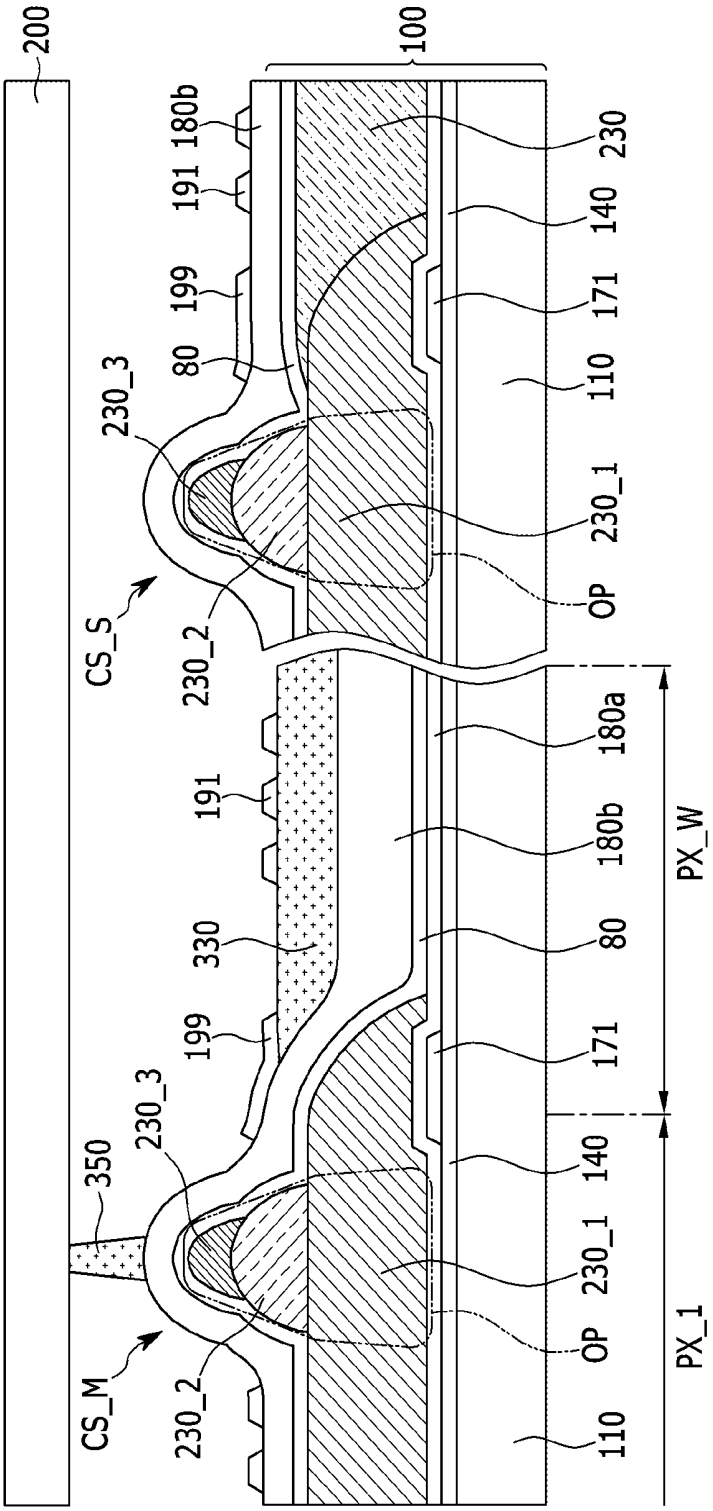
200
100
180b
191
199
80
230_3
CS_S
230_2
230
140
171
110
230_1
OP
180a
191
330
199
350
230_3
CS_M
230_2
180b
80
171
140
230_1
OP
110
PX_W
PX_1

FIG. 18

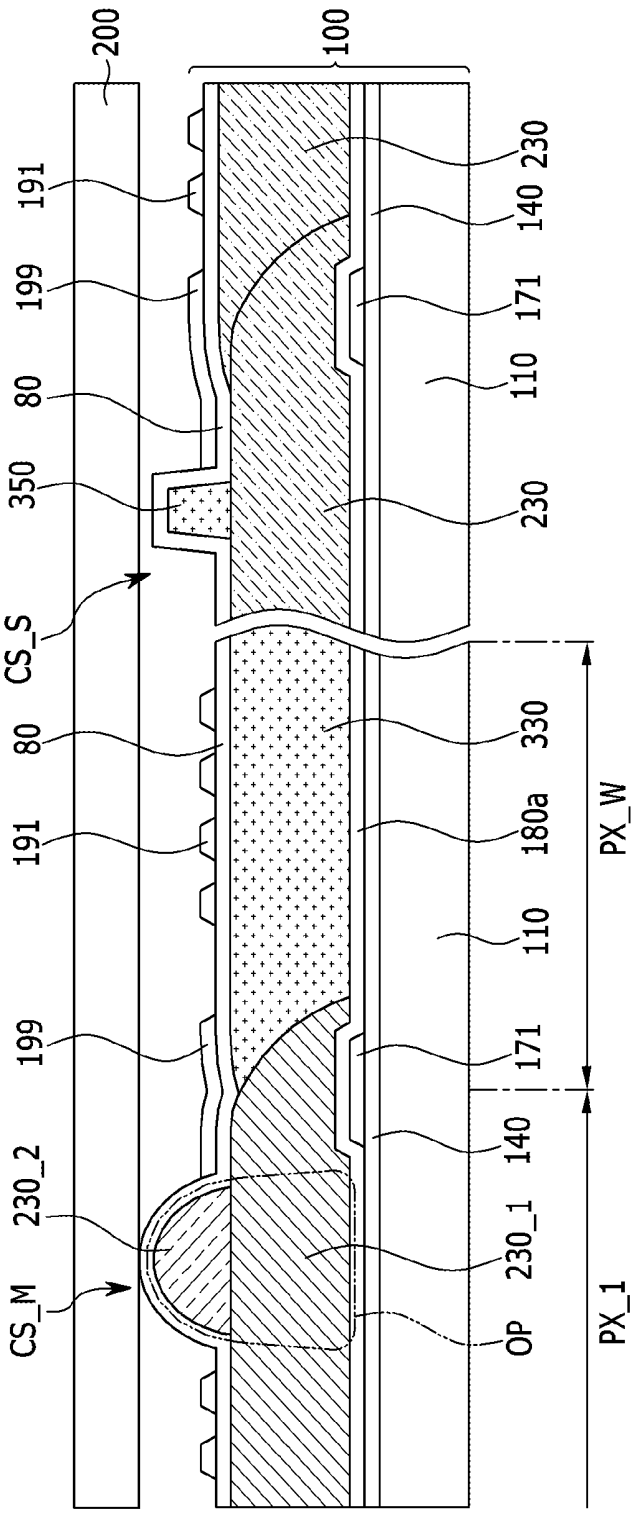
200
191
199
80
350
CS_S
80
191
199
230_2
CS_M
100
230
140
171
110
230
330
180a
110
171
140
230_1
OP
PX_W
PX_1

FIG. 19

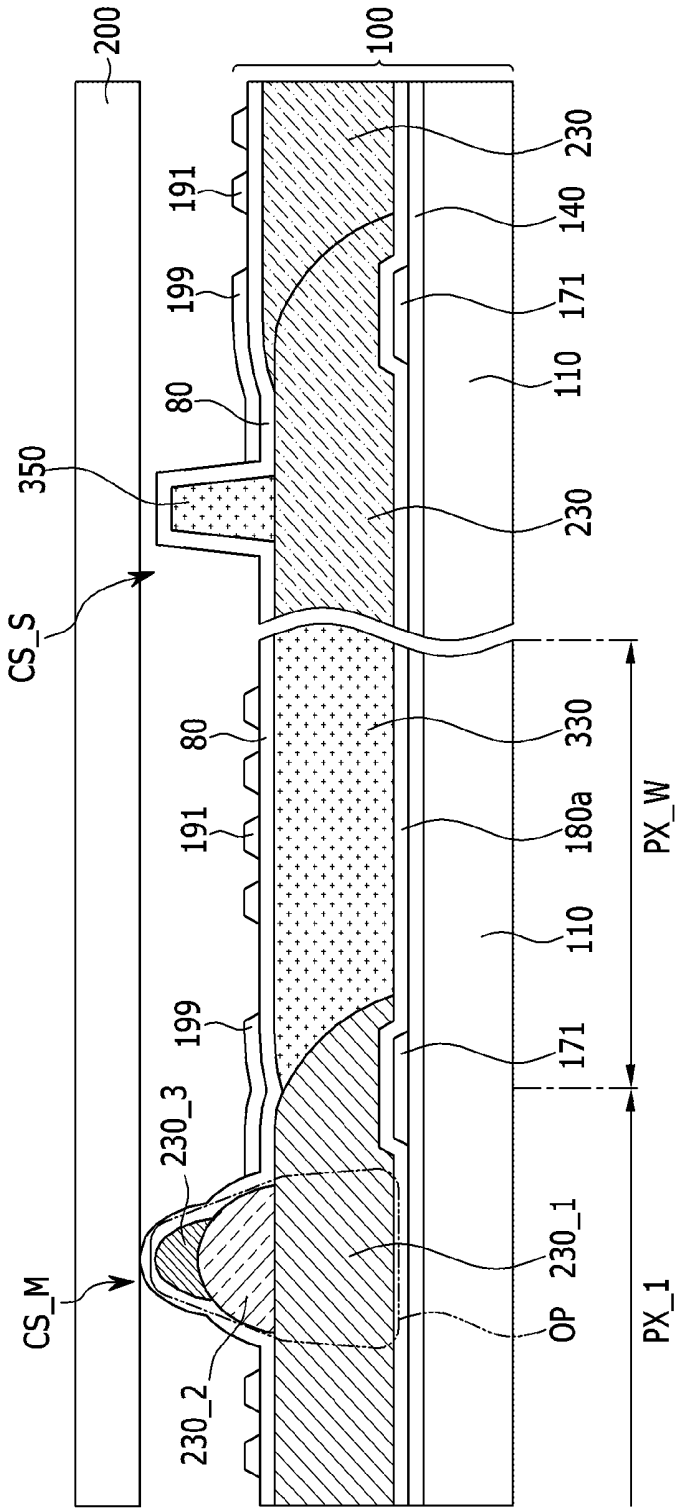
200
100
191
199
80
350
CS_S
230
140
171
110
230
80
191
199
230_3
CS_M
230_2
330
180a
110
171
230_1
OP
PX_W
PX_1

FIG. 20

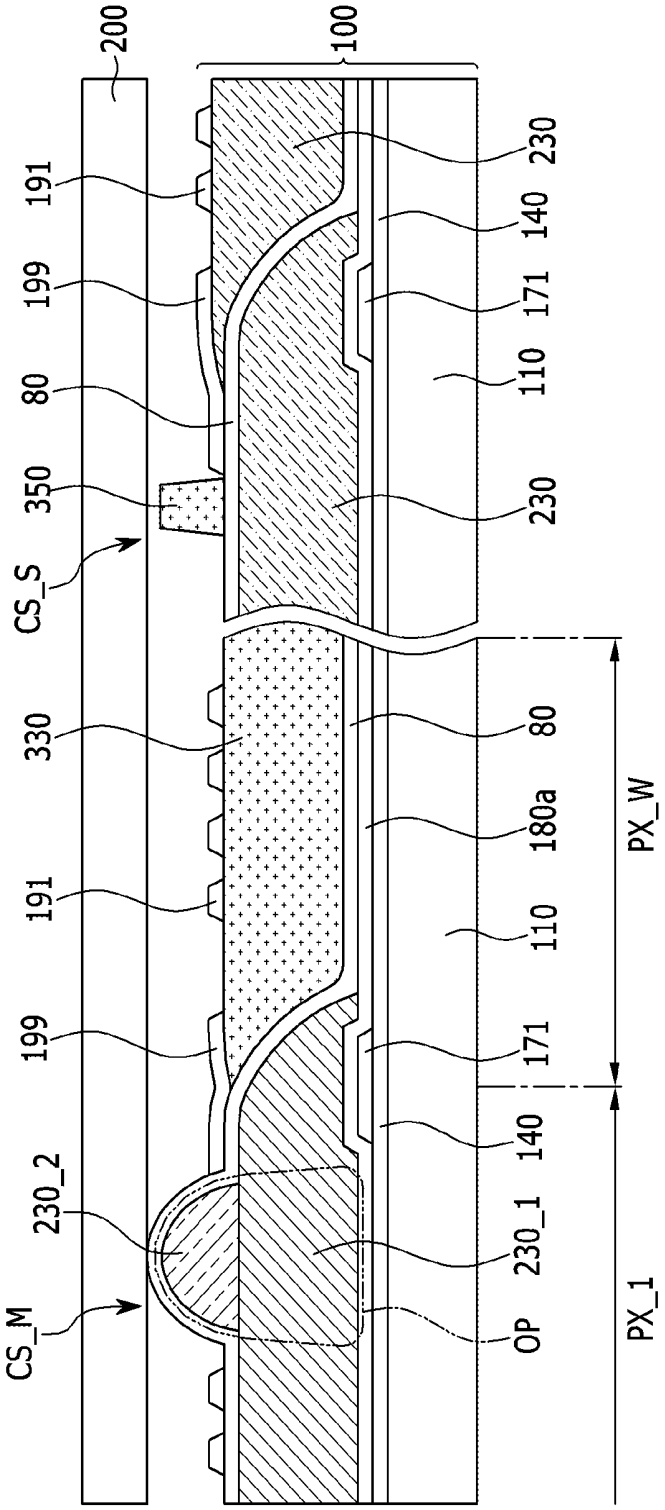
200
100
191
199
80
350
CS_S
330
191
199
230_2
CS_M
230
140
171
110
230
80
180a
110
171
140
230_1
OP
PX_W
PX_1

FIG. 21

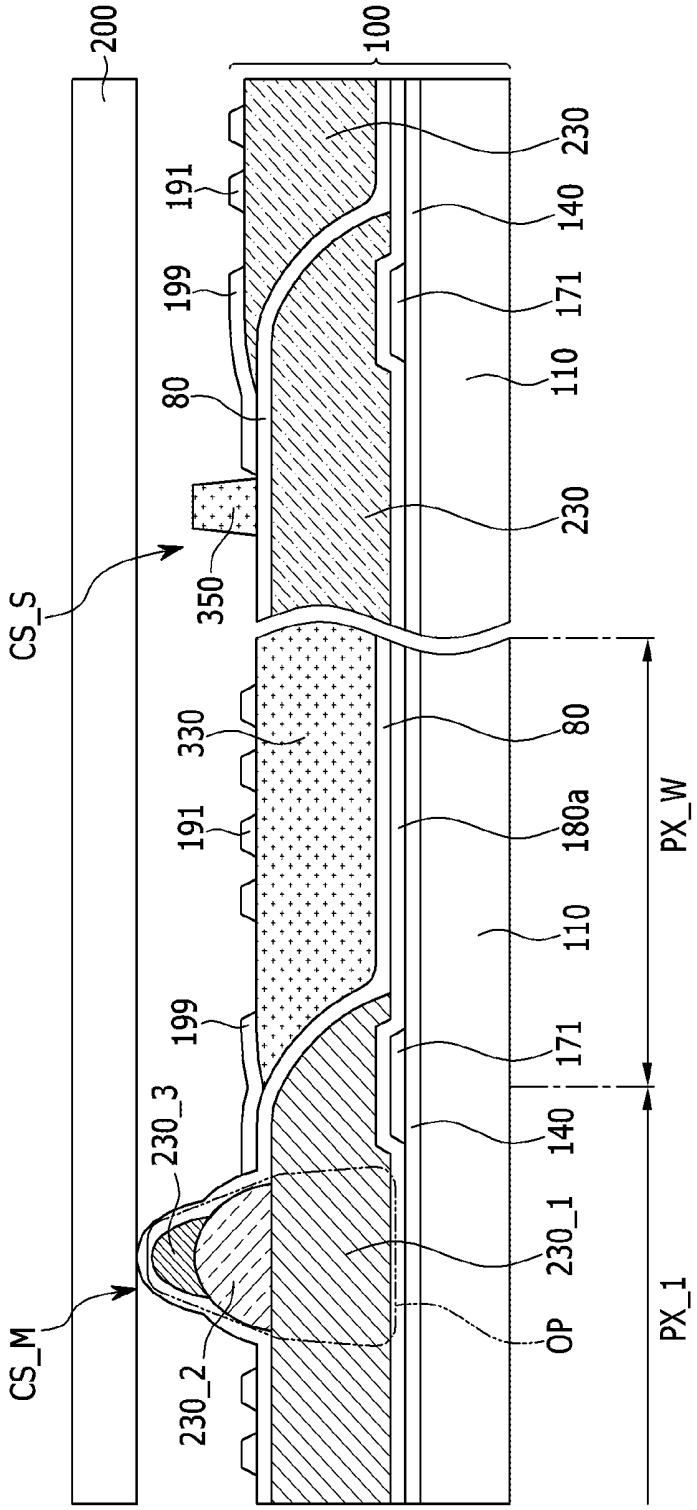
200
100
CS_S
CS_M
191
199
80
350
330
191
199
230_3
230_2
230
140
171
110
230
80
180a
110
171
140
230_1
OP
PX_W
PX_1

FIG. 22

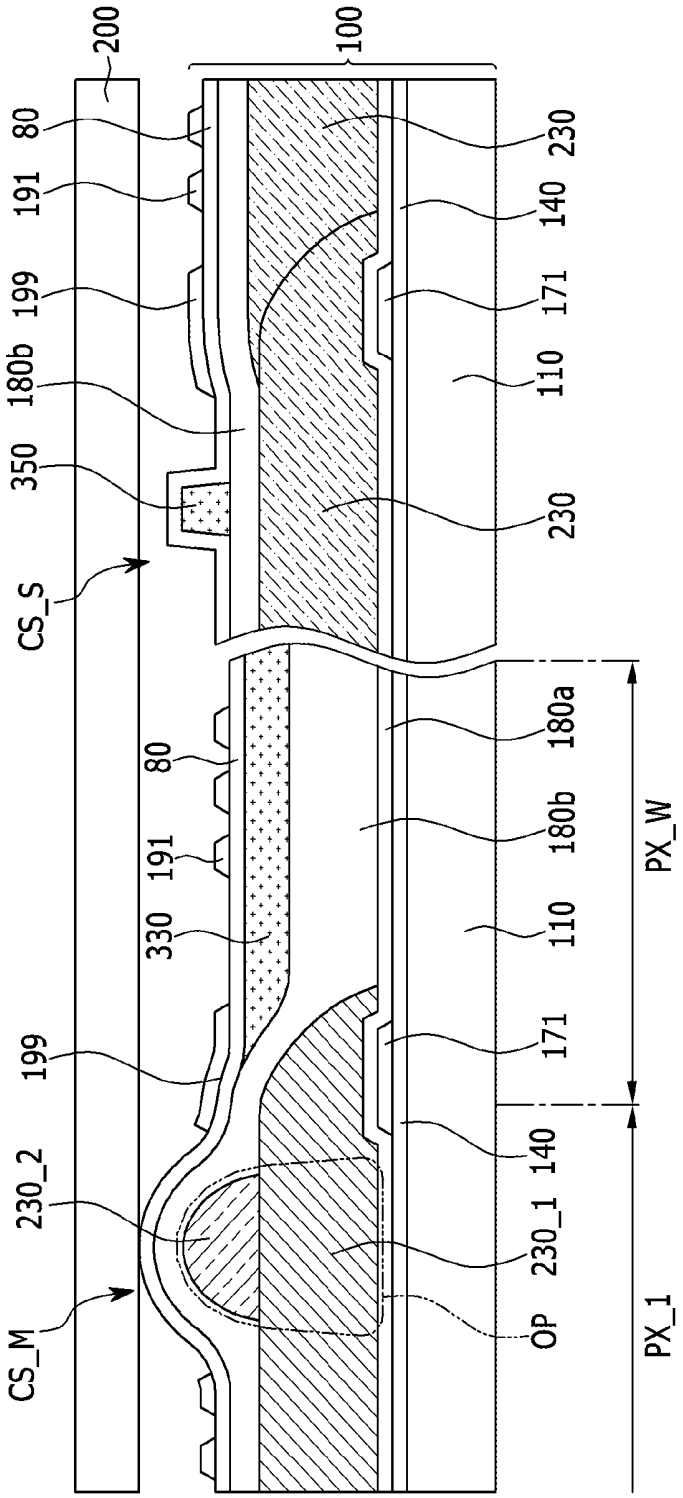
200
100
80
191
199
180b
350
CS_S
80
191
330
199
230_2
CS_M
230
140
171
110
230
180a
180b
110
171
140
230_1
OP
PX_W
PX_1

FIG. 23

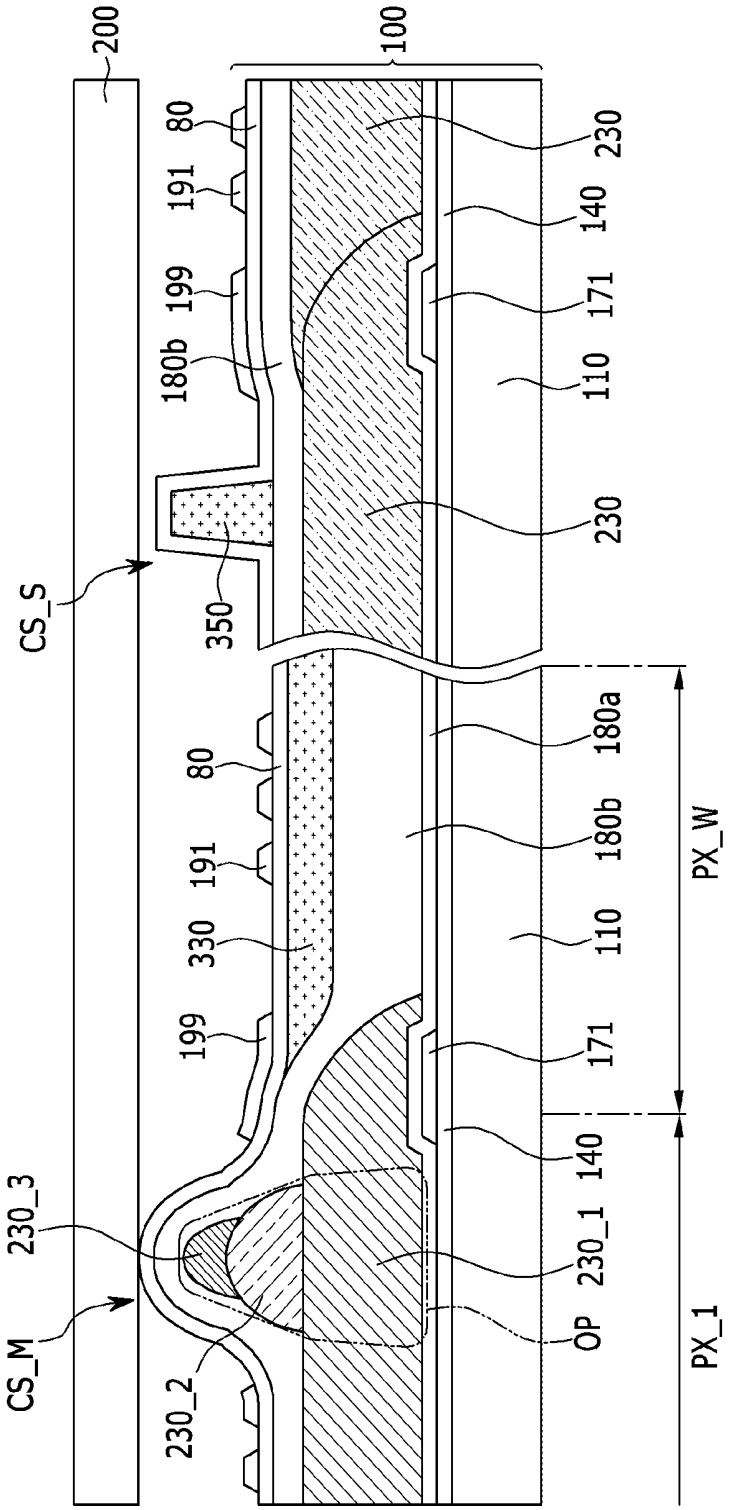
200
100
80
191
199
180b
350
CS_S
80
191
330
199
230_3
CS_M
230_2
230
140
171
110
230
180a
180b
110
171
140
230_1
OP
PX_W
PX_1

FIG. 24

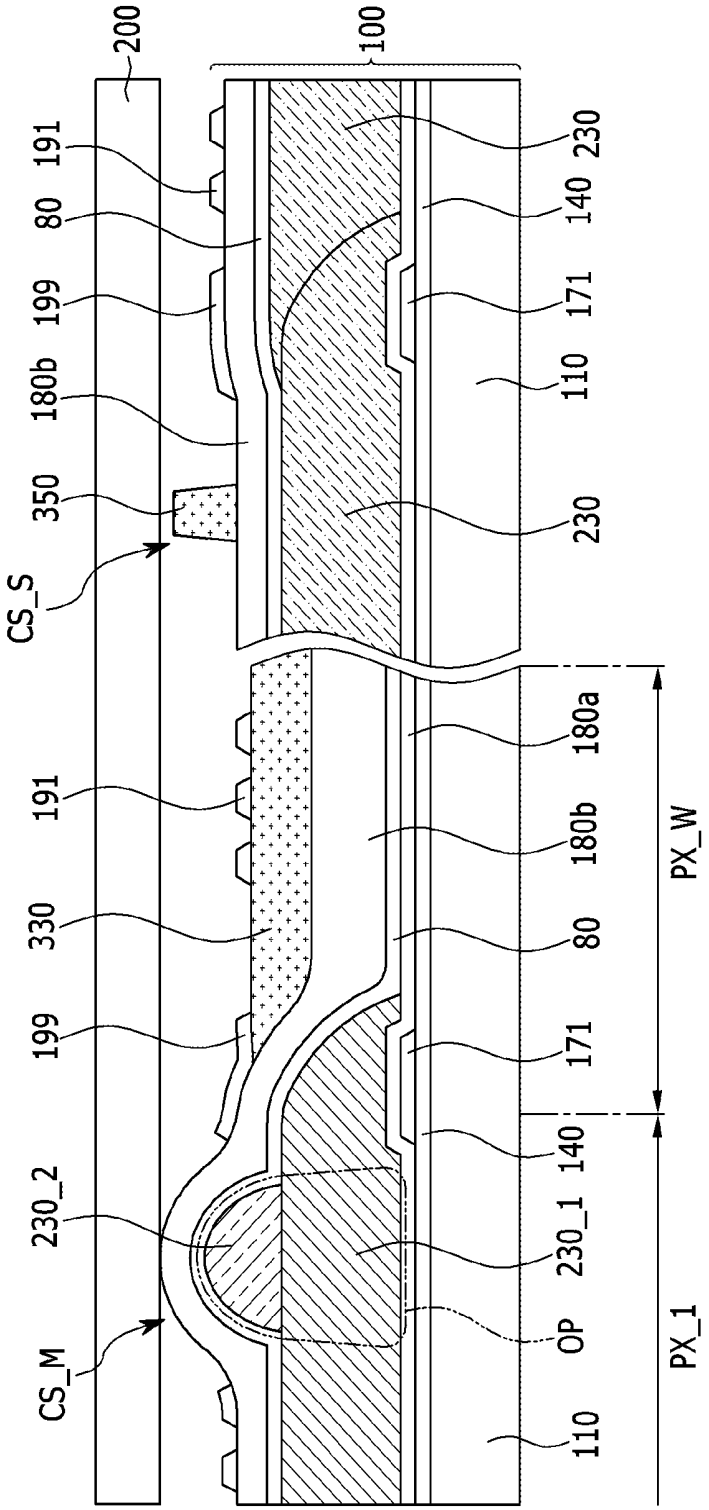
200
100
191
80
199
180b
350
CS_S
191
330
199
230_2
CS_M
230
140
171
110
230
180a
180b
80
171
140
230_1
OP
110
PX_W
PX_1

FIG. 25

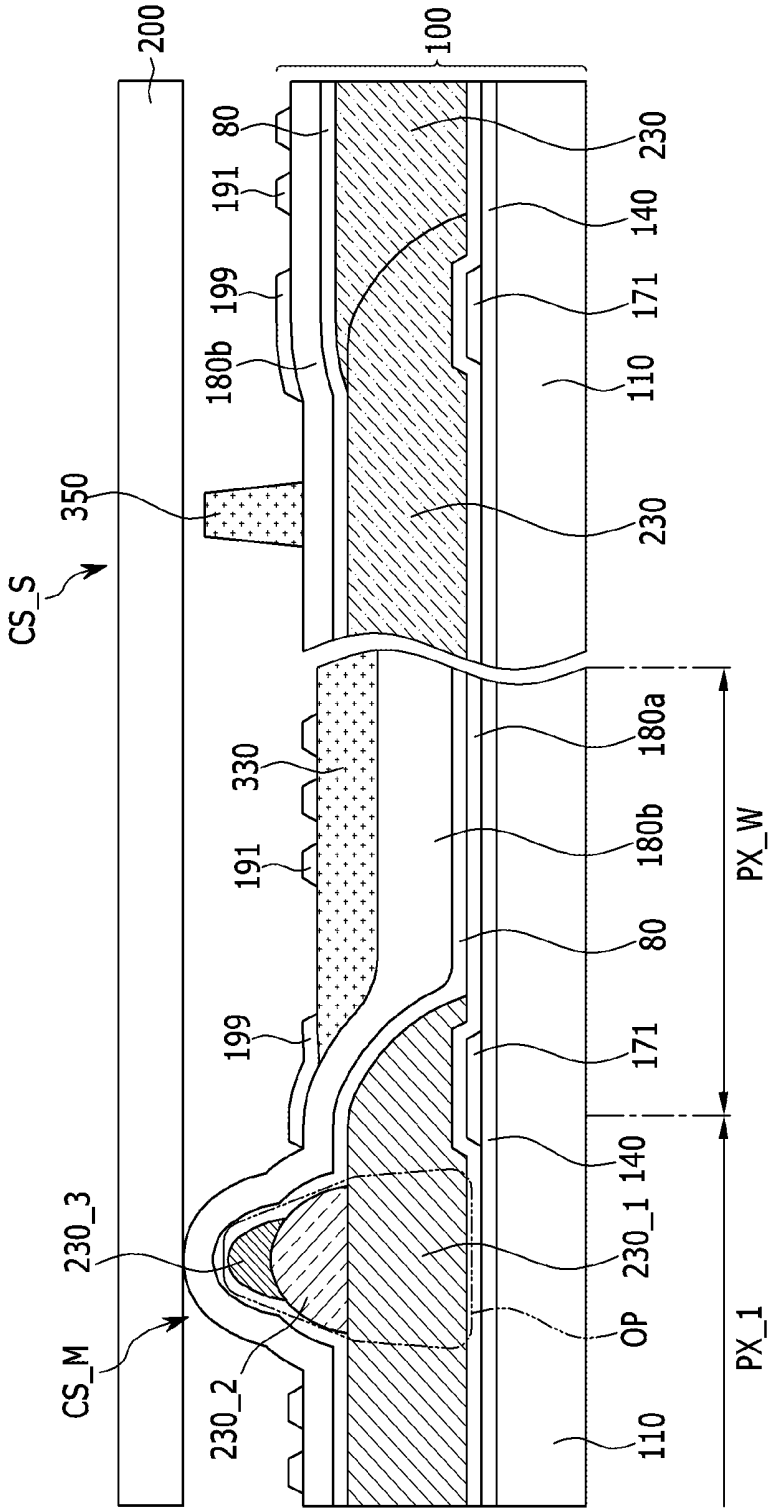
200
100
80
191
199
180b
350
CS_S
330
191
199
230_3
CS_M
230_2
230
140
171
110
230
180a
180b
80
171
140
230_1
OP
110
PX_W
PX_1

FIG. 26

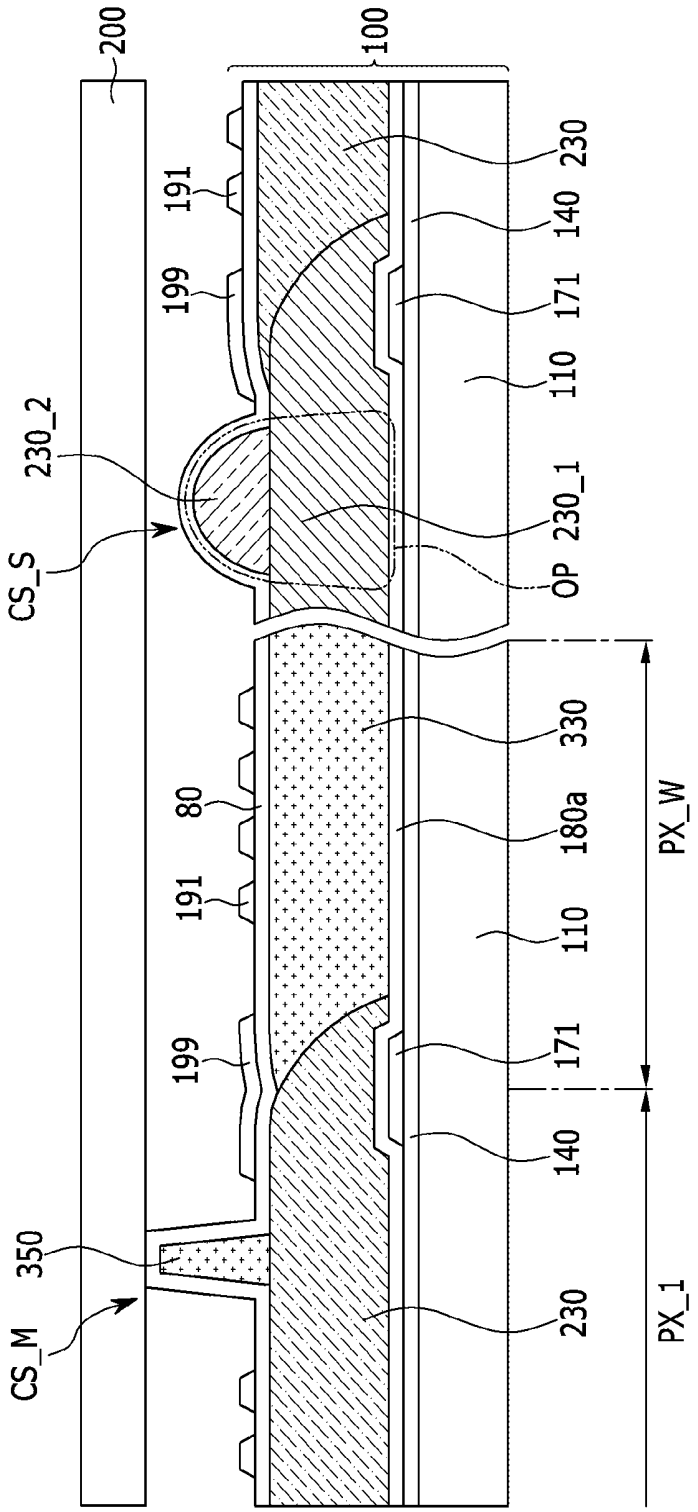
200
100
191
199
230_2
CS_S
230
140
171
110
230_1
OP
330
80
180a
191
110
199
171
140
350
CS_M
230
PX_W
PX_1

FIG. 27

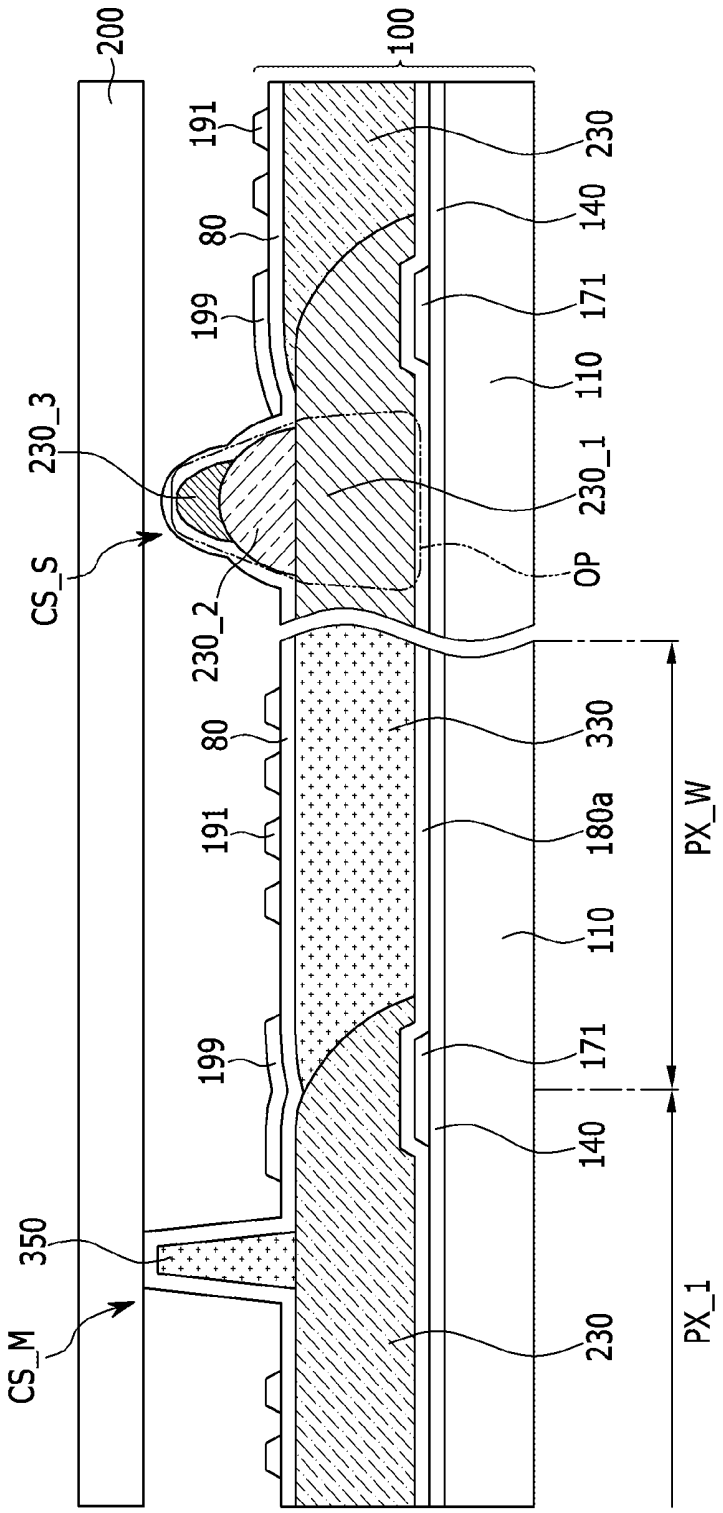
200
100
191
80
199
230_3
CS_S
230_2
80
191
199
350
CS_M
230
140
171
110
230_1
OP
330
180a
110
171
140
230
PX_W
PX_1

FIG. 28

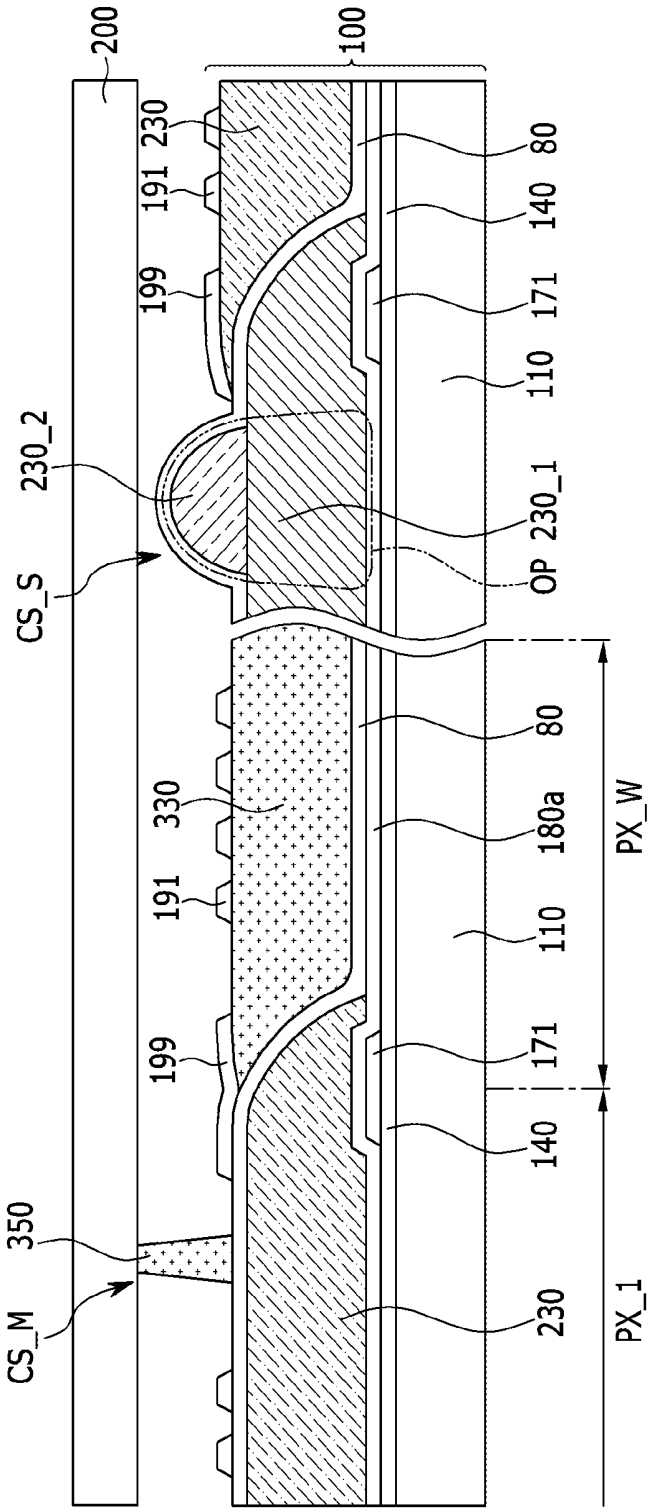
200
100
230
191
199
80
140
171
110
230_2
230_1
CS_S
OP
330
180a
PX_W
350
CS_M
PX_1

FIG. 29

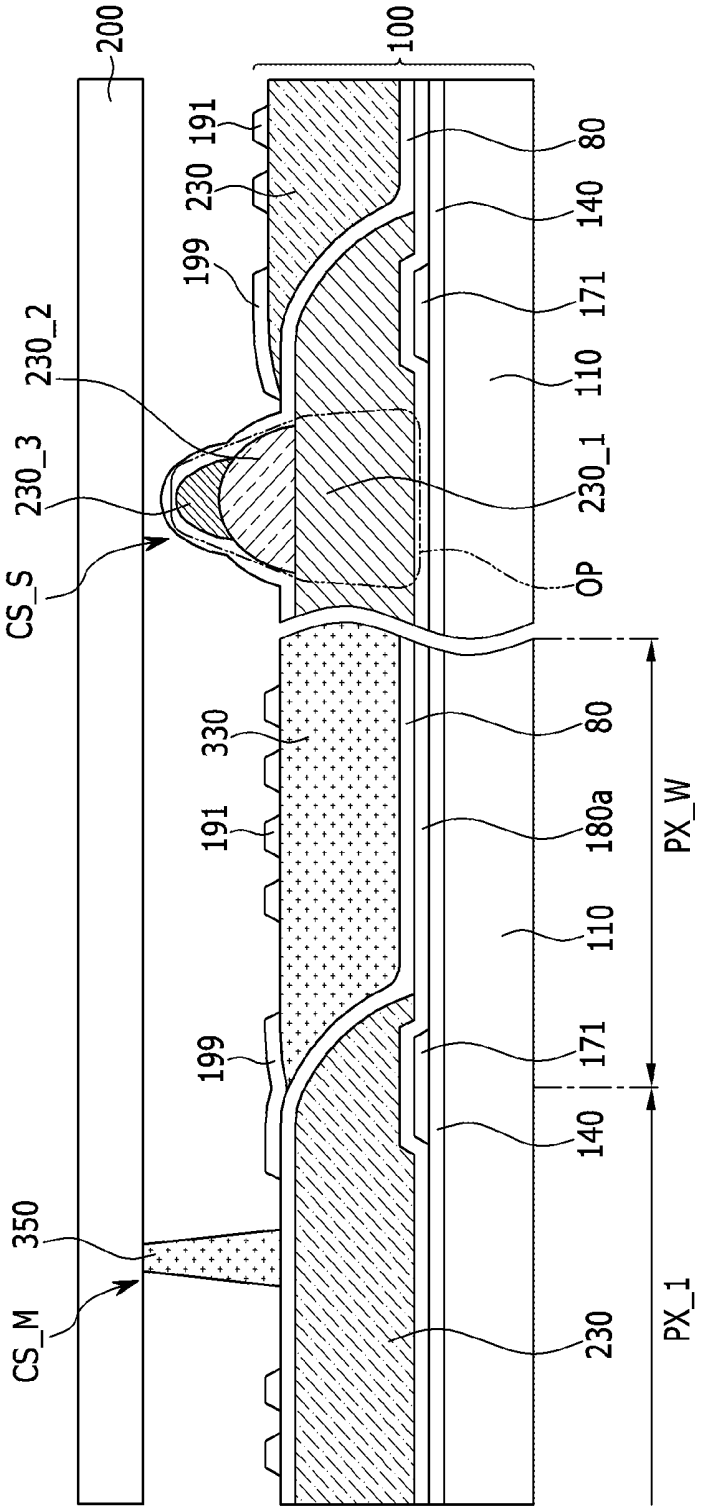
200
100
191
230
199
230_2
230_3
CS_S
80
140
171
110
230_1
OP
330
191
199
350
CS_M
80
180a
110
171
140
230
PX_W
PX_1

FIG. 30

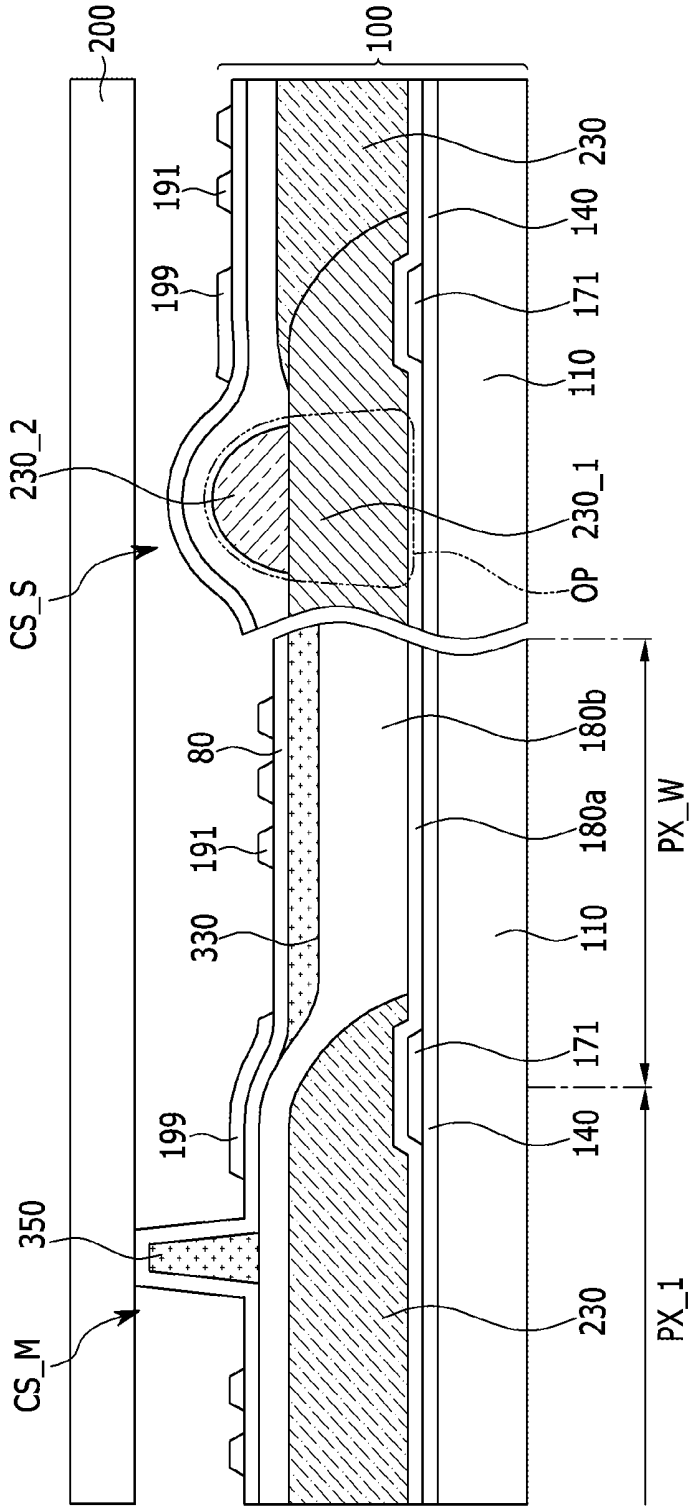
200
100
191
199
230_2
CS_S
80
191
330
199
350
CS_M
230
140
171
110
230_1
OP
180b
180a
110
171
140
230
PX_W
PX_1

FIG. 31

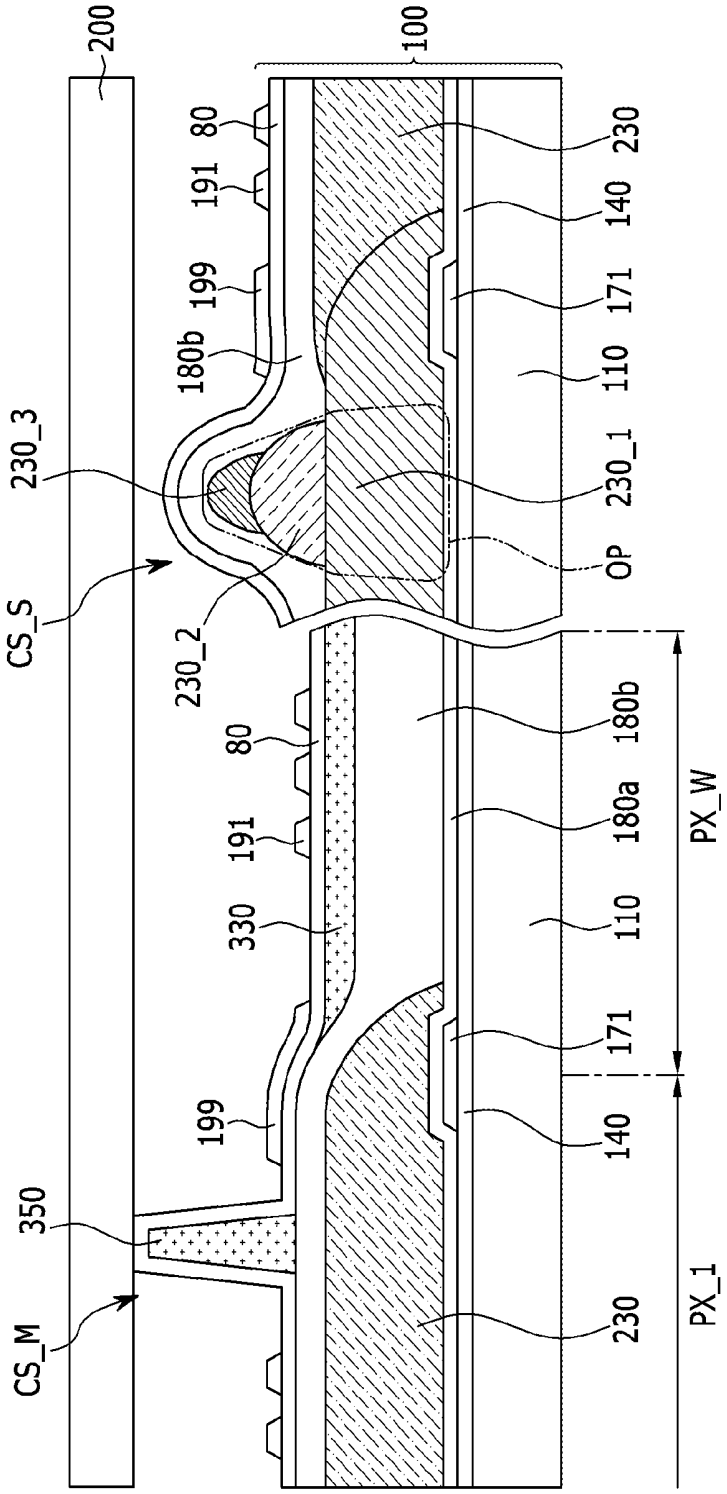
200
100
80
191
199
180b
230_3
CS_S
230_2
80
191
330
199
350
CS_M
230
140
171
110
230_1
OP
180b
180a
110
171
140
230
PX_W
PX_1

FIG. 32

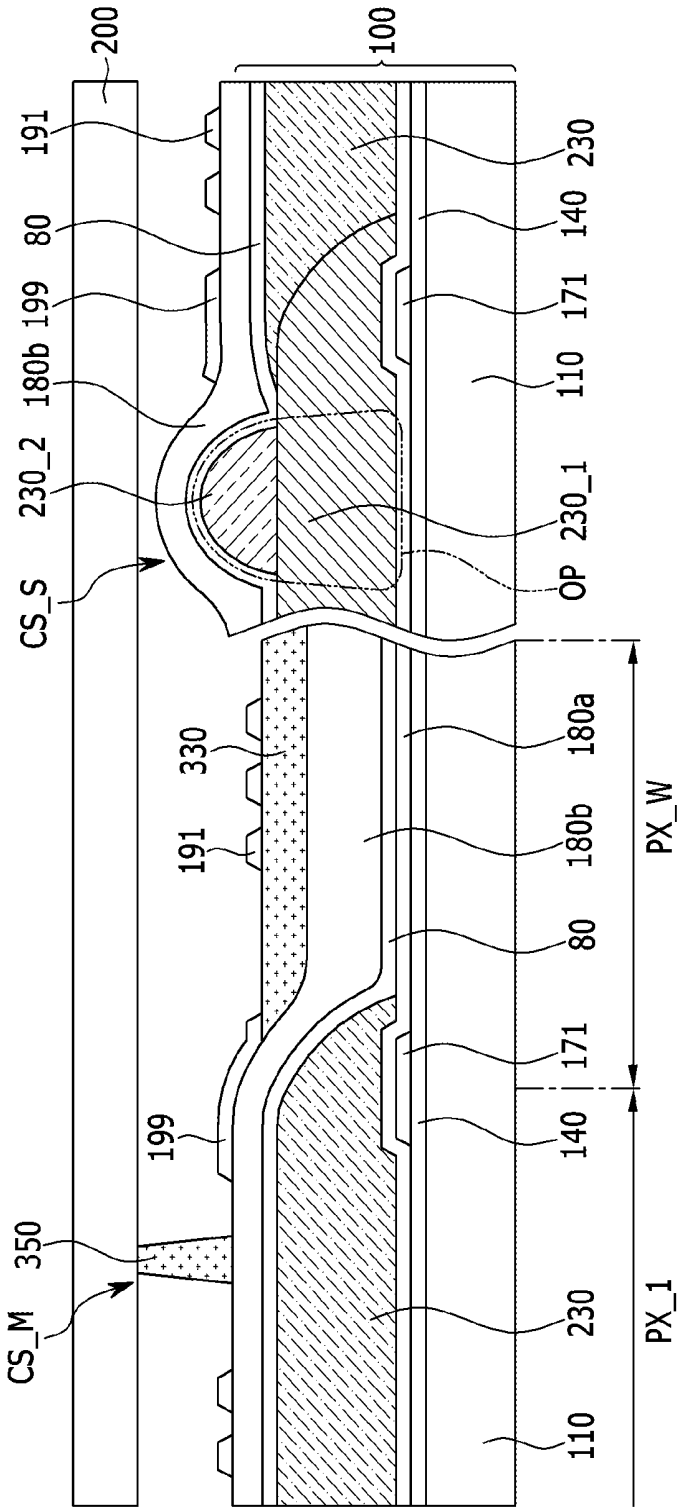
200
100
191
80
199
180b
230_2
CS_S
330
191
199
350
CS_M
230
140
171
110
230_1
OP
180a
180b
80
171
140
230
110
PX_W
PX_1

FIG. 33

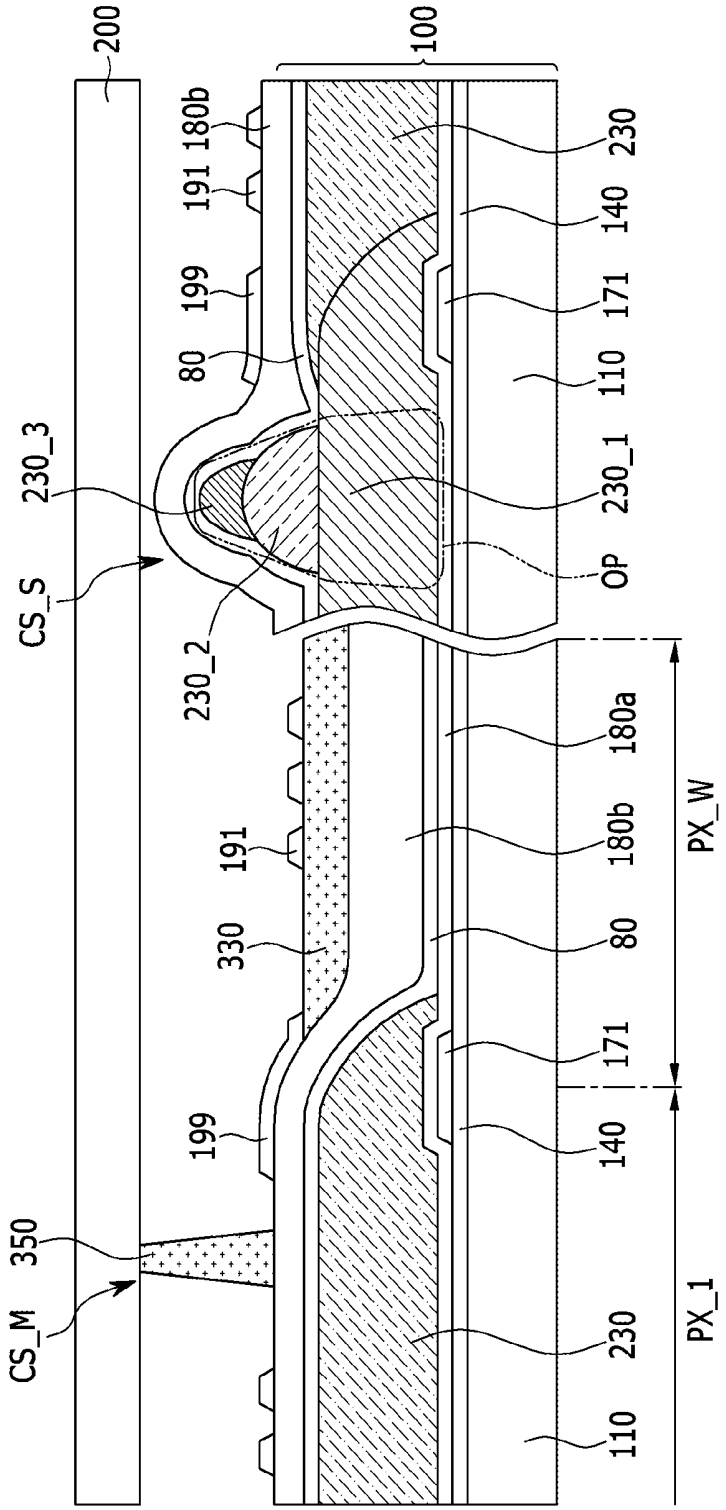
200
100
180b
191
199
80
230_3
CS_S
230_2
230
140
171
110
230_1
OP
180a
180b
80
171
140
230
110
PX_W
PX_1
191
330
199
350
CS_M

FIG. 34A

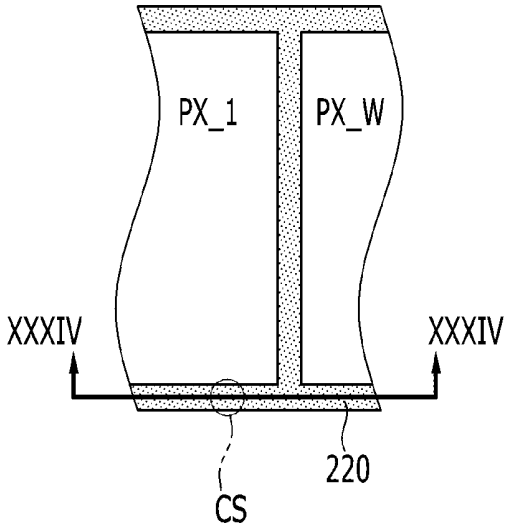

FIG. 34B

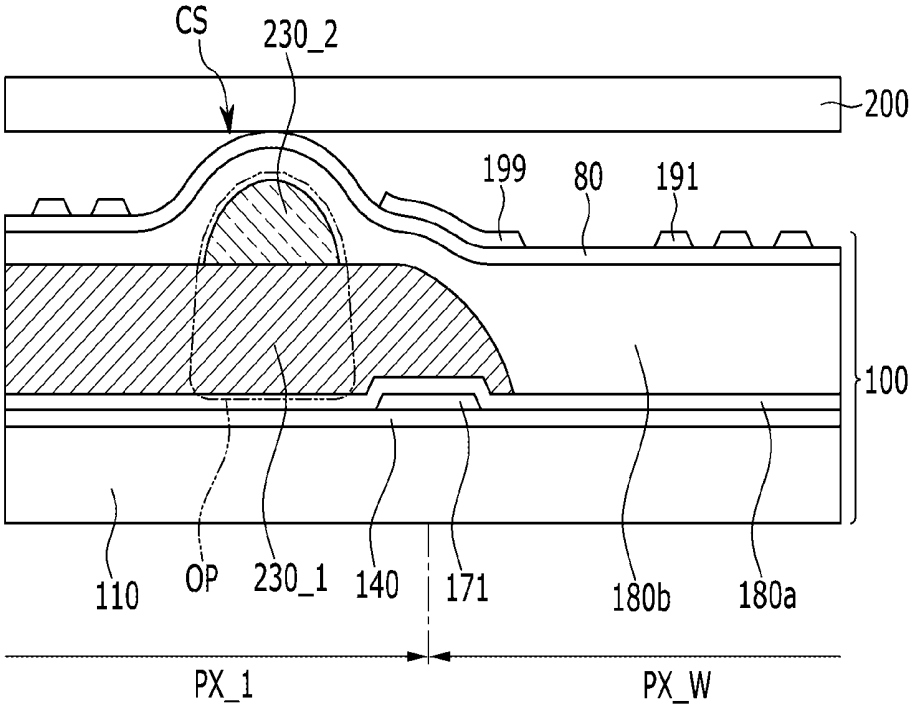

FIG. 35

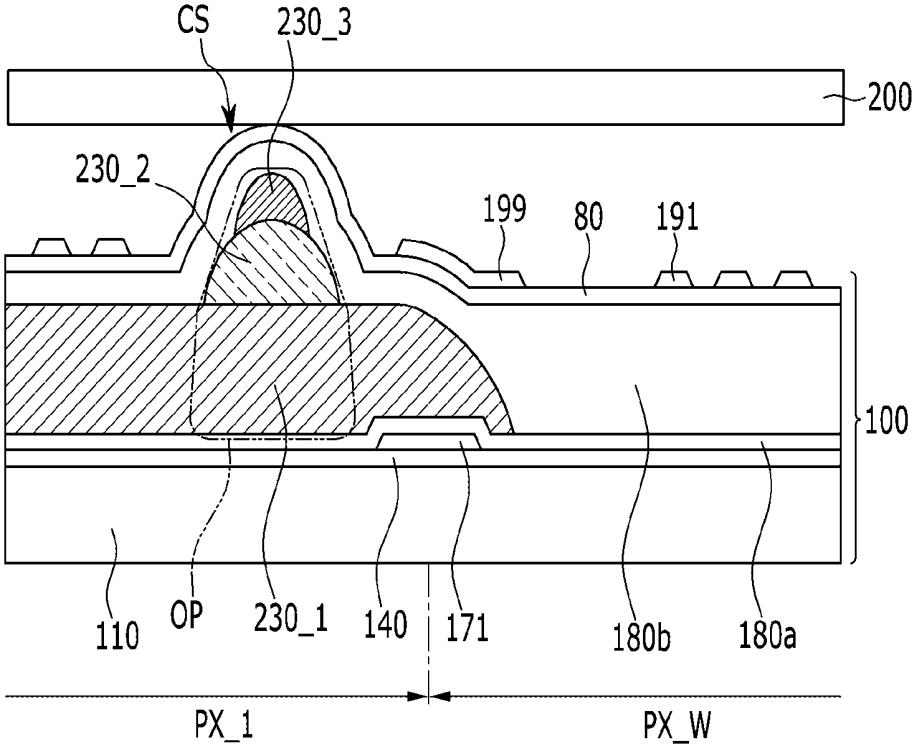
CS
230_3
200
230_2
199
80
191
100
110
OP
230_1
140
171
180b
180a
PX_1
PX_W

FIG. 36

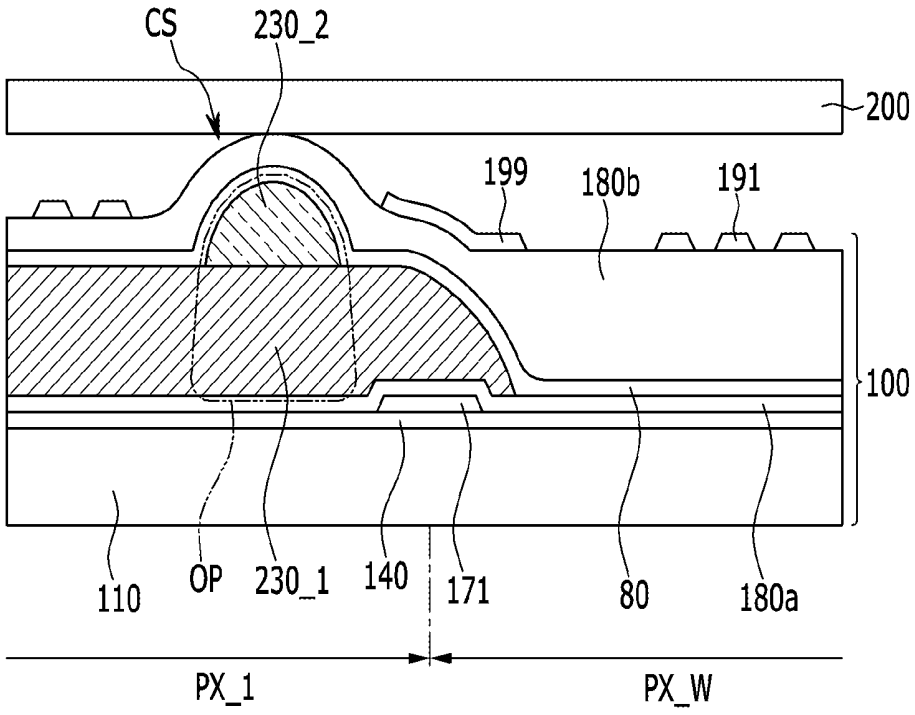

FIG. 37

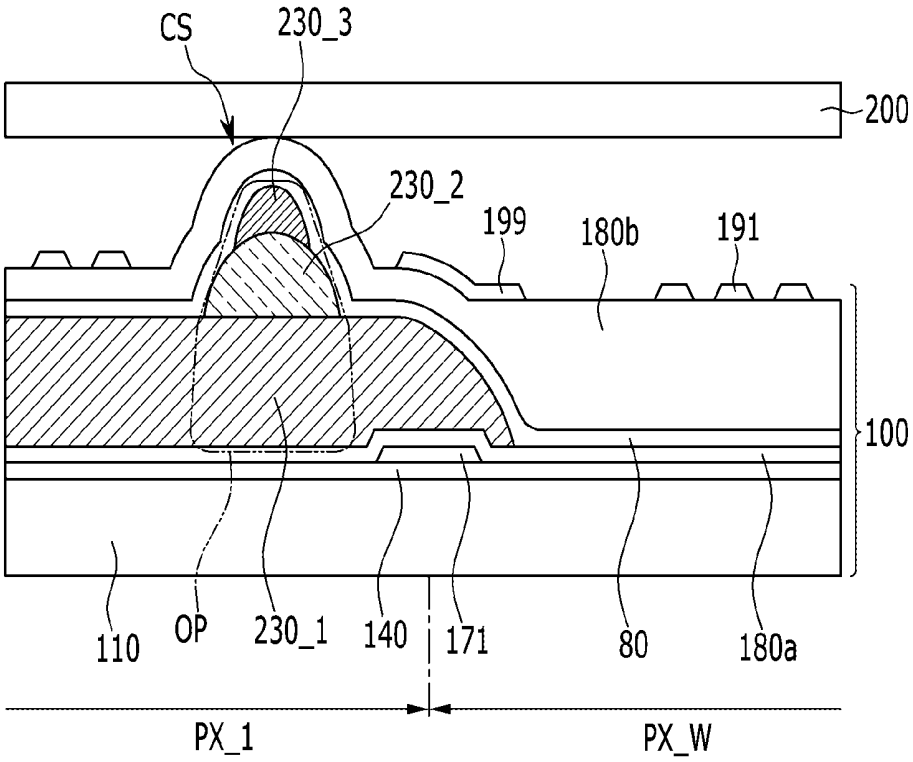
CS
230_3
200
230_2
199
180b
191
100
110
OP
230_1
140
171
80
180a
PX_1
PX_W

FIG. 38

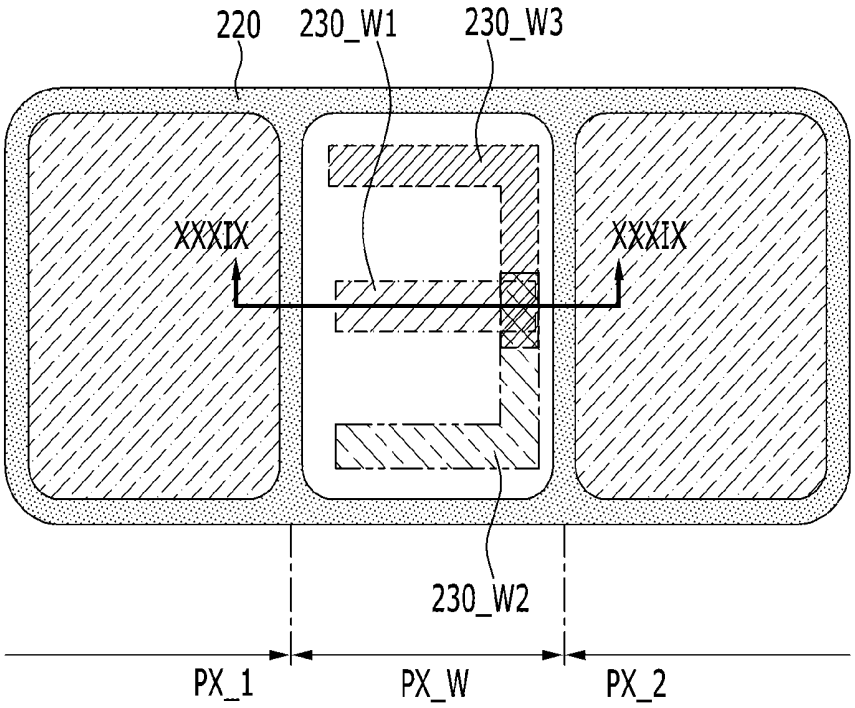

FIG. 39

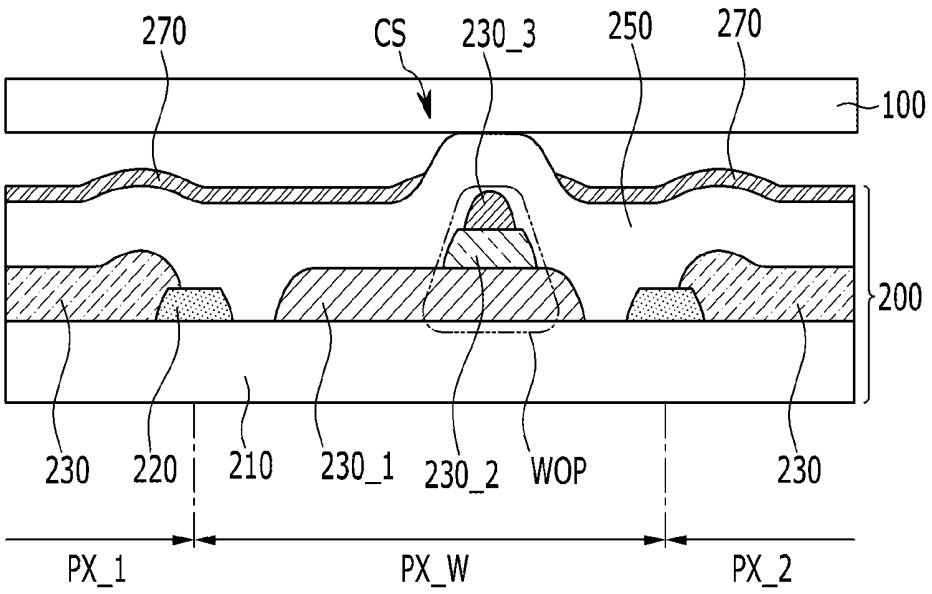
270
CS
230_3
250
270
100
200
230
220
210
230_1
230_2
WOP
230
PX_1
PX_W
PX_2

FIG. 40

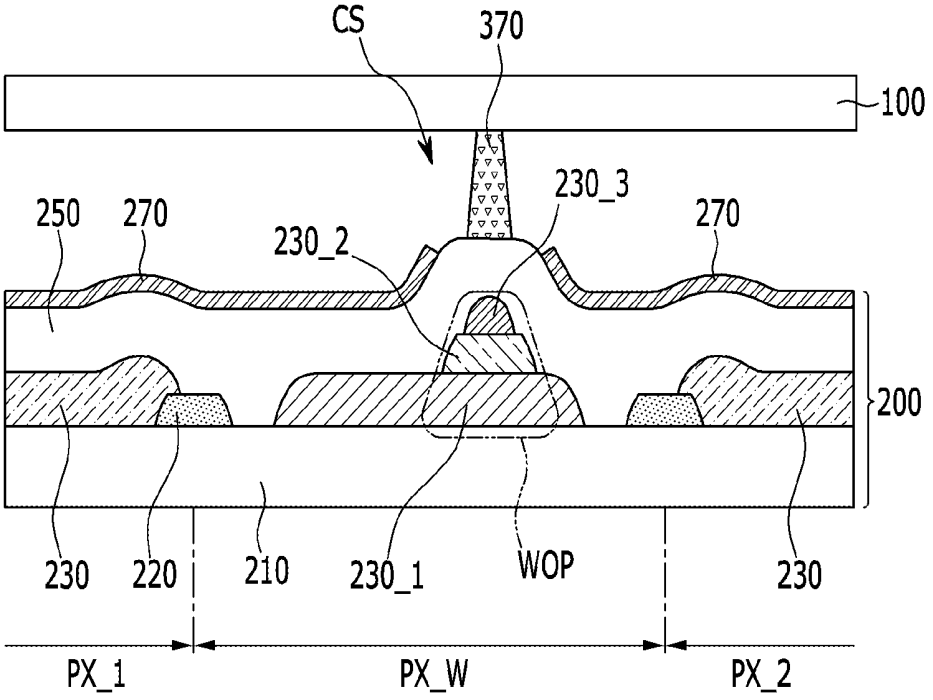
CS
370
100
250
270
230_2
230_3
270
200
230
220
210
230_1
WOP
230
PX_1
PX_W
PX_2

FIG. 41

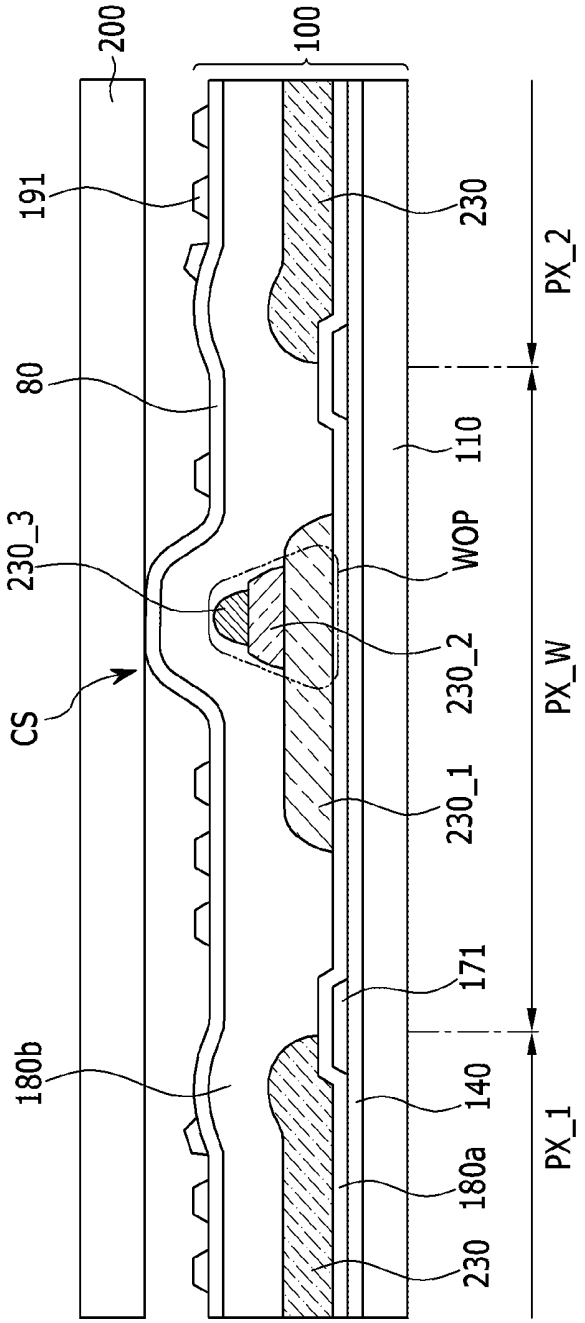
200
100
191
80
230_3
CS
180b
230
110
WOP
230_2
230_1
171
140
180a
230
PX_2
PX_W
PX_1

FIG. 42

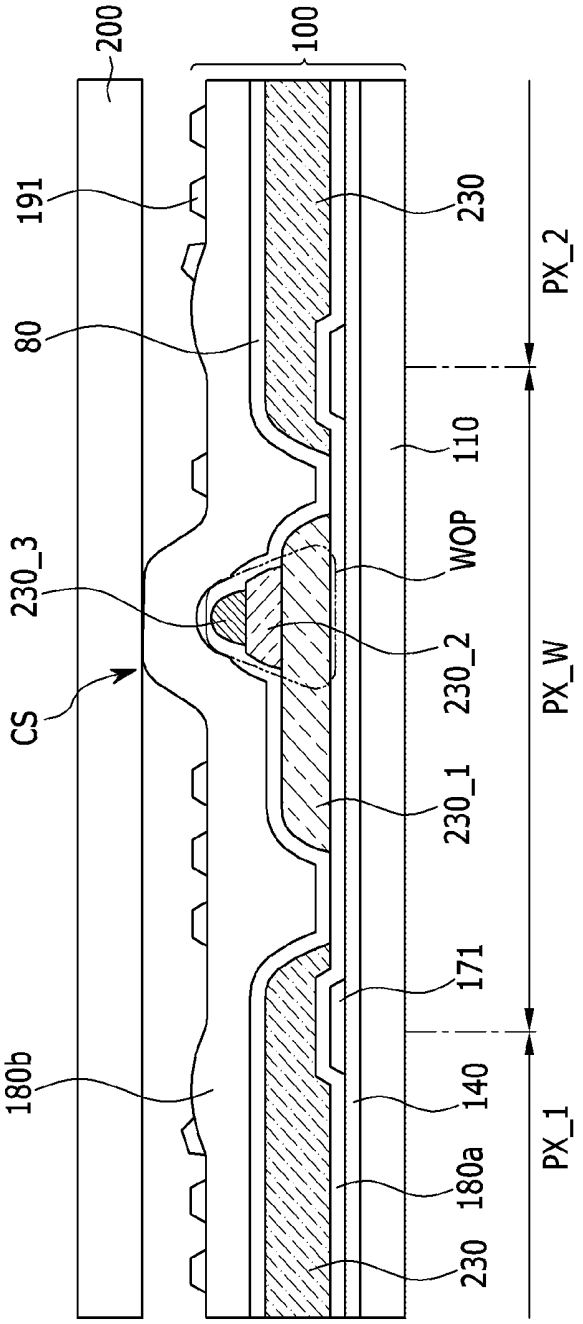
200
100
191
80
230_3
CS
180b
230
PX_2
110
WOP
230_2
PX_W
230_1
171
140
180a
230
PX_1

FIG. 43

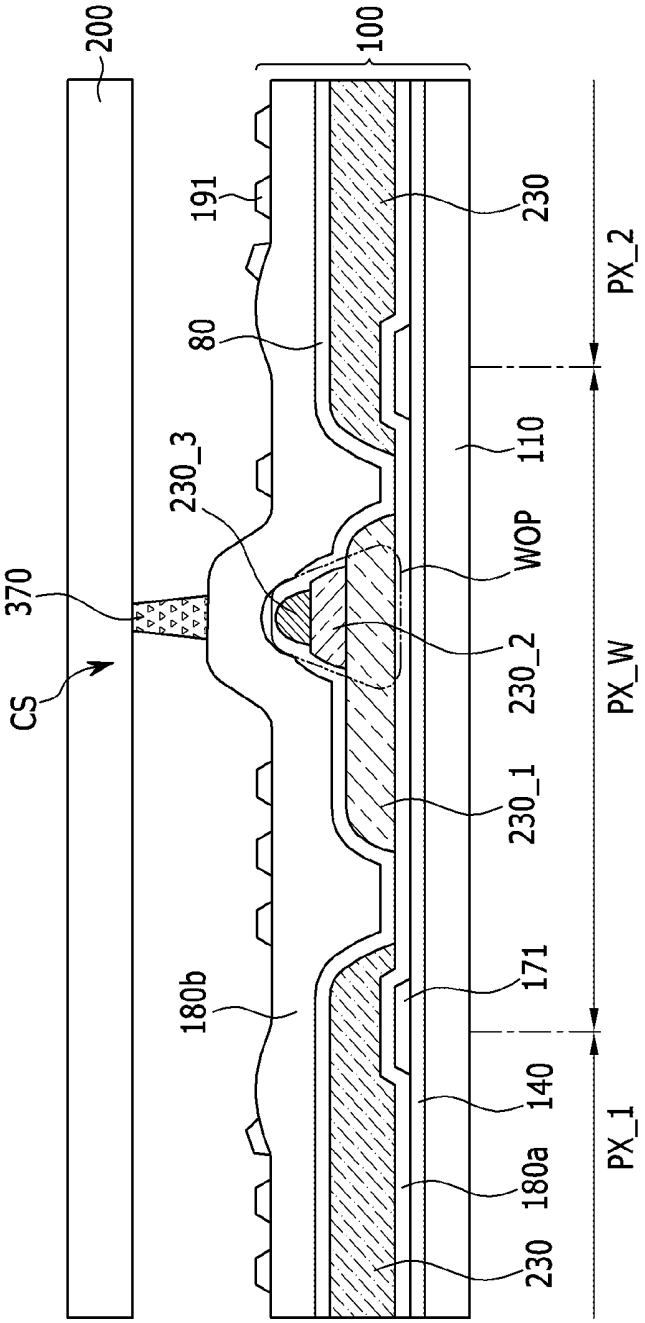
200
100
191
80
230_3
370
CS
180b
230
PX_2
110
WOP
230_2
PX_W
230_1
171
140
180a
PX_1
230

FIG. 44

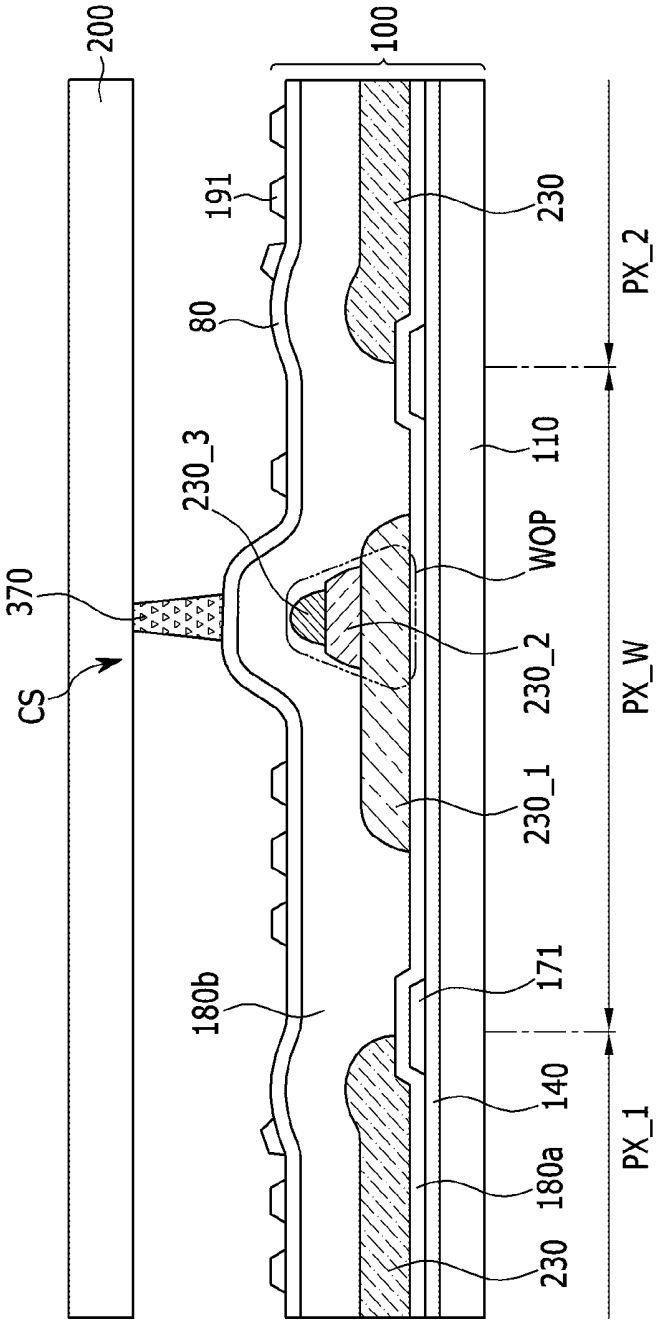
200
100
191
80
230_3
370
CS
180b
230
PX_2
110
WOP
230_2
PX_W
230_1
171
140
180a
PX_1
230

LIQUID CRYSTAL DISPLAY PANEL AND MANUFACTURING METHOD THEREOF

CROSS-REFERENCE TO RELATED APPLICATION

[0001] This application claims priority to and the benefit of Korean Patent Application No. 10-2014-0097531 filed in the Korean Intellectual Property Office on Jul. 30, 2014, the entire contents of which are incorporated herein by reference.

BACKGROUND

[0002] (a) Technical Field

[0003] The present application relates to a liquid crystal display panel and a manufacturing method thereof, and more particularly, to a liquid crystal display panel including white pixels and a manufacturing method thereof.

[0004] (b) Description of the Related Art

[0005] A liquid crystal display is a typical light-receiving type display device as one of display devices which are widely used presently. The liquid crystal display includes a liquid crystal display panel including a plurality of pixels and a backlight unit supplying light to the liquid crystal display panel. The liquid crystal display panel includes a liquid crystal layer and a field generating electrode generating an electric field in the liquid crystal layer.

[0006] The field generating electrode includes a pixel electrode and an opposed electrode. The pixel electrode is connected to a switching element such as a thin film transistor (TFT) to receive a data voltage corresponding to an input image signal. The opposed electrode may receive a common voltage and may be formed over the entire surface of the display panel. The intensity of the electric field generated in the liquid crystal layer is controlled by applying the voltages to the pixel electrode and the opposed electrode to rearrange liquid crystal molecules, and as a result, a desired image may be displayed by controlling an amount of transmitted light.

[0007] The liquid crystal display includes two substrates facing each other with the liquid crystal layer therebetween, and in this case, the field generating electrodes may be provided on two substrates facing each other, respectively, and the two field generating electrodes may be positioned on one substrate.

[0008] For example, the pixel electrode receiving the data voltage in the field generating electrodes and a plurality of thin film transistors are arranged on one of two substrates facing each other, and a plurality of color filters representing basic colors such as red, green, and blue and a light blocking member which may prevent light leakage between the pixels may be formed on the other substrate. Unlike this, at least one of the light blocking member and the color filter may be formed on the same substrate as the pixel electrode and the thin film transistor.

[0009] The liquid crystal display includes red pixels, green pixels, and blue pixels which may display images of red, green, and blue which are the primary colors, respectively. The red pixel, the green pixel, and the blue pixel form one dot and may implement various color displays by controlling luminance of each pixel. However, since the red pixel, the green pixel, and the blue pixel include color filters, an amount of light emitted from the backlight is decreased by passing through the color filters, and as a result, the luminance of the image deteriorates. In order to solve the problem, the liquid crystal display further includes white pixels representing white because color filters are not included, in addition to the pixels representing the basic colors. The white pixel does not include the color filter, and as a result, the luminance of the image may be increased.

[0010] The above information disclosed in this Background section is only for enhancement of understanding of the background and therefore it may contain information that does not form the prior art that is already known in this country to a person of ordinary skill in the art.

SUMMARY

[0011] In the case where a liquid crystal display includes white pixels, generally, a material such as a resin for a white filter is deposited on the entire surface of a substrate and then needs to be patterned by a method such as a photolithography process. Accordingly, in the case of adding the white pixels, luminance may be increased, but the photolithography process is added, and as a result, a processing time, processing cost, and the like are increased, and a manufacturing process is complicated.

[0012] Embodiments have been made in an effort to reduce a manufacturing time, manufacturing cost, and the like by simplifying a manufacturing process of a liquid crystal display including white pixels.

[0013] An exemplary embodiment provides a liquid crystal display panel including: a first substrate and a second substrate facing each other; a liquid crystal layer positioned between the first substrate and the second substrate; a plurality of color filters positioned on the first substrate and representing different colors from each other, at least two of the plurality of color filters overlap with each other on the first substrate to form an overlapping portion, and the overlapping portion forms a first spacer; a transparent filter positioned on the first substrate and positioned in a transmitting area of a white pixel; and a second spacer including the same material as the transparent filter.

[0014] Another exemplary embodiment provides a liquid crystal display panel including: a first substrate and a second substrate facing each other; a liquid crystal layer positioned between the first substrate and the second substrate; a plurality of color filters positioned on the first substrate and representing different colors from each other; and a passivation layer positioned on the first substrate and the color filters and including an organic material, in which at least two of the plurality of color filters overlap with each other on the first substrate to form an overlapping portion, the overlapping portion forms a spacer, a thickness of the passivation layer positioned in a transmitting area of a white pixel is larger than or substantially the same as a thickness of a color filter of the color filters positioned in a transmitting area of a color pixel, and the thickness of the passivation layer positioned in the transmitting area of the white pixel is larger than a thickness of the passivation layer positioned in the transmitting area of the color pixel.

[0015] Yet another exemplary embodiment provides a liquid crystal display panel including: a first substrate and a second substrate facing each other; a liquid crystal layer positioned between the first substrate and the second substrate; and a plurality of color filters positioned on the first substrate and representing different colors from each other, in which the plurality of color filters includes at least two color filters in white positioned in a transmitting area of a white pixel and representing different colors from each other, and two or more of the at least two color filters in white overlap

with each other in the transmitting area of the white pixel to form an overlapping portion in white.

[0016] Still another exemplary embodiment provides a manufacturing method of a liquid crystal display panel including: forming a plurality of color filters representing different colors on a first substrate; and forming a transparent filter and a transparent spacing member on the first substrate through a same process, in which at least two of the plurality of color filters overlap with each other on the first substrate to form an overlapping portion which protrudes above the first substrate.

[0017] Still another exemplary embodiment provides a manufacturing method of a liquid crystal display panel including: forming a plurality of color filters representing different colors from each other on a first substrate; and forming a passivation layer including an organic material on the first substrate, in which at least two of the plurality of color filters overlap with each other on the first substrate to form an overlapping portion which protrudes above the first substrate, a thickness of the passivation layer positioned in a transmitting area of a white pixel is larger than or substantially the same as a thickness of a color filter of the color filters positioned in a transmitting area of a color pixel, and the thickness of the passivation layer positioned in the transmitting area of the white pixel is larger than a thickness of the passivation layer positioned in the transmitting area of the color pixel.

[0018] Still another exemplary embodiment provides a manufacturing method of a liquid crystal display panel including: forming a plurality of color filters representing different colors from each other on a first substrate, in which the plurality of color filters includes at least two color filters in white which are positioned in a transmitting area of a white pixel and representing different colors from each other, and two or more of the at least two color filters in white overlap with each other in the transmitting area of the white pixel to form an overlapping portion in white.

[0019] According to the exemplary embodiments, a manufacturing process of the liquid crystal display panel including white pixels is simplified to reduce a manufacturing time, manufacturing costs, and the like.

BRIEF DESCRIPTION OF THE DRAWINGS

[0020] FIG. **1**A is a schematic cross-sectional view of a liquid crystal display panel according to an exemplary embodiment.

[0021] FIG. **1**B is a layout view of the liquid crystal display panel according to the exemplary embodiment.

[0022] FIGS. **2**, **3**, **4**, **5**, **6**, **7** are cross-sectional views illustrating the liquid crystal display panel illustrated in FIG. **1**B taken along line respectively.

[0023] FIG. **8**A is a layout view of a liquid crystal display panel according to another exemplary embodiment.

[0024] FIGS. **8**B and **9** are cross-sectional views illustrating the liquid crystal display panel illustrated in FIG. **8**A taken along line VIII-VIII, respectively.

[0025] FIG. **10**A is a layout view of a liquid crystal display panel according to yet another exemplary embodiment.

[0026] FIGS. **10**B and **11**, **12**, **13**, **14**, **15**, **16**, **17**, **18**, **19**, **20**, **21**, **22**, **23**, **24**, **25**, **26**, **27**, **28**, **29**, **30**, **31**, **32**, **33** are cross-sectional views illustrating the liquid crystal display panel illustrated in FIG. **10**A taken along line X-X, respectively.

[0027] FIG. **34**A is a layout view of a liquid crystal display panel according to still another exemplary embodiment.

[0028] FIGS. **34**B and **35**, **36**, **37** are cross-sectional views illustrating the liquid crystal display panel illustrated in FIG. **34**A taken along line XXXIV-XXXIV, respectively.

[0029] FIG. **38** is a layout view of three adjacent pixels of a liquid crystal display panel according to still another exemplary embodiment.

[0030] FIGS. **39**, **40**, **41**, **42**, **43**, **44** are cross-sectional views illustrating the liquid crystal display panel illustrated in FIG. **38** taken along line XXXIX-XXXIX, respectively.

DETAILED DESCRIPTION OF THE EMBODIMENTS

[0031] The inventive concept will be described more fully hereinafter with reference to the accompanying drawings, in which exemplary embodiments are shown. As those skilled in the art would realize, the described embodiments may be modified in various different ways, all without departing from the spirit or scope of the inventive concept.

[0032] In the drawings, the thickness of layers, films, panels, regions, etc., are exaggerated for clarity. Like reference numerals designate like elements throughout the specification. It will be understood that when an element such as a layer, film, region, or substrate is referred to as being "on" another element, it can be directly on the other element or intervening elements may also be present. In contrast, when an element is referred to as being "directly on" another element, there are no intervening elements present.

[0033] Accordingly, the drawings and description are to be regarded as illustrative in nature and not restrictive. Like reference numerals designate like elements throughout the specification.

[0034] Throughout this specification and the claims that follow, when it is described that an element is "coupled" to another element, the element may be "directly coupled" to the other element or "electrically coupled" to the other element through a third element. In addition, unless explicitly described to the contrary, the word "comprise" and variations such as "comprises" or "comprising", will be understood to imply the inclusion of stated elements but not the exclusion of any other elements.

[0035] First, a liquid crystal display including a liquid crystal display panel according to an exemplary embodiment will be described with reference to FIG. **1**A.

[0036] Referring to FIG. **1**A, a liquid crystal display **1** according to an exemplary embodiment includes a liquid crystal display panel **300** and a backlight unit **900** supplying light to the liquid crystal display panel **300**. The light supplied by the backlight unit **900** may be white light, and also be light of a basic color having a predetermined wavelength.

[0037] The liquid crystal display panel **300** includes a thin film transistor panel **100** and an opposed panel **200** facing each other, and a liquid crystal layer **3** positioned between the two panels **100** and **200**. Although not illustrated, when viewed on a plane, the liquid crystal display panel **300** according the exemplary embodiment includes a display area displaying an image, and the display area includes a plurality of pixels. Herein, viewing the liquid crystal display panel **300** on the plane means that the liquid crystal display panel **300** is viewed from an observing direction in a vertical direction to an upper surface or a lower surface of the liquid crystal display panel **300**.

[0038] The thin film transistor panel **100** includes a plurality of thin film transistors and a plurality of signal lines connected thereto. The signal lines may include a gate line

transferring a gate signal to the thin film transistor and a data line transferring a data signal to the thin film transistor. The thin film transistor, as a switching element, may be controlled according to the gate signal to transfer a data voltage of the data line.

[0039] A plurality of color filters may be positioned on the opposed panel **200**, but is not limited thereto. The color filters may transmit light of a color having a predetermined wavelength, not white, and may include a plurality of basic color filters for implementing a color display. An example of the basic color may include the three primary colors of red, green, and blue. The color filter may be positioned on the thin film transistor panel **100**.

[0040] The liquid crystal layer **3** includes liquid crystal molecules (not illustrated). The liquid crystal layer **3** may have positive dielectric anisotropy or negative dielectric anisotropy. When an electric field is not applied to the liquid crystal layer **3**, the liquid crystal molecules may be aligned so that long axes are almost horizontal or vertical to the surface of the thin film transistor panel **100** or the opposed panel **200**. To this end, an alignment layer may be formed on an inner surface of the thin film transistor panel **100** or the opposed panel **200**. The alignment layer may be formed by a method of physical treatment such as rubbing, optical treatment such as light irradiation, or a chemical treatment after coating an aligning agent on the inner surface of the panel. Further, the alignment layer or the liquid crystal layer **3** may include an alignment assisting means such as a polymer for aligning the liquid crystal molecules or giving a pretilt. The alignment assisting means may be formed by an optical or chemical method.

[0041] The thin film transistor panel **100** according to the exemplary embodiment includes a pixel electrode (not illustrated) receiving a data voltage through the thin film transistor. The opposed panel **200** or the thin film transistor panel **100** includes an opposed electrode (not illustrated). Both the pixel electrode and the opposed electrode are field generating electrodes which may generate the electric field in the liquid crystal layer **3**. When the voltages are applied to the pixel electrode and the opposed electrode, the electric field is generated in the liquid crystal layer **3**, and the liquid crystal molecules are rearranged. The rearrangement degree of the liquid crystal molecules may be controlled by controlling the intensity of the electric field generated in the liquid crystal layer **3**, and as a result, a change degree of polarization of light passing through the liquid crystal layer **3** may be controlled. Then, the light passing through the liquid crystal layer **3** may control transmittance through a polarizer and the like to display an image.

[0042] Next, a detailed structure of the opposed panel **200** included in the liquid crystal display panel according to the exemplary embodiment will be described with reference to FIGS. **1**B and **2** to **9** in addition to FIG. **1**A.

[0043] FIG. **1**B is a layout view of the liquid crystal display panel according to the exemplary embodiment, FIGS. **2** to **7** are cross-sectional views illustrating the liquid crystal display panel illustrated in FIG. **1**B taken along line II-II, respectively, FIG. **8**A is a layout view of a liquid crystal display panel according to another exemplary embodiment, and FIGS. **8**B and **9** are cross-sectional views illustrating the liquid crystal display panel illustrated in FIG. **8**A taken along line respectively.

[0044] Referring to FIGS. **1**B and **2**, the liquid crystal display panel according to the exemplary embodiment includes a plurality of pixels, and the plurality of pixels includes a plurality of color pixels PX_**1**, PX_**2**, and PX_**3**, and white pixels PX_W. The plurality of pixels may be arranged substantially in a matrix form, but is not limited thereto.

[0045] The color pixels PX_**1**, PX_**2**, and PX_**3** representing different colors and the white pixel PX_W adjacent thereto form one dot together to display an image having various colors including gray, white, and black. Particularly, the white pixel PX_W is transparent without representing the colors to increase the luminance of the image represented by a dot to which the white pixel belongs.

[0046] Here, the pixel may mean a unit area in which an image corresponding to one input image signal is displayed, and include a transmitting area (referred to as an aperture area) in which light is actually transmitted or emitted and a light blocking area in which the light is blocked. In the light blocking area, an electric device such as a thin film transistor of the corresponding pixel or a light blocking member **220** may be positioned.

[0047] In the exemplary embodiment, only three kinds of color pixels PX_**1**, PX_**2**, and PX_**3** are illustrated, but the number of color pixels PX_**1**, PX_**2**, and PX_**3** representing different colors is not limited thereto. Further, it is illustrated that one dot includes only one white pixel PX_W, but the number of white pixels PX_W included in one dot is not limited thereto.

[0048] The opposed panel **200** according to the exemplary embodiment includes color filters **230**, a white filter **330**, and the light blocking member **220** which are positioned on a substrate **210**, when viewed in a cross-sectional structure.

[0049] The substrate **210** may be made of an insulating material such as glass, plastic, or the like.

[0050] The light blocking member **220** may be positioned on the substrate **210**. The light blocking member **220** positioned in the display area is called a black matrix, and has a plurality of openings defining transmitting areas of the pixels PX_**1**, PX_**2**, PX_**3**, and PX_W. The light blocking member **220** is positioned between the adjacent pixels PX_**1**, PX_**2**, PX_**3**, and PX_W to prevent light leakage. The light blocking member **220** may include a pigment for blocking light such as black carbon, and include a photosensitive organic material.

[0051] The plurality of color filters **230** is positioned on the substrate **210** and the light blocking member **220**. The color filter **230** includes a pigment representing a color, and may include a binder, a photoinitiator, and an organic material such as a monomer. The color filters **230** may include a red filter, a green filter, and a blue filter which may represent three primary colors such as red, green, and blue, respectively. However, the colors represented by the color filters **230** are not limited thereto, and may represent other basic colors, for example, three primary colors such as magenta, cyan, and yellow.

[0052] The color filter **230** representing the corresponding color is positioned on one of the color pixels PX_**1**, PX_**2**, and PX_**3**. On a partial area of the substrate **210**, the light blocking member **220**, and at least two of the plurality of color filters **230** are stacked to overlap with each other to form an overlapping portion OP. The overlapping portion OP may be positioned at a place which overlaps with the light blocking member **220**, the thin film transistor of the thin film transistor panel **100**, and the signal lines such as the gate line and the data line, but is not limited thereto. FIG. **2** illustrates an example in which two color filters **230** having different colors are stacked to overlap with each other on the light blocking

member **220**. Unlike those illustrated in FIG. **2**, the light blocking member **220** may not be positioned below the color filters **230** overlapping with each other.

[0053] For convenience, the color filter **230** positioned at the bottom among the color filters **230** forming the overlapping portion OP is called a first color filter **230_1**, and a color filter at an n-th (n is a natural number of 2 or more) position thereon is called an n-th color filter **230**_*n*.

[0054] The color filters **230** overlapping with each other to form the overlapping portion OP may be connected with or spaced apart from the color filters **230** of the adjacent color filters PX_**1**, PX_**2**, and PX_**3** as illustrated in FIG. **2**.

[0055] At the overlapping portion OP, a thickness B**1** of the first color filter **230_1** positioned on the light blocking member **220** may be smaller than a thickness B**0** of the color filter **230** positioned in the transmitting areas of the color pixels PX_**1**, PX_**2**, and PX_**3**. For example, the thickness B**1** may be about 30% to about 70% of the thickness B**0**. The thickness B**0** of the color filter **230** positioned in the transmitting areas of the color pixels PX_**1**, PX_**2**, and PX_**3** may be about 1.5 μm to about 2.5 μm, but is not limited thereto.

[0056] At the overlapping portion OP, a thickness B**2** of a second color filter **230_2** positioned on the first color filter **230_1** may be smaller than the thickness B**0** of the color filter **230** positioned in the transmitting areas of the color pixels PX_**1**, PX_**2**, and PX_**3** and the thickness B**1** of the first color filter **230_1**. For example, the thickness B**2** may be smaller than the thickness B**1** and may be about 20% to about 50% of the thickness B**0**. Furthermore, a thickness of the n-th color filter **230**_*n* (e.g., the thickness B**2** of the second color filter **230_2**) may be smaller than a thickness of an n−1-th color filter **230**_*n*−1 therebelow (e.g., the thickness B**1** of the first color filter **230_1**), and for example, may be about 30% to about 70% of the thickness of the n−1-th color filter **230**_*n*−1.

[0057] The thickness of the color filters **230** forming the overlapping portion OP may be controlled according to an area of the overlapping region.

[0058] At the overlapping portion OP, an overlapping region of the n-th color filter **230**_*n* may be smaller than or the same as an overlapping region of the n−1-th color filter **230**_*n*−1 therebelow. Further, the overlapping region of the n-th color filter **230**_*n* with the n−1-th color filter **230**_*n*−1 may be positioned in the overlapping region of the n−1-th color filter **230**_*n*−1 and a layer therebelow.

[0059] An overlapping width of the color filter **230** positioned at the top among the color filters **230** forming the overlapping portion OP may be, for example, 20 μm to about 50 μm. Here, the overlapping width means a width of a portion overlapping with the layer therebelow. In the exemplary embodiment illustrated in FIG. **2**, an overlapping width A**2** of the second color filter **230_2** overlapping with the first color filter **230_1** may be about 20 μm to about 50 μm, and an overlapping width A**1** of the first color filter **230_1** overlapping with the light blocking member **220** may be larger than or the same as the overlapping width A**2**.

[0060] When the overlapping portion is formed by a design condition as described above, the overlapping portion may be stably formed.

[0061] An overcoat layer **250** is entirely formed on the color filter **230** and the substrate **210**. The overcoat layer **250** includes a transparent organic material, and flatness on the substrate **210** may be controlled by properly controlling the viscosity. A height of the upper surface of the overcoat layer **250** in the transmitting area of the white pixel PX_W may be smaller than a height of the upper surface of the overcoat layer **250** in the transmitting areas of the color pixels PX_**1**, PX_**2**, and PX_**3**, and a difference in height may vary according to the viscosity of the overcoat layer **250**.

[0062] A transparent filter **330** and a transparent spacing member **350** are positioned on the overcoat layer **250**.

[0063] The transparent filter **330** is also referred to as a white filter. The transparent filter **330** uses a term of a filter for convenience, but means a filter in which a wavelength of light passing through the transparent filter **330** is not substantially changed and the color of the transmitted light may be almost maintained. That is, when white light is incident to the transparent filter **330**, the white light is emitted as it is, and when green light is incident to the transparent filter **330**, the green light may be emitted as it is. However, the wavelength of the transmitted light may be changed in a predetermined range according to a characteristic of the transparent filter **330**. For example, in the case where the green light passes through the transparent filter **330**, even though the green light is emitted, the green light in which a color coordinate is changed in a predetermined range may be emitted.

[0064] The transparent filter **330** includes a portion positioned in the transmitting area of the white pixel PX_W. The transparent filter **330** is positioned at a portion where the height of the upper surface of the overcoat layer **250** is small so as to compensate for a difference in height of the overcoat layer **250**. Accordingly, the height of the upper surface of the overcoat layer **250** in the color pixels PX_**1**, PX_**2**, and PX_**3** is substantially similar to the height of the upper surface of the transparent filter **330** in the white pixel PX_W, and as a result, the overcoat layer **250** may be entirely flattened. As a result, a cell gap of the white pixel PX_W may be similar to or substantially the same as cell gaps of the color pixels PX_**1**, PX_**2**, and PX_**3**. Then, when the liquid crystal display panel is viewed from the side, it is possible to prevent a color coordinate from being distorted. Particularly, in the exemplary embodiment, the overall flatness is easily controlled by properly controlling at least one of the viscosity of the overcoat layer **250** and the thickness of the transparent filter **330**.

[0065] As illustrated in FIG. **2**, the transparent spacing member **350** may be positioned on at least one of the plurality of overlapping portions OP formed so that the light blocking member **220** and at least two of the plurality of color filters **230** are stacked to overlap with each other, and may be positioned at a place except for the transmitting area of the pixel of the place except for the overlapping portion OP. Particularly, as illustrated in FIG. **2**, in the case where the transparent spacing member **350** is positioned at a place overlapping with the overlapping portion OP, the overlapping portion OP, the transparent spacing member **350**, and the overcoat layer **250** therebetween has an upper surface higher than the periphery and protrudes to form a main spacer CS_M. The main spacer CS_M may serve to maintain the cell gap of the liquid crystal layer **3**, that is, a space between the opposed panel **200** and the thin film transistor panel **100**.

[0066] The upper surface of the overlapping portion OP where the transparent spacing member **350** is not positioned is lower than the upper surface of the main spacer CS_M, but higher than the periphery and protrudes to form a sub spacer CS_S. The sub spacer CS_S may serve to maintain the cell gap of the liquid crystal layer **3** even in the case where the opposed panel **200** or the thin film transistor panel **100** is bent inwards by external pressure.

[0067] A width A**10** of the transparent spacing member **350** may be smaller than or the same as the overlapping width A**2** of the second color filter **230_2** positioned at the top of the overlapping portion OP. Further, the overlapping region of the transparent spacing member **350** with the second color filter **230_2** may be positioned in the overlapping region of the second color filter **230_2** and the first color filter **230_1** therebelow.

[0068] The transparent spacing member **350** and the transparent filter **330** may be formed with the same material in the same process. The transparent spacing member **350** and the transparent filter **330** may include a transparent organic material, and for example, may include an acryl-based resin and the like.

[0069] A thickness B**10** of the transparent spacing member **350** may be the same as or different from a thickness B**11** of the transparent filter **330**. In the exemplary embodiment, since the transparent spacing member **350** is positioned at a place higher than the transparent filter **330**, an example in which the thickness B**10** of the transparent spacing member **350** is smaller than the thickness B**11** of the transparent filter **330** is illustrated, but is not limited thereto, and the thickness B**11** of the transparent filter **330** may be smaller than the thickness B**10** of the transparent spacing member **350**. According to another exemplary embodiment, the thickness B**10** of the transparent spacing member **350** and the thickness B**11** of the transparent filter **330** may be formed so as to be different from each other by using a photomask including a halftone.

[0070] An opposed electrode **270** is positioned on the overcoat layer **250** and the transparent filter **330**. The opposed electrode **270** may include a transparent conductive material such as ITO and IZO, and transfer a common voltage. The opposed electrode **270** may be patterned, and the opposed electrode **270** is not positioned on the transparent spacing member **350** and the overlapping portion OP.

[0071] When a manufacturing method of the opposed panel **200** will be described, first, a material for the light blocking member is deposited on the substrate **210**, and the light blocking member **220** having a plurality of openings is formed by a photolithography process of exposing and developing the material.

[0072] Next, a plurality of color filters **230** is formed on the light blocking member **220**. Particularly, as illustrated in FIG. **2**, an overlapping portion OP where the light blocking member **220** and at least two of the plurality of color filters **230** overlap with each other is formed. In this case, the patterning of the color filter **230** may use a photographic process.

[0073] Next, an organic material is deposited on the entire surface of the substrate **210** to form the overcoat layer **250**.

[0074] Next, a transparent organic material is deposited and patterned on the overcoat layer **250** to form the transparent spacing member **350** and the transparent filter **330** together. In this case, the patterning of the transparent spacing member **350** and the transparent filter **330** may use a photolithography process using one photomask.

[0075] Next, a transparent conductive material is deposited and patterned on the overcoat layer **250** and the transparent filter **330** to form the opposed electrode **270**.

[0076] As such, according to the exemplary embodiment, since the transparent spacing member **350** forming the main spacer CS_M and the transparent filter **330** of the white pixel PX_W are simultaneously formed by one photolithography process, the process may be simplified without adding the photomask and the photolithography process, and a processing time and processing cost may be reduced. As described above, the transparent filter **330** is formed so that the cell gap of the white pixel PX_W is the same as the cell gaps of the color pixels PX_**1**, PX_**2**, and PX_**3** to prevent a change in color coordinate at the side and increase display quality.

[0077] Furthermore, according to the exemplary embodiment, since the light blocking member **220** and at least two of the plurality of color filters **230** overlap with each other to form a plurality of overlapping portions OP and the transparent spacing member **350** is formed at a part of the overlapping portions OP, both the main spacer CS_M and the sub spacer CS_S having different heights may be easily formed without an additional process, and the cell gap of the liquid crystal display panel may be stably maintained even by various external pressures.

[0078] Further, according to the exemplary embodiment, the main spacer CS_M and the sub spacer CS_S may be stably formed.

[0079] The opposed panel **200** manufactured as described above is attached to the thin film transistor panel **100** separately manufactured, and a liquid crystal material is injected between the two substrates **110** and **210** to complete the liquid crystal display panel. The thin film transistor panel **100** includes the substrate **110** as described below.

[0080] Next, FIG. **3** illustrates an example in which the opposed panel **200** according to the exemplary embodiment is almost the same as that of the exemplary embodiment illustrated in FIGS. **1**B and **2**, but three color filters **230** having different colors overlap with each other to form the overlapping portion OP on the light blocking member **220**. That is, the overlapping portion OP may include the light blocking member **220**, the first color filter **230_1** thereon, the second color filter **230_2** thereon, and the third color filter **230_3** thereon.

[0081] At the overlapping portion OP, a thickness B**1** of the first color filter **230_1** positioned on the light blocking member **220** may be smaller than a thickness B**0** of the color filter **230** positioned in the transmitting areas of the color pixels PX_**1**, PX_**2**, and PX_**3**, and for example, the thickness B**1** may be about 30% to about 70% of the thickness B**0**. At the overlapping portion OP, a thickness B**2** of the second color filter **230_2** may be smaller than the thickness B**1** of the first color filter **230_1**, and for example, may be about 20% to about 50% of the thickness B**0**. Further, a thickness B**3** of the third color filter **230_3** may be smaller than the thickness B**2** of the second color filter **230_2**, and for example, may be about 10% to about 40% of the thickness B**0**.

[0082] An overlapping width A**3** of the third color filter **230_3** positioned at the top of the color filters **230** forming the overlapping portion OP may be, for example, about 20 μm to about 50 μm, the overlapping width A**2** of the second color filter **230_2** therebelow may be larger than the overlapping width A**3**, and the overlapping width A**1** of the first color filter **230_1** may be larger than the overlapping width A**2**.

[0083] In the exemplary embodiment, the width A**10** of the transparent spacing member **350** positioned on the overlapping portion OP is smaller than or the same as the overlapping width A**3** of the third color filter **230_3** positioned on the top of the overlapping portion OP to be stably stacked.

[0084] Besides, various features and effects of the exemplary embodiment of FIGS. **1**B and **2** may be equally applied even to the exemplary embodiment, and the duplicated description will be omitted.

[0085] Referring now to FIG. **4**, the opposed panel **200** according to the exemplary embodiment is almost the same as that of the exemplary embodiment illustrated in FIGS. **1**B and **2**, but the transparent spacing member **350** may be positioned at the overlapping portion OP and another place except for the transmitting area of the pixel which is not positioned on the overlapping portion OP, for example, a place overlapping with the light blocking member **220** or the thin film transistor.

[0086] In this case, heights of the upper surface of the overlapping portion OP where the light blocking member **220** and at least two of the plurality of color filters **230** overlap with each other and the upper surface of the transparent spacing member **350** may be different from each other or substantially the same as each other. As illustrated in FIG. **4**, when the upper surface of the overlapping portion OP is higher than the upper surface of the transparent spacing member **350**, the overlapping portion OP forms the main spacer CS_M together with the overcoat layer **250** thereon and the like, and the transparent spacing member **350** may form the sub spacer CS_S. Unlike this, when the upper surface of the overlapping portion OP and the upper surface of the transparent spacing member **350** are substantially the same as each other, the overlapping portion OP and the transparent spacing member **350** may serve as the same spacer CS.

[0087] Besides, various features and effects of the exemplary embodiment of FIGS. **1**B and **2** may be equally applied even to the exemplary embodiment, and the duplicated description will be omitted.

[0088] Next, FIG. **5** illustrates an example in which the opposed panel according to the exemplary embodiment is almost the same as that of the exemplary embodiment illustrated in FIG. **4**, but three color filters **230** having different colors overlap with each other to form the overlapping portion OP on the light blocking member **220**. That is, the overlapping portion OP may include the light blocking member **220**, the first color filter **230_1** thereon, the second color filter **230_2** thereon, and the third color filter **230_3** thereon.

[0089] Besides, various features and effects of the exemplary embodiment of FIG. **4** and the exemplary embodiment of FIG. **3** may be equally applied even to the exemplary embodiment, and the duplicated description will be omitted.

[0090] Next, FIG. **6** illustrates an example in which the opposed panel according to the exemplary embodiment is almost the same as that of the exemplary embodiment illustrated in FIG. **4**, but the upper surface of the overlapping portion OP is lower than the upper surface of the transparent spacing member **350**. In this case, the overlapping portion OP forms the sub spacer CS_S together with the overcoat layer **250** thereon and the like, and the transparent spacing member **350** may form the main spacer CS_M. Unlike this, when the upper surface of the overlapping portion OP and the upper surface of the transparent spacing member **350** are substantially the same as each other, the overlapping portion OP and the transparent spacing member **350** may serve as the same spacer CS.

[0091] Next, FIG. **7** illustrates an example in which the opposed panel according to the exemplary embodiment is almost the same as that of the exemplary embodiment illustrated in FIG. **6**, but three color filters **230** having different colors overlap with each other to form the overlapping portion OP on the light blocking member **220**. That is, the overlapping portion OP may include the light blocking member **220**, the first color filter **230_1** thereon, the second color filter **230_2** thereon, and the third color filter **230_3** thereon.

[0092] Besides, various features and effects of the exemplary embodiment of FIG. **6** and the exemplary embodiment of FIG. **3** may be equally applied even to the exemplary embodiment, and the duplicated description will be omitted.

[0093] Next, referring to FIGS. **8**A and **8**B, the opposed panel according to the exemplary embodiment is almost the same as that of the exemplary embodiment illustrated in FIGS. **1**B and **2**, but the transparent filter **330** and the transparent spacing member **350** are not formed. That is, in the white pixel PX_W, a separate transparent filter is not formed and a separate spacer for maintaining the cell gap is not formed. Accordingly, the photolithography process for forming the transparent filter and the transparent spacing member may be omitted, and as a result, the manufacturing process is more simplified. Instead, the upper surface of the overlapping portion OP formed when the light blocking member **220** and at least two of the plurality of color filters **230** overlap with each other is formed to be higher than the periphery, and as a result, the overlapping portion OP and the overcoat layer **250** thereon serve as a spacer CS maintaining the cell gap together.

[0094] The transmitting area of the white pixel PX_W may be almost filled by the overcoat layer **250**. Accordingly, the thickness of the overcoat layer **250** positioned in the transmitting area of the white pixel PX_W may be substantially the same as or larger than the thickness of the color filter **230** positioned in the transmitting area of the color pixels PX_**1**, PX_**2**, and PX_**3**. Further, the thickness of the overcoat layer **250** positioned in the transmitting area of the white pixel PX_W may be larger than the overcoat layer **250** positioned on the color filters **230** of the color pixels PX_**1**, PX_**2**, and PX_**3**. Accordingly, in the white pixel PX_W, the height of the upper surface of the overcoat layer **250** may be the same as or higher than the height of the upper surface of the color filter **230** positioned in the transmitting area of the color pixels PX_**1**, PX_**2**, and PX_**3**.

[0095] Since the upper surface of the overcoat layer **250** in the white pixel PX_W sags below the upper surface of the overcoat layer **250** in the color pixels PX_**1**, PX_**2**, and PX_**3**, the overcoat layer **250** may include a high flattened organic material having sufficient viscosity so as to prevent the cell gap of the white pixel PX_W from being different from the cell gap of the color pixels PX_**1**, PX_**2**, and PX_**3**.

[0096] Next, FIG. **9** illustrates an example in which the opposed panel according to the exemplary embodiment is almost the same as that of the exemplary embodiment illustrated in FIGS. **8**A and **8**B, but three color filters **230** having different colors overlap with each other to form the overlapping portion OP on the light blocking member **220**. That is, the overlapping portion OP may include the light blocking member **220**, the first color filter **230_1** thereon, the second color filter **230_2** thereon, and the third color filter **230_3** thereon.

[0097] Besides, various features and effects of the exemplary embodiment of FIGS. **8**A and **8**B and the exemplary embodiment of FIG. **3** may be equally applied even to the exemplary embodiment, and the duplicated description will be omitted.

[0098] Next, a detailed structure of the opposed panel **100** included in the liquid crystal display panel according to the exemplary embodiment will be described with reference to FIGS. **10**A, **10**B, and **11** to **37** in addition to FIG. **1**A.

[0099] FIG. **10**A is a layout view of a liquid crystal display panel according to yet another exemplary embodiment, FIGS. **10**B and **11** to **33** are cross-sectional views illustrating

the liquid crystal display panel illustrated in FIG. **10**A taken along line X-X, respectively, FIG. **34**A is a layout view of a liquid crystal display panel according to still another exemplary embodiment, and FIGS. **34**B and **35** to **37** are cross-sectional views illustrating the liquid crystal display panel illustrated in FIG. **34**A taken along line XXXIV-XXXIV, respectively.

[0100] Referring to FIGS. **10**A and **10**B, the thin film transistor panel **100** according to the exemplary embodiment includes a plurality of thin film transistors positioned on a substrate **110**, a pixel electrode **191** connected thereto, and the like.

[0101] The substrate **110** may be made of an insulating material such as glass, plastic, or the like.

[0102] A gate conductor (not illustrated) including a gate line is positioned on the substrate **110**, and a gate insulating layer **140** is positioned thereon. The gate insulating layer **140** may include an organic insulating material such as silicon nitride and silicon oxide.

[0103] A semiconductor layer (not illustrated) and a data conductor are positioned on the gate insulating layer **140**. The data conductor includes a plurality of data lines **171** transferring data voltages. The data line **171** may be almost extended between the adjacent pixels, but is not limited thereto. FIG. **10**B illustrates an example in which the data line **171** is positioned between the adjacent pixels. In the case where the data line **171** includes a portion extended between the adjacent pixels, the data line **171** may be covered by the light blocking member positioned on the thin film transistor panel **100** or the opposed panel **200**.

[0104] The thin film transistor is connected with the gate line and the data line **171**.

[0105] A first passivation layer **180***a* is positioned on the thin film transistor including the data conductor. The first passivation layer **180***a* may include an inorganic insulating material or an organic insulating material.

[0106] A plurality of color filters **230** is positioned on the first passivation layer **180***a*. A color filter **230** representing the corresponding color is positioned one of the color pixels PX_**1**, PX_**2**, and PX_**3**. On a partial area of the substrate **110**, at least two of the plurality of color filters **230** are stacked to overlap with each other to form an overlapping portion OP. FIG. **10**B illustrates an example in which two color filters **230** of a first color filter **230_1** and a second color filter **230_2** overlap with each other to form the overlapping portion OP. The overlapping portion OP may be positioned at a place overlapping with the thin film transistor, the gate line, the data line **171**, the light blocking member of the opposed panel **200**, and the like, but is not limited thereto.

[0107] The light blocking member may be positioned on the opposed panel **200** or the thin film transistor panel **100**, and when the light blocking member is positioned on the thin film transistor panel **100**, the overlapping portion OP may overlap with the light blocking member.

[0108] The overlapping portion OP may overlap with the data line **171** or be adjacent to the data line **171**.

[0109] The second color filter **230_2** or a color filter positioned thereon of the color filters forming the overlapping portion OP may be connected with the color filter of the adjacent color pixels PX_**1**, PX_**2**, and PX_**3**, or may be spaced apart from the color filter of the adjacent color pixels PX_**1**, PX_**2**, and PX_**3** as illustrated in FIG. **10**B. The first color filter **230_1** may include a portion positioned in the transmitting area of the color pixels PX_**1**, PX_**2**, and PX_**3**.

[0110] At the overlapping portion OP, a thickness D**2** of the second color filter **230_2** may be smaller than a thickness D**1** of the first color filter **230_1** positioned therebelow. For example, the thickness D**2** may be about 30% to about 70% of the thickness D**1**. Furthermore, a thickness of the n-th color filter **230**_*n* configuring the overlapping portion OP may be smaller than a thickness of an n−1-th color filter **230**_*n*−1 therebelow, and for example, may be about 30% to about 70% of the thickness of the n−1-th color filter **230** n−1. The thickness of the color filter positioned at the bottom may be about 2.5 μm to about 4.0 μm, but is not limited thereto.

[0111] Similarly to the exemplary embodiment described above, at the overlapping portion OP, an overlapping area of the n-th color filter **230**_*n* may be smaller than or the same as an overlapping area of the n−1-th color filter **230**_*n*−1 therebelow. Further, the overlapping area of the n-th color filter **230**_*n* with the n−1-th color filter **230**_*n*−1 may be positioned in the overlapping area of the n−1-th color filter **230**_*n*−1 and a layer therebelow. The layer below the n−1-th color filter **203**_*n*−1 may be another color filter or the first passivation layer **180***a*.

[0112] An overlapping width of the color filter **230** positioned at the top among the color filters **230** forming the overlapping portion OP may be, for example, about 20 μm to about 50 μm. In the exemplary embodiment illustrated in FIG. **10**B, an overlapping width C**2** of the second color filter **230_2** may be about 20 μm to about 50 μm.

[0113] A transparent filter **330** and a transparent spacing member **350** may be positioned on the color filter **230** and the first passivation layer **180***a*.

[0114] The transparent filter **330** includes a portion which is positioned in the transmitting area of the white pixel PX_W, and the upper surface thereof may have substantially the same height as the upper surface of the color filter **230** of the color pixels PX_**1**, PX_**2**, and PX_**3**. Accordingly, the upper surface of the substrate **110** may be substantially flattened, and the cell gap of the white pixel PX_W may be formed substantially the same as the cell gap of the color pixels PX_**1**, PX_**2**, and PX_**3**. As a result, when the liquid crystal display panel is viewed from the side, it is possible to prevent a color coordinate from being distorted.

[0115] As illustrated in FIG. **10**B, the transparent spacing member **350** may be positioned on at least one of the plurality of overlapping portions OP formed so that at least two of the plurality of color filters **230** are stacked to overlap with each other, and may be positioned at a place except for the transmitting area of the pixel of the place except for the overlapping portion OP. Particularly, as illustrated in FIG. **10**B, in the case where the transparent spacing member **350** is positioned at a place overlapping with the overlapping portion OP, the overlapping portion OP and the transparent spacing member **350** protrude with an upper surface higher than the periphery to form a main spacer CS_M.

[0116] The upper surface of the overlapping portion OP where the transparent spacing member **350** is not positioned is lower than the upper surface of the main spacer CS_M, but protrudes to be higher than the periphery to form a sub spacer CS_S.

[0117] A width C**10** of the transparent spacing member **350** may be smaller than or the same as the overlapping width C**2** of the second color filter **230_2** positioned at the top of the overlapping portion OP. Further, the overlapping region of the transparent spacing member **350** with the second color filter

230_2 may be positioned in the overlapping region of the second color filter **230_2** and the first color filter **230_1** therebelow.

[0118] The transparent spacing member **350** and the transparent filter **330** may be formed with the same material in the same process. The transparent spacing member **350** and the transparent filter **330** may include a transparent organic material, and for example, may include an acryl-based resin and the like.

[0119] A thickness D**10** of the transparent spacing member **350** may be the same as or different from a thickness D**11** of the transparent filter **330**. In the exemplary embodiment, since the transparent spacing member **350** is positioned at a place higher than the transparent filter **330**, the thickness D**10** of the transparent spacing member **350** may be smaller than the thickness D**11** of the transparent filter **330**. According to another exemplary embodiment, the thickness D**10** of the transparent spacing member **350** and the thickness D**11** of the transparent filter **330** may be different from each other by using a photomask including a halftone.

[0120] A capping layer **80** may be positioned on the second color filter **230_2**, the transparent spacing member **350**, and the transparent filter **330**. The capping layer **80** prevents the color filter **230** and the transparent filter **330** therebelow from being lifted and suppresses the contamination of the liquid crystal layer **3** due to an organic material such as a solvent flowing into from the color filter **230**, thereby preventing defects such as an afterimage which may be caused when the liquid crystal display panel is driven.

[0121] A plurality of pixel electrodes **191** and shielding electrodes **199** are positioned on the capping layer **80**. The pixel electrode **191** and the shielding electrode **199** may include a transparent conductive material such as ITO or IZO.

[0122] The pixel electrode **191** is patterned to have a shape including a plurality of branch electrodes (not illustrated), but is not limited thereto. The pixel electrode **191** is connected with the thin film transistor through contact holes (not illustrated) formed in at least a part of the capping layer **80**, the first passivation layer **180***a*, and the gate insulating layer **140** to receive a data voltage.

[0123] The shielding electrode **199** may include a portion covering the data line **171**. The shielding electrode **199** shields an electric field from the data line **171** to prevent light leakage between the adjacent pixels. Accordingly, a separate light blocking member overlapping with the data line **171** need not be formed to increase an aperture ratio and transmittance of the pixels.

[0124] When a manufacturing method of the thin film transistor panel **100** will be described, first, metal and the like are deposited and patterned on the substrate **110** to form a gate conductor including a gate line.

[0125] Next, the gate insulating layer **140** is deposited on the gate conductor, a semiconductor layer is deposited thereon, and metal and the like are deposited and patterned thereon to form a data conductor including a data line **171**. The gate conductor, the semiconductor layer, and the data conductor may form a plurality of thin film transistors together.

[0126] Next, an insulating material is deposited on the thin film transistor to form the passivation layer **180***a*, and a plurality of color filters **230** is formed thereon. Particularly, as illustrated in FIG. **10**B, an overlapping portion OP where at least two of the plurality of color filters **230** overlap with each other is formed. In this case, the patterning of the color filters **230** may use a photolithography process.

[0127] Next, a transparent organic material is deposited and patterned on the color filter and the first passivation layer **180***a* to form the transparent filter **330** and the transparent spacing member **350**. In this case, the patterning may use a photolithography process using one photomask.

[0128] Next, the capping layer **80** is deposited on the entire surface of the substrate **110**, and then the capping layer **80**, the first passivation layer **180***a*, and the gate insulating layer **140** are patterned by a photolithography process and the like to form contact holes.

[0129] Next, a transparent conductive material such as ITO and IZO is deposited and patterned on the capping layer **80** to form a plurality of pixel electrodes **191** and shielding electrodes **199**.

[0130] As such, according to the exemplary embodiment, since the transparent spacing member **350** forming the main spacer CS_M and the transparent filter **330** of the white pixel PX_W are simultaneously formed by one photolithography process, the process may be simplified without adding the photomask and the photolithography process, and a processing time and processing cost may be reduced. As described above, the transparent filter **330** is formed so that the cell gap of the white pixel PX_W is the same as the cell gaps of the color pixels PX_**1**, PX_**2**, and PX_**3** to prevent a change in color coordinate at the side and increase display quality.

[0131] Furthermore, according to the exemplary embodiment, since at least two of the plurality of color filters **230** overlap with each other to form a plurality of overlapping portions OP and the transparent spacing member **350** is formed at a part of the overlapping portions OP, both the main spacer CS_M and the sub spacer CS_S having different heights may be easily formed without an additional process, and the cell gap of the liquid crystal display panel may be stably maintained even due to various external pressures.

[0132] The thin film transistor panel **100** manufactured as described above is attached to the opposed panel **200** separately manufactured, and a liquid crystal material is injected between the two substrates **110** and **210** to complete the liquid crystal display panel.

[0133] Next, FIG. **11** illustrates an example in which the thin film transistor panel **100** according to the exemplary embodiment is almost the same as that of the exemplary embodiment illustrated in FIGS. **10**A and **10**B, but three color filters **230** having different colors overlap with each other to form an overlapping portion OP. That is, the overlapping portion OP may include a first color filter **230_1**, a second color filter **230_2** thereon, and a third color filter **230_3** thereon.

[0134] At the overlapping portion OP, a thickness D**2** of the second color filter **230_2** may be smaller than a thickness D**1** of the first color filter **230_1** therebelow or the first color filter **230_1** positioned in the transmitting area of the color pixels PX_**1**, PX_**2**, and PX_**3**, and for example, the thickness D**2** may be about 30% to about 70% of the thickness D**1**. At the overlapping portion OP, a thickness D**3** of the third color filter **230_3** may be smaller than the thickness D**2** of the second color filter **230_2**, and for example, may be about 20% to about 50% of the thickness D**1** of the first color filter **230_1**.

[0135] An overlapping width C**3** of the third color filter **230_3** positioned at the top of the color filters **230** forming the overlapping portion OP may be, for example, about 20 μm to

about 50 μm, and an overlapping width C**2** of the second color filter **230_2** therebelow is larger than the overlapping width C**3**.

[0136] In the exemplary embodiment, a width C**10** of the transparent spacing member **350** positioned on the overlapping portion OP is smaller than or the same as the overlapping width C**3** of the third color filter **230_3** positioned on the top of the overlapping portion OP to be stably stacked.

[0137] Besides, various features and effects of the exemplary embodiment of FIGS. **10**A and **10**B may be equally applied even to the exemplary embodiment, and the duplicated description will be omitted.

[0138] Next, referring to FIG. **12**, the thin film transistor panel **100** according to the exemplary embodiment is almost the same as that of the exemplary embodiment illustrated in FIGS. **10**A and **10**B, but positions of the capping layers **80** may be different from each other. For example, as illustrated in FIG. **12**, the capping layer **80** is positioned below the transparent filter **330** and the transparent spacing member **350**, and may be positioned on the second color filter **230_2** of the overlapping portion OP and the first passivation layer **180***a*. The capping layer **80** prevents the color filter **230** therebelow from being lifted and suppresses the contamination of the liquid crystal layer **3** due to an organic material such as a solvent flowing into from the color filter **230**, thereby preventing defects such as an afterimage which may be caused when the liquid crystal display panel is driven.

[0139] As a result, the plurality of pixel electrodes **191** and shielding electrodes **199** may be positioned on the transparent filter **330**.

[0140] Next, FIG. **13** illustrates an example in which the thin film transistor panel **100** according to the exemplary embodiment is almost the same as that of the exemplary embodiment illustrated in FIG. **12** but three color filters **230** having different colors overlap with each other to form an overlapping portion OP. That is, the overlapping portion OP may include a first color filter **230_1**, a second color filter **230_2** thereon, and a third color filter **230_3** thereon.

[0141] Next, referring to FIG. **14**, the thin film transistor panel **100** according to the exemplary embodiment is almost the same as that of the exemplary embodiment illustrated in FIGS. **10**A and **10**B, but may further include a second passivation layer **180***b* positioned between the color filter **230** and the transparent filter **330**. The second passivation layer **180***b* may be made of an organic insulating material, an inorganic insulating material such as SiOC, a compound of the organic insulating material and the inorganic insulating material, or the like. A dielectric constant of the second passivation layer **180***b* may be 3.5 or less, but is not limited thereto.

[0142] The second passivation layer **180***b* includes a portion covering the data line **171**. The second passivation layer **180***b* may be formed on the entire surface of the substrate **110** as illustrated in FIG. **14**, or may be formed only at a part of the substrate **110** so as to cover the data line **171**. The second passivation layer **180***b* lowers a parasitic capacitance between the data line **171** and the pixel electrode **191** or the opposed electrode of the adjacent pixel to reduce a signal delay of the data line **171**.

[0143] The viscosity of the second passivation layer **180***b* is properly controlled to control the flatness of the substrate **110**. A height of the upper surface of the second passivation layer **180***b* in the transmitting area of the white pixel PX_W may be smaller than a height of the upper surface of the second passivation layer **180***b* in the transmitting areas of the color pixels PX_**1**, PX_**2**, and PX_**3**, and a difference in height may vary according to the viscosity of the second passivation layer **180***b*.

[0144] In the exemplary embodiment, the thickness of the color filter **230** positioned at the bottom may be about 1.5 μm to about 2.5 μm, but is not limited thereto.

[0145] According to the exemplary embodiment, a transparent filter **330** and a transparent spacing member **350** are formed on the second passivation layer **180***b*.

[0146] The transparent filter **330** includes a portion positioned in the transmitting area of the white pixel PX_W. The transparent filter **330** is positioned at a portion where the height of the upper surface of the second passivation layer **180***b* is small so as to compensate for a difference in height of the second passivation layer **180***b*. The difference in height according to a position may be reduced to some degree by controlling the viscosity of the second passivation layer **180***b*, but the height of the upper surface of the second passivation layer **180***b* in the white pixel PX_W may be relatively low. According to the exemplary embodiment, since the transparent filter **330** is formed in the transmitting area of the white pixel PX_W, the sum of the thicknesses of the second passivation layer **180***b* and the color filter **230** in the color pixels PX_**1**, PX_**2**, and PX_**3** may be similar to or substantially the same as the sum of the thicknesses of the second passivation layer **180***b* and the transparent filter **330** in the white pixel PX_W. That is, the height of the upper surface of the second passivation layer **180***b* in the color pixels PX_**1**, PX_**2**, and PX_**3** and the height of the upper surface of the transparent filter **330** in the white pixel PX_W are substantially similar to each other, and as a result, the flatness may be entirely improved.

[0147] As a result, a cell gap of the white pixel PX_W may be similar to or substantially the same as cell gaps of the color pixels PX_**1**, PX_**2**, and PX_**3**. Then, when the liquid crystal display panel is viewed from the side, it is possible to prevent a color coordinate from being distorted. Particularly, according to the exemplary embodiment, since the transparent filter **330** which is simultaneously formed with the transparent spacing member **350** is formed in the white pixel PX_W by using the second passivation layer **180***b* of which the viscosity is easily controlled, the overall flatness is more easily controlled.

[0148] In the exemplary embodiment, the capping layer **80** may be omitted.

[0149] Besides, various features and effects of the exemplary embodiment of FIGS. **10**A and **10**B may be equally applied even to the exemplary embodiment, and the duplicated description will be omitted.

[0150] Next, FIG. **15** illustrates an example in which the thin film transistor panel **100** according to the exemplary embodiment is almost the same as that of the exemplary embodiment illustrated in FIG. **14**, but three color filters **230** having different colors overlap with each other to form an overlapping portion OP. That is, the overlapping portion OP may include a first color filter **230_1**, a second color filter **230_2** thereon, and a third color filter **230_3** thereon.

[0151] Besides, various features and effects of the exemplary embodiment of FIGS. **14** and **11** may be equally applied even to the exemplary embodiment, and the duplicated description will be omitted.

[0152] Next, referring to FIG. **16**, the thin film transistor panel **100** according to the exemplary embodiment is almost the same as that of the exemplary embodiment illustrated in

FIG. **14**, but positions of the capping layers **80** may be different from each other. For example, as illustrated in FIG. **16**, the capping layer **80** is positioned below the second passivation layer **180***b*, and may be positioned on the second color filter **230_2** of the overlapping portion OP and the first passivation layer **180***a*. The capping layer **80** may prevent the color filter **230** therebelow from being lifted and suppress the contamination of the liquid crystal layer **3** due to an organic material such as a solvent flowing into from the color filter **230**, thereby preventing defects such as an afterimage which may be caused when the liquid crystal display panel is driven.

[0153] As a result, the plurality of pixel electrodes **191** and shielding electrodes **199** may be positioned on the transparent filter **330** and the second passivation layer **180***b*.

[0154] Next, FIG. **17** illustrates an example in which the thin film transistor panel **100** according to the exemplary embodiment is almost the same as that of the exemplary embodiment illustrated in FIG. **16**, but three color filters **230** having different colors overlap with each other to form an overlapping portion OP. That is, the overlapping portion OP may include a first color filter **230_1**, a second color filter **230_2** thereon, and a third color filter **230_3** thereon.

[0155] Besides, various features and effects of the exemplary embodiment of FIGS. **16** and **11** may be equally applied even to the exemplary embodiment, and the duplicated description will be omitted.

[0156] Referring now to FIG. **18**, the thin film transistor panel **100** according to the exemplary embodiment is almost the same as that of the exemplary embodiment illustrated in FIG. **10**, but the transparent spacing member **350** is not positioned on the overlapping portion OP, but positioned at another place except for the transmitting area of the pixel, for example, a place overlapping with the light blocking member (if present), the thin film transistor, and the signal lines such as the gate line and the data line **171**.

[0157] In this case, heights of the upper surface of the overlapping portion OP where at least two of the plurality of color filters **230** overlap with each other and the upper surface of the transparent spacing member **350** may be different from each other and substantially the same as each other. As illustrated in FIG. **18**, when the upper surface of the overlapping portion OP is higher than the upper surface of the transparent spacing member **350**, the overlapping portion OP forms the main spacer CS_M together with the capping layer **80** thereon and the like, and the transparent spacing member **350** may form the sub spacer CS_S. Unlike this, when the upper surface of the overlapping portion OP and the upper surface of the transparent spacing member **350** are substantially the same as each other, the overlapping portion OP and the transparent spacing member **350** may serve as the same spacer CS.

[0158] Next, FIG. **19** shows an example in which the opposed panel according to the exemplary embodiment is almost the same as that of the exemplary embodiment illustrated in FIG. **18**, but three color filters **230** having different colors overlap with each other to form the overlapping portion OP. That is, the overlapping portion OP may include a first color filter **230_1**, a second color filter **230_2** thereon, and a third color filter **230_3** thereon.

[0159] Besides, various features and effects of the exemplary embodiment of FIG. **18** and the exemplary embodiment of FIG. **11** may be equally applied even to the exemplary embodiment, and the duplicated description will be omitted.

[0160] Next, referring to FIG. **20**, the thin film transistor panel **100** according to the exemplary embodiment is almost the same as that of the exemplary embodiment illustrated in FIG. **18**, but positions of the capping layers **80** may be different from each other. For example, as illustrated in FIG. **20**, the capping layer **80** is positioned below the transparent filter **330** and the transparent spacing member **350**, and may be positioned on the color filter **230** and the first passivation layer **180***a*. The capping layer **80** may prevent the color filter **230** therebelow from being lifted and suppress the contamination of the liquid crystal layer **3** due to an organic material such as a solvent flowing into from the color filter **230**, thereby preventing defects such as an afterimage which may be caused when the liquid crystal display panel is driven.

[0161] As a result, the plurality of pixel electrodes **191** and shielding electrodes **199** may be positioned on the transparent filter **330**.

[0162] Next, FIG. **21** shows an example in which the opposed panel according to the exemplary embodiment is almost the same as that of the exemplary embodiment illustrated in FIG. **20**, but three color filters **230** having different colors overlap with each other to form the overlapping portion OP. That is, the overlapping portion OP may include a first color filter **230_1**, a second color filter **230_2** thereon, and a third color filter **230_3** thereon.

[0163] Besides, various features and effects of the exemplary embodiment of FIG. **20** and the exemplary embodiment of FIG. **11** may be equally applied even to the exemplary embodiment, and the duplicated description will be omitted.

[0164] Next, referring to FIG. **22**, the thin film transistor panel **100** according to the exemplary embodiment is almost the same as that of the exemplary embodiment illustrated in FIG. **18**, but may further include a second passivation layer **180***b* positioned between the color filter **230** and the transparent filter **330**. The second passivation layer **180***b* may be made of an organic insulating material, an inorganic insulating material such as SiOC, a compound of the organic insulating material and the inorganic insulating material, or the like. A dielectric constant of the second passivation layer **180***b* may be 3.5 or less, but is not limited thereto.

[0165] In the exemplary embodiment, the capping layer **80** may be omitted.

[0166] Besides, various features and effects of the exemplary embodiment of FIGS. **18** and **14** may be equally applied even to the exemplary embodiment, and the duplicated description will be omitted.

[0167] Next, FIG. **23** illustrates an example in which the thin film transistor panel **100** according to the exemplary embodiment is almost the same as that of the exemplary embodiment illustrated in FIG. **22**, but three color filters **230** having different colors overlap with each other to form an overlapping portion OP. That is, the overlapping portion OP may include a first color filter **230_1**, a second color filter **230_2** thereon, and a third color filter **230_3** thereon.

[0168] Besides, various features and effects of the exemplary embodiment of FIGS. **22** and **11** may be equally applied even to the exemplary embodiment, and the duplicated description will be omitted.

[0169] Next, referring to FIG. **24**, the thin film transistor panel **100** according to the exemplary embodiment is almost the same as that of the exemplary embodiment illustrated in FIG. **22**, but positions of the capping layers **80** may be different from each other. For example, as illustrated in FIG. **24**, the capping layer **80** is positioned below the second passivation layer **180***b*, and may be positioned on the color filter **230** and the first passivation layer **180***a*. The capping layer **80** may

prevent the color filter **230** therebelow from being lifted and suppress the contamination of the liquid crystal layer **3** due to an organic material such as a solvent flowing into from the color filter **230**, thereby preventing defects such as an after-image which may be caused when the liquid crystal display panel is driven.

[0170] As a result, the plurality of pixel electrodes **191** and shielding electrodes **199** may be positioned on the transparent filter **330** and the second passivation layer **180***b*.

[0171] Next, FIG. **25** illustrates an example in which the thin film transistor panel **100** according to the exemplary embodiment is almost the same as that of the exemplary embodiment illustrated in FIG. **24**, but three color filters **230** having different colors overlap with each other to form an overlapping portion OP. That is, the overlapping portion OP may include a first color filter **230_1**, a second color filter **230_2** thereon, and a third color filter **230_3** thereon.

[0172] Besides, various features and effects of the exemplary embodiment of FIGS. **24** and **11** may be equally applied even to the exemplary embodiment, and the duplicated description will be omitted.

[0173] Next, FIG. **26** illustrates an example in which the thin film transistor panel **100** according to the exemplary embodiment is almost the same as that of the exemplary embodiment illustrated in FIG. **18**, but the upper surface of the overlapping portion OP is lower than the upper surface of the transparent spacing member **350**. In this case, the overlapping portion OP forms the sub spacer CS_S together with the overcoat layer **80** thereon and the like, and the transparent spacing member **350** may form the main spacer CS_M. Unlike this, when the upper surface of the overlapping portion OP and the upper surface of the transparent spacing member **350** are substantially the same as each other, the overlapping portion OP and the transparent spacing member **350** may serve as the same spacer CS.

[0174] Next, FIG. **27** illustrates an example in which the opposed panel according to the exemplary embodiment is almost the same as that of the exemplary embodiment illustrated in FIG. **26**, but three color filters **230** having different colors overlap with each other to form the overlapping portion OP. That is, the overlapping portion OP may include a first color filter **230_1**, a second color filter **230_2** thereon, and a third color filter **230_3** thereon.

[0175] Besides, various features and effects of the exemplary embodiment of FIG. **26** and the exemplary embodiment of FIG. **11** may be equally applied even to the exemplary embodiment, and the duplicated description will be omitted.

[0176] Next, referring to FIG. **28**, the thin film transistor panel **100** according to the exemplary embodiment is almost the same as that of the exemplary embodiment illustrated in FIG. **26**, but positions of the capping layers **80** may be different from each other. For example, as illustrated in FIG. **28**, the capping layer **80** is positioned below the transparent filter **330** and the transparent spacing member **350**, and may be positioned on the color filter **230** and the first passivation layer **180***a*. As a result, the plurality of pixel electrodes **191** and shielding electrodes **199** may be positioned on the transparent filter **330**.

[0177] Next, FIG. **29** illustrates an example in which the opposed panel according to the exemplary embodiment is almost the same as that of the exemplary embodiment illustrated in FIG. **28**, but three color filters **230** having different colors overlap with each other to form the overlapping portion OP. That is, the overlapping portion OP may include a first color filter **230_1**, a second color filter **230_2** thereon, and a third color filter **230_3** thereon.

[0178] Besides, various features and effects of the exemplary embodiment of FIG. **28** and the exemplary embodiment of FIG. **11** may be equally applied even to the exemplary embodiment, and the duplicated description will be omitted.

[0179] Next, referring to FIG. **30**, the thin film transistor panel **100** according to the exemplary embodiment is almost the same as that of the exemplary embodiment illustrated in FIG. **26**, but may further include a second passivation layer **180***b* positioned between the color filter **230** and the transparent filter **330**. In the exemplary embodiment, the capping layer **80** may be omitted.

[0180] Besides, various features and effects of the exemplary embodiment of FIGS. **26** and **14** may be equally applied even to the exemplary embodiment, and the duplicated description will be omitted.

[0181] Next, FIG. **31** illustrates an example in which the thin film transistor panel **100** according to the exemplary embodiment is almost the same as that of the exemplary embodiment illustrated in FIG. **30**, but three color filters **230** having different colors overlap with each other to form an overlapping portion OP. That is, the overlapping portion OP may include a first color filter **230_1**, a second color filter **230_2** thereon, and a third color filter **230_3** thereon.

[0182] Next, referring to FIG. **32**, the thin film transistor panel **100** according to the exemplary embodiment is almost the same as that of the exemplary embodiment illustrated in FIG. **30**, but positions of the capping layers **80** may be different from each other. For example, as illustrated in FIG. **32**, the capping layer **80** is positioned below the second passivation layer **180***b*, and may be positioned on the color filter **230** and the first passivation layer **180***a*. As a result, the plurality of pixel electrodes **191** and shielding electrodes **199** may be positioned on the transparent filter **330** and the second passivation layer **180***b*.

[0183] Next, FIG. **33** illustrates an example in which the thin film transistor panel **100** according to the exemplary embodiment is almost the same as that of the exemplary embodiment illustrated in FIG. **32**, but three color filters **230** having different colors overlap with each other to form an overlapping portion OP. That is, the overlapping portion OP may include a first color filter **230_1**, a second color filter **230_2** thereon, and a third color filter **230_3** thereon.

[0184] Next, referring to FIGS. **34**A and **34**B, the thin film transistor panel **100** according to the exemplary embodiment is almost the same as that of the exemplary embodiment illustrated in FIG. **14**, but the transparent filter **330** and the transparent spacing member **350** are not formed. That is, in the white pixel PX_W, a separate transparent filter is not formed and a separate spacer for maintaining the cell gap is not formed. Accordingly, the photolithography process for forming the transparent filter and the transparent spacing member may be omitted, and as a result, the manufacturing process is more simplified. Instead, the upper surface of the overlapping portion OP formed when at least two of the different color filters **230** overlap with each other is formed to be higher than the periphery to serve as the spacer CS maintaining the cell gap together with the overlapping portion OP, the second passivation layer **180***b* thereon, the capping layer **80**, and the like.

[0185] The transmitting area of the white pixel PX_W may be almost filled by the second passivation layer **180***b*. Accordingly, the thickness of the second passivation layer **180***b*

positioned in the transmitting area of the white pixel PX_W may be substantially the same as or larger than the thickness of the color filter **230** positioned in the transmitting area of the color pixels PX_**1**, PX_**2**, and PX_**3**. Further, the thickness of the second passivation layer **180***b* positioned in the transmitting area of the white pixel PX_W may be larger than the second passivation layer **180***b* positioned on the color filters **230** of the color pixels PX_**1**, PX_**2**, and PX_**3**. Accordingly, the height of the upper surface of the second passivation layer **180***b* in the white pixel PX_W may be the same as or larger than the height of the upper surface of the color filter **230** positioned in the transmitting area of the color pixels PX_**1**, PX_**2**, and PX_**3**.

[0186] Since the upper surface of the second passivation layer **180***b* in the white pixel PX_W sags below the upper surface of the second passivation layer **180***b* in the color pixels PX_**1**, PX_**2**, and PX_**3**, the second passivation layer **180***b* may include a high-flatness organic material having sufficient viscosity so as to prevent the cell gap of the white pixel PX_W from being different from the cell gap of the color pixels PX_**1**, PX_**2**, and PX_**3**.

[0187] Next, FIG. **35** illustrates an example in which the thin film transistor panel **100** according to the exemplary embodiment is almost the same as that of the exemplary embodiment illustrated in FIGS. **34**A and **34**B, but three color filters **230** having different colors overlap with each other to form an overlapping portion OP. That is, the overlapping portion OP may include a first color filter **230_1**, a second color filter **230_2** thereon, and a third color filter **230_3** thereon.

[0188] Next, referring to FIG. **36**, the thin film transistor panel **100** according to the exemplary embodiment is almost the same as that of the exemplary embodiment illustrated in FIGS. **34**A and **34**B, but positions of the capping layers **80** may be different from each other. For example, as illustrated in FIG. **36**, the capping layer **80** is positioned below the second passivation layer **180***b*, and may be positioned on the second color filter **230_2** of the overlapping portion and the first passivation layer **180***a*. As a result, a plurality of pixel electrodes **191** and shielding electrodes **199** may be positioned on the second passivation layer **180***b*.

[0189] Next, FIG. **37** illustrates an example in which the opposed panel according to the exemplary embodiment is almost the same as that of the exemplary embodiment illustrated in FIG. **36**, but three color filters **230** having different colors overlap with each other to form the overlapping portion OP. That is, the overlapping portion OP may include a first color filter **230_1**, a second color filter **230_2** thereon, and a third color filter **230_3** thereon.

[0190] Next, a liquid crystal display panel according to an exemplary embodiment will be described with reference to FIGS. **38** to **44**. The same constituent elements as the exemplary embodiments described above designate the same reference numerals, and the duplicated description is omitted, but differences will be mainly described.

[0191] FIG. **38** is a layout view of three adjacent pixels of a liquid crystal display panel according to still another exemplary embodiment, and FIGS. **39** to **44** are cross-sectional views illustrating the liquid crystal display panel illustrated in FIG. **38** taken along line XXXIX-XXXIX, respectively.

[0192] The liquid crystal display panel according to the exemplary embodiment is almost the same as those of the exemplary embodiments described above, but positions, structures, and the like of the color filters **230** may be different from each other.

[0193] Referring to FIG. **38**, transmitting areas of color pixels PX_**1** PX_**2**, and PX_**3** and a white pixel PX_W may be defined by openings of the light blocking member **220**. According to the exemplary embodiment, the color filter **230** is positioned in the transmitting area of the white pixel PX_W. The color filter **230** positioned in the transmitting area of the white pixel PX_W is distinguished from the color filters **230** positioned in the color pixels PX_**1** PX_**2**, and PX_**3** to be called color filters in white **230_W1**, **230_W2**, and **230_W3**. FIG. **38** illustrates an example in which three different color filters **230_W1**, **230_W2**, **230_W3** are positioned in one white pixel PX_W, but is not limited thereto, and two different color filters may be positioned.

[0194] A planar shape and a cross-sectional structure of the color filters in white **230_W1**, **230_W2**, and **230_W3** may be variously set. Referring to FIG. **38**, the color filters in white **230_W1**, **230_W2**, and **230_W3** according to the exemplary embodiment include portions which do not overlap with each other and are elongated in a horizontal direction or a vertical direction, and portions of which at least parts overlap with each other. Particularly, the elongated direction in each of the color filters in white **230_W1**, **230_W2**, and **230_W3** may not be parallel to an extending direction of a long side of the white pixel PX_W. That is, as illustrated in FIG. **38**, when the white pixel PX_W is longer in the vertical direction than the horizontal direction, the extending direction of each of the color filters in white **230_W1**, **230_W2**, and **230_W3** may be substantially in a horizontal direction. Further, elongated directions of the plurality of color filters in white **230_W1**, **230_W2**, and **230_W3** may be parallel to each other.

[0195] A portion where at least two of the plurality of color filters in white **230_W1**, **230_W2**, and **230_W3** positioned in one white pixel PX_W overlap with each other is similar to the overlapping portion of the liquid crystal display panel according to the exemplary embodiments described above.

[0196] An example in which the color filter **230** and the light blocking member **220** are positioned on the opposed panel **200** will be first described with reference to FIGS. **38** to **40**.

[0197] The light blocking member **220** including an opening is positioned on the substrate **210**, and a plurality of color filters **230** is positioned thereon. As described above, at least two color filters **230** are formed in the transmitting area of the white pixel PX_W to configure the color filters in white **230_W1**, **230_W2**, and **230_W3**. The portion where at least two of the color filters in white **230_W1**, **230_W2**, and **230_W3** overlap with each other is distinguished from the overlapping portion of the above exemplary embodiment to be called an overlapping portion in white WOP. The lowest color filter of the overlapping portion in white WOP is called a first color filter **230_1**, and a color filter positioned at an n-th (n is a natural number of 2 or more) position thereon is called an n-th color filter **230**_*n*. The color filters **230_1**, **230_2**, **230_3** in FIGS. **39-44** may correspond to the color filters in white **230_W1**, **230_W2**, and **230_W3**, respectively, as illustrated in FIG. **38**. Since an area, a thickness, and the like of the overlapping area of the color filters forming the overlapping portion in white WOP are the same as those described above, the detailed description will be omitted herein.

[0198] The overlapping portion in white WOP may be connected with the portions where the color filters in white **230**_

W1, 230_W2, and 230_W3 do not overlap with each other and are elongated, and as a result, the stability of the overlapping portion in white WOP may be increased.

[0199] An overcoat layer **250** is positioned on the color filter **230** and the light blocking member **220**. The flatness on the substrate **210** may be controlled by properly controlling the viscosity of the overcoat layer **250**. That is, the height of the upper surface of the overcoat layer **250** in the transmitting area of the white pixel PX_W and the height of the upper surface of the overcoat layer **250** in the transmitting area of the color pixels PX_**1**, PX_**2**, and PX_**3** may be substantially equally adjusted by properly decreasing the viscosity of the overcoat layer **250**. Particularly, since at least two of color filters in white **230**_W1, **230**_W2, and **230**_W3 are positioned in the transmitting area of the white pixel PX_W, the upper surface of the overcoat layer **250** may be prevented from being sunk in the white pixel PX_W, and as a result, the flatness may be more improved.

[0200] The overlapping portion in white WOP and the overcoat layer **250** thereon have upper surfaces higher than the periphery to form a spacer CS maintaining a cell gap of the liquid crystal layer **3**. Accordingly, a separate spacer needs not to be formed to reduce the number of photomasks.

[0201] An opposed electrode **270** is positioned on the overcoat layer **250**. The opposed electrode **270** may be patterned, and may not be formed on the overlapping portion in white WOP forming the spacer.

[0202] The exemplary embodiment illustrated in FIG. **40** is almost the same as the exemplary embodiment illustrated in FIG. **39**, but a spacing member **370** is further positioned on the overlapping portion in white WOP. The overlapping portion in white WOP, the overcoat layer **250** thereon, and the spacing member **370** have upper surfaces higher than the periphery to form the spacer CS. Particularly, in the case of forming the spacer CS illustrated in FIG. **39** together, since the height of the spacer CS illustrated in FIG. **40** where the spacing member **370** is positioned is relatively large, the spacer CS illustrated in FIG. **40** serves as the main spacer, and the spacer CS illustrated in FIG. **39** may serve as the sub spacer.

[0203] According to the exemplary embodiment, since the color filters in white **230**_W1, **230**_W2, and **230**_W3 are positioned in the white pixel PX_W, a color coordinate of the white pixel PX_W is easily controlled by controlling an area and the like of the color filters in white **230**_W1, **230**_W2, and **230**_W3.

[0204] Next, an example in which the color filter **230** is positioned on the thin film transistor panel **100** will be described with reference to FIGS. **41** to **44**. In this case, the light blocking member **220** may be positioned at any one of the thin film transistor panel **100** or the opposed panel **200**.

[0205] A gate conductor (not illustrated), a gate insulating layer **140**, and a semiconductor layer (not illustrated) are sequentially positioned on the substrate **110** of the thin film transistor panel **100**, and a data conductor including a data line **171** is positioned thereon. The data line **171** may be almost extended between the adjacent pixels, but is not limited thereto.

[0206] A first passivation layer **180***a* is positioned on the data conductor.

[0207] A plurality of color filters **230** is positioned on the first passivation layer **180***a*. As described above, at least two color filters **230** are formed in the transmitting area of the white pixel PX_W to configure the color filters in white **230**_W1, **230**_W2, and **230**_W3. The portion where at least two of the color filters in white **230**_W1, **230**_W2, and **230**_W3 overlap with each other is called an overlapping portion in white WOP. The lowest color filter of the overlapping portion in white WOP is called a first color filter **230**_**1**, and a color filter positioned at an n-th (n is a natural number of 2 or more) position thereon is called an n-th color filter **230**_*n*. Since an area, a thickness, and the like of the overlapping area of the color filters **230** forming the overlapping portion in white WOP are the same as those described above, the detailed description will be omitted herein.

[0208] Even in the exemplary embodiment, the overlapping portion in white WOP may be connected with the portions where the color filters in white **230**_W1, **230**_W2, and **230**_W3 do not overlap with each other and are elongated, and as a result, the stability of the overlapping portion in white WOP may be increased.

[0209] A second passivation layer **180***b* including an organic material may be positioned on the color filters **230**. The viscosity of the second passivation layer **180***b* is properly controlled to control the flatness of the substrate **110**. Particularly, according to the exemplary embodiment, since the color filters in white **230**_W1, **230**_W2, and **230**_W3 are formed in the transmitting area of the white pixel PX_W, the upper surface of the second passivation layer **180***b* is not sunken in the transmitting area of the white pixel PX_W where a separate white filter is not formed. That is, the height of the upper surface of the second passivation layer **180***b* in the transmitting area of the white pixel PX_W may be substantially the same as the height of the upper surface of the second passivation layer **180***b* in the transmitting area of the color pixels PX_**1**, PX_**2**, and PX_**3**, and as a result, the flatness on the substrate **110** may be improved.

[0210] The color filters in white **230**_W1, **230**_W2, and **230**_W3 are positioned in the white pixel PX_W, a color coordinate of the white pixel PX_W is easily controlled by controlling an area and the like of the color filters in white **230**_W1, **230**_W2, and **230**_W3.

[0211] A capping layer **80** may be positioned on the second passivation layer **180***b*. Unlike this, the capping layer **80** may be omitted.

[0212] A plurality of pixel electrodes **191** is positioned on the capping layer **80**.

[0213] The overlapping portion in white WOP and the second passivation layer **180***b* thereon have upper surfaces higher than the periphery to form a spacer CS maintaining a cell gap of the liquid crystal layer **3**. Accordingly, a separate spacer needs not to be formed to reduce the number of photomasks.

[0214] Next, referring to FIG. **42**, the thin film transistor panel **100** according to the exemplary embodiment is almost the same as that of the exemplary embodiment illustrated in FIG. **41**, but positions of the capping layers **80** may be different from each other. For example, as illustrated in FIG. **42**, the capping layer **80** may be positioned on the color filter **230** and below the second passivation layer **180***b*.

[0215] Next, referring to FIG. **43**, the thin film transistor panel **100** according to the exemplary embodiment is almost the same as that of the exemplary embodiment illustrated in FIG. **42**, but a spacing member **370** may be further positioned on the overlapping portion in white WOP. The overlapping portion in white WOP, the capping layer **80** thereon, the second passivation layer **180***b*, and the spacing member **370** have upper surfaces higher than the periphery to form the

spacer CS. Particularly, in the case of forming the spacer CS illustrated in FIG. **42** together, since the height of the spacer CS illustrated in FIG. **43** where the spacing member **370** is positioned is relatively large, the spacer CS illustrated in FIG. **43** serves as the main spacer, and the spacer CS illustrated in FIG. **42** may serve as the sub spacer.

[0216] Next, referring to FIG. **44**, the thin film transistor panel **100** according to the exemplary embodiment is almost the same as that of the exemplary embodiment illustrated in FIG. **41**, but a spacing member **370** may be further positioned on the overlapping portion in white WOP. The overlapping portion in white WOP, the capping layer **80** thereon, the second passivation layer **180***b*, and the spacing member **370** have upper surfaces higher than the periphery to form the spacer CS. Particularly, in the case of forming the spacer CS illustrated in FIG. **41** together, since the height of the spacer CS illustrated in FIG. **44** where the spacing member **370** is positioned is relatively large, the spacer CS illustrated in FIG. **44** serves as the main spacer, and the spacer CS illustrated in FIG. **41** may serve as the sub spacer.

[0217] While the inventive concept has been described in connection with what is presently considered to be practical exemplary embodiments, it is to be understood that the inventive concept is not limited to the disclosed embodiments, but, on the contrary, is intended to cover various modifications and equivalent arrangements included within the spirit and scope of the appended claims.

DESCRIPTION OF SYMBOLS

[0218] **80**: Capping layer
[0219] **100**: Thin film transistor panel
[0220] **110**, **210**: Substrate
[0221] **140**: Gate insulating layer
[0222] **171**: Data line
[0223] **180***a*, **180***b*: Passivation layer
[0224] **191**: Pixel electrode
[0225] **200**: Opposed panel
[0226] **220**: Light blocking member
[0227] **230**: Color filter
[0228] **270**: Opposed electrode
[0229] **350**: Transparent spacing member
[0230] **370**: Spacing member

What is claimed is:

1. A liquid crystal display panel, comprising:
a first substrate and a second substrate facing each other;
a liquid crystal layer positioned between the first substrate and the second substrate;
a plurality of color filters positioned on the first substrate and representing different colors from each other, wherein at least two of the plurality of color filters overlap with each other on the first substrate to form an overlapping portion, and
the overlapping portion forms a first spacer;
a transparent filter positioned on the first substrate and positioned in a transmitting area of a white pixel; and
a second spacer including the same material as the transparent filter.

2. The liquid crystal display panel of claim **1**, wherein:
a thickness of a first color filter positioned at a top of the overlapping portion is about 30% to about 70% of a thickness of a second color filter positioned below the first color filter.

3. The liquid crystal display panel of claim **2**, wherein:
a first width of an overlapping region of the first color filter with the second color filter is about 20 μm to about 50 μm.

4. The liquid crystal display panel of claim **3**, wherein:
the overlapping portion further includes a third color filter positioned below the second color filter, and
a width of an overlapping region of the second color filter with the third color filter is larger than the first width.

5. The liquid crystal display panel of claim **3**, wherein:
the second spacer is positioned on the overlapping portion.

6. The liquid crystal display panel of claim **5**, wherein:
a width of the second spacer is smaller than the first width.

7. The liquid crystal display panel of claim **1**, further comprising:
a passivation layer positioned between the plurality of color filters and the transparent filter and including an organic material,
wherein a height of an upper surface of the transparent filter positioned in the transmitting area of the white pixel is substantially the same as a height of an upper surface of the passivation layer positioned in a transmitting area of a color pixel.

8. The liquid crystal display panel of claim **1**, further comprising:
a light blocking member positioned on the first substrate and overlapping with the overlapping portion.

9. The liquid crystal display panel of claim **1**, wherein:
a height of an upper surface of the first spacer is different from a height of an upper surface of the second spacer.

10. The liquid crystal display panel of claim **1**, wherein:
the overlapping portion is positioned in the transmitting area of the white pixel.

11. The liquid crystal display panel of claim **1**, wherein:
the transparent filter and the second spacer are positioned in a same layer as each other.

12. A liquid crystal display panel, comprising:
a first substrate and a second substrate facing each other;
a liquid crystal layer positioned between the first substrate and the second substrate;
a plurality of color filters positioned on the first substrate and representing different colors from each other; and
a passivation layer positioned on the first substrate and the color filters and including an organic material,
wherein at least two of the plurality of color filters overlap with each other on the first substrate to form an overlapping portion,
the overlapping portion forms a spacer,
a thickness of the passivation layer positioned in a transmitting area of a white pixel is larger than or substantially the same as a thickness of a color filter of the color filters positioned in a transmitting area of a color pixel, and
the thickness of the passivation layer positioned in the transmitting area of the white pixel is larger than a thickness of the passivation layer positioned in the transmitting area of the color pixel.

13. The liquid crystal display panel of claim **12**, wherein:
a thickness of a first color filter positioned at a top of the overlapping portion is about 30% to about 70% of a thickness of a second color filter positioned below the first color filter.

14. The liquid crystal display panel of claim **13**, wherein:
a first width of an overlapping region of the first color filter with the second color filter is about 20 μm to about 50 μm.

15. The liquid crystal display panel of claim **14**, wherein:
the overlapping portion further includes a third color filter positioned below the second color filter, and
a width of an overlapping region of the second color filter with the third color filter is larger than the first width.

16. A liquid crystal display panel, comprising:
a first substrate and a second substrate facing each other;
a liquid crystal layer positioned between the first substrate and the second substrate; and
a plurality of color filters positioned on the first substrate and representing different colors from each other,
wherein the plurality of color filters includes at least two color filters in white positioned in a transmitting area of a white pixel and representing different colors from each other, and
two or more of the at least two color filters in white overlap with each other in the transmitting area of the white pixel to form an overlapping portion in white.

17. The liquid crystal display panel of claim **16**, wherein:
a color filter in white of the at least two color filters in white includes a portion which does not overlap with another color filter in white of the at least two color filters in white and is elongated in the transmitting area of the white pixel.

18. The liquid crystal display panel of claim **17**, wherein:
elongated portions of the at least two color filters in white are substantially parallel to each other.

19. The liquid crystal display panel of claim **18**, wherein:
an elongated portion of the elongated portions is connected with the overlapping portion in white.

20. The liquid crystal display panel of claim **16**, wherein:
the overlapping portion in white forms a spacer.

21. The liquid crystal display panel of claim **20**, further comprising:
a passivation layer positioned on the plurality of color filters.

22. The liquid crystal display panel of claim **21**, wherein:
the passivation layer includes an organic material, and
wherein a height of an upper surface of the passivation layer positioned in the transmitting area of the white pixel is substantially the same as a height of an upper surface of the passivation layer positioned in a transmitting area of a color pixel.

23. The liquid crystal display panel of claim **16**, further comprising:
a spacing member positioned on the overlapping portion in white.

24. The liquid crystal display panel of claim **16**, wherein:
a thickness of a first color filter positioned at a top of the overlapping portion in white is about 30% to about 70% of a thickness of a second color filter positioned below the first color filter.

25. The liquid crystal display panel of claim **24**, wherein:
a first width of an overlapping region of the first color filter with the second color filter is about 20 μm to about 50 μm.

26. The liquid crystal display panel of claim **25**, wherein:
the overlapping portion further includes a third color filter positioned below the second color filter, and
a width of an overlapping region of the second color filter with the third color filter is larger than the first width.

27. A manufacturing method of a liquid crystal display panel, comprising:
forming a plurality of color filters representing different colors from each other on a first substrate; and
forming a transparent filter and a transparent spacing member on the first substrate through a same process,
wherein at least two of the plurality of color filters overlap with each other on the first substrate to form an overlapping portion which protrudes above the first substrate.

28. The manufacturing method of claim **27**, wherein:
a thickness of a first color filter positioned at a top of the overlapping portion is about 30% to about 70% of a thickness of a second color filter positioned below the first color filter.

29. The manufacturing method of claim **28**, wherein:
a first width of an overlapping region of the first color filter with the second color filter is about 20 μm to about 50 μm.

30. The manufacturing method of claim **29**, wherein:
the transparent spacing member is positioned on the overlapping portion.

31. The manufacturing method of claim **27**, further comprising:
forming a passivation layer including an organic material before forming the transparent filter and the transparent spacing member and after forming the plurality of color filters,
wherein a height of an upper surface of the transparent filter positioned in a transmitting area of a white pixel is substantially the same as a height of an upper surface of the passivation layer positioned in a transmitting area of a color pixel.

32. The manufacturing method of claim **27**, further comprising:
forming a light blocking member overlapping with the overlapping portion on the first substrate.

33. The manufacturing method of claim **27**, further comprising:
attaching a second substrate to the first substrate,
wherein the overlapping portion forms a first spacer.

34. The manufacturing method of claim **33**, wherein:
the transparent spacing member forms a second spacer.

35. A manufacturing method of a liquid crystal display panel, comprising:
forming a plurality of color filters representing different colors from each other on a first substrate; and
forming a passivation layer including an organic material on the first substrate,
wherein at least two of the plurality of color filters overlap with each other on the first substrate to form an overlapping portion which protrudes above the first substrate,
a thickness of the passivation layer positioned in a transmitting area of a white pixel is larger than or substantially the same as a thickness of a color filter of the color filters positioned in a transmitting area of a color pixel, and
the thickness of the passivation layer positioned in the transmitting area of the white pixel is larger than a thickness of the passivation layer positioned in the transmitting area of the color pixel.

36. The manufacturing method of claim **35**, wherein:

a thickness of a first color filter positioned at a top of the overlapping portion is about 30% to about 70% of a thickness of a second color filter positioned below the first color filter.

37. The manufacturing method of claim **36**, wherein:

a first width of an overlapping region of the first color filter with the second color filter is about 20 μm to about 50 μm.

38. A manufacturing method of a liquid crystal display panel, comprising:

forming a plurality of color filters representing different colors from each other on a first substrate,

wherein the plurality of color filters includes at least two color filters in white which are positioned in a transmitting area of a white pixel and representing different colors from each other, and

two or more of the at least two color filters in white overlap with each other in the transmitting area of the white pixel to form an overlapping portion in white.

39. The manufacturing method of claim **38**, further comprising:

attaching a second substrate to the first substrate,

wherein the overlapping portion in white forms a spacer.

40. The manufacturing method of claim **39**, further comprising:

forming a passivation layer including an organic material on the plurality of color filters.

41. The manufacturing method of claim **38**, wherein:

a thickness of a first color filter positioned at a top of the overlapping portion in white is about 30% to about 70% of a thickness of a second color filter positioned below the first color filter.

42. The manufacturing method of claim **41**, wherein:

a first width of an overlapping region of the first color filter with the second color filter is about 20 μm to about 50 μm.

* * * * *

专利名称(译)	液晶显示面板及其制造方法		
公开(公告)号	US20160033814A1	公开(公告)日	2016-02-04
申请号	US14/568525	申请日	2014-12-12
[标]申请(专利权)人(译)	三星显示有限公司		
申请(专利权)人(译)	三星DISPLAY CO.，LTD.		
当前申请(专利权)人(译)	三星DISPLAY CO.，LTD.		
[标]发明人	NA BYOUNG SUN KWAK HEE JUNE YOON SEOK KYU LIM SANG UK BAEK SEUNG SOO LEE SEONG YOUNG IM WAN SOON		
发明人	NA, BYOUNG SUN KWAK, HEE JUNE YOON, SEOK KYU LIM, SANG-UK BAEK, SEUNG SOO LEE, SEONG YOUNG IM, WAN-SOON		
IPC分类号	G02F1/1335 G02F1/1333 G02F1/1339		
CPC分类号	G02F1/133514 G02F1/133516 G02F1/1339 G02F2001/13398 G02F1/133512 G02F2001/13396 G02F1/133305 G02F1/13394 G02F2001/136222 G02F1/133345		
优先权	1020140097531 2014-07-30 KR		
其他公开文献	US9632351		
外部链接	Espacenet USPTO		

摘要(译)
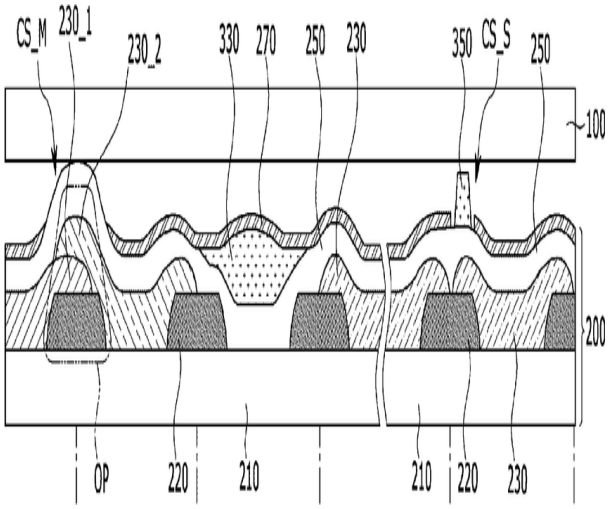
本发明提供一种液晶显示面板及其制造方法，更具体地，涉及一种包括白色像素的液晶显示面板及其制造方法。液晶显示面板包括：第一基板和第二基板，彼此面对;位于第一基板和第二基板之间的液晶层;多个滤色器，位于第一基板上并呈现彼此不同的颜色，其中多个滤色器中的至少两个在第一基板上彼此重叠以形成重叠部分，并且重叠部分形成第一滤色器间隔;透明滤光器，位于第一基板上，位于白色像素的透射区域;第二隔离物包括与透明过滤器相同的材料。