US 20140098315A1

(19) United States

(12) Patent Application Publication

JUNG et al.

(10) Pub. No.: US 2014/0098315 A1

(43) Pub. Date: Apr. 10, 2014

(54) LIQUID CRYSTAL DISPLAY

(71) Applicant: **SAMSUNG DISPLAY CO., LTD.**, Yongin-City (KR)

(72) Inventors: **Hyung Gi JUNG**, Cheonan-si (KR); **Swae-Hyun KIM**, Asan-si (KR); **Yeo Geon YOON**, Suwon-si (KR); **Sung Hee HONG**, Hwaseong-si (KR); **Hyung June KIM**, Anyang-si (KR); **Jae Hwa PARK**, Gumi-si (KR); **Young Goo SONG**, Asan-si (KR); **Sung Hoon KIM**, Seonghyeon-dong (KR)

(73) Assignee: **Samsung Display Co., Ltd.**, Yongin-City (KR)

(21) Appl. No.: **13/839,095**

(22) Filed: **Mar. 15, 2013**

(30) **Foreign Application Priority Data**

Oct. 5, 2012 (KR) 10-2012-0110866

Publication Classification

(51) **Int. Cl.**
G02F 1/1362 (2006.01)

(52) **U.S. Cl.**
CPC *G02F 1/136209* (2013.01)
USPC **349/42**; 349/106

(57) **ABSTRACT**

A liquid crystal display includes: a first insulation substrate; a gate line disposed on the first insulation substrate; a first data line and a second data line disposed on the first insulation substrate; a color filter disposed on the first insulation substrate and disposed between the first data line and the second data line; a first light blocking member disposed on the first data line and the second data line; and a second light blocking member disposed on the color filter and the first light blocking member, extending in the same direction as the gate line, and overlapping the first light blocking member on the first data line and the second data line.

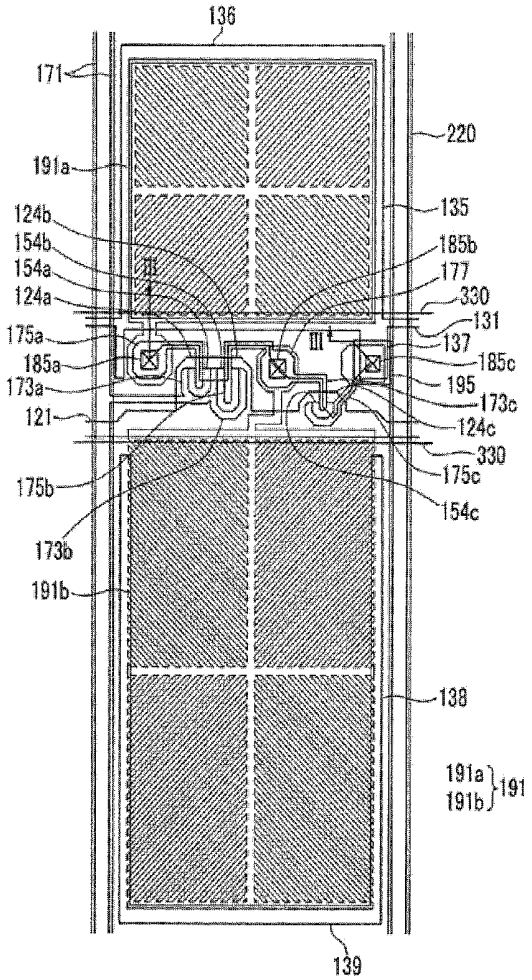

FIG.1

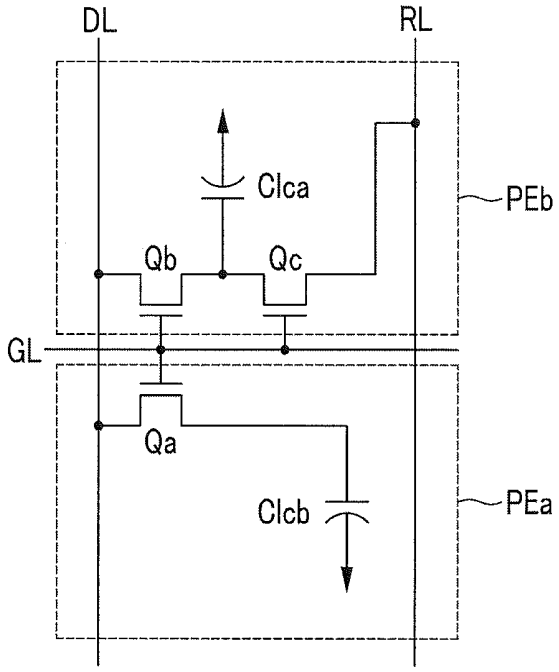

FIG.2

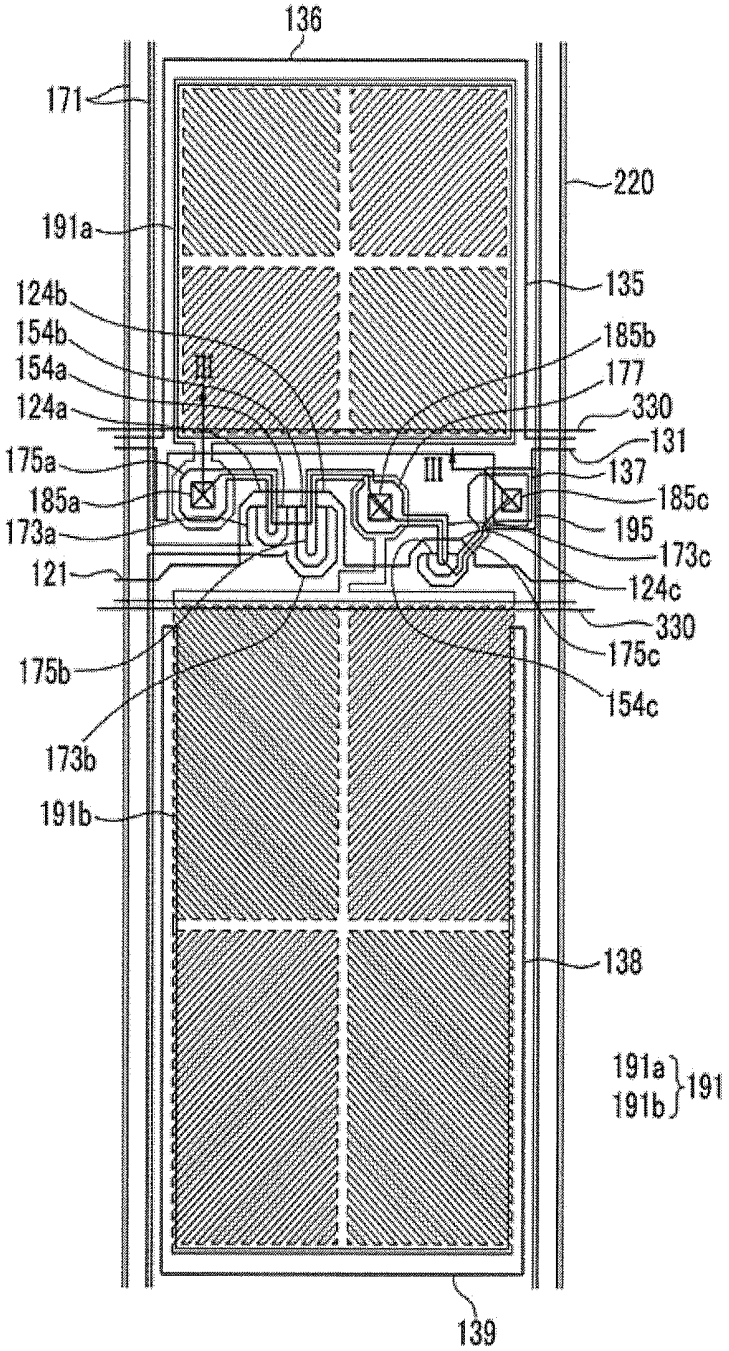
136
171
220
191a
135
124b
154b
185b
154a
177
124a
330
131
175a
137
185a
185c
173a
195
173c
121
124c
330
175c
175b
154c
173b
191b
138
191a
191b
191
139

FIG.3

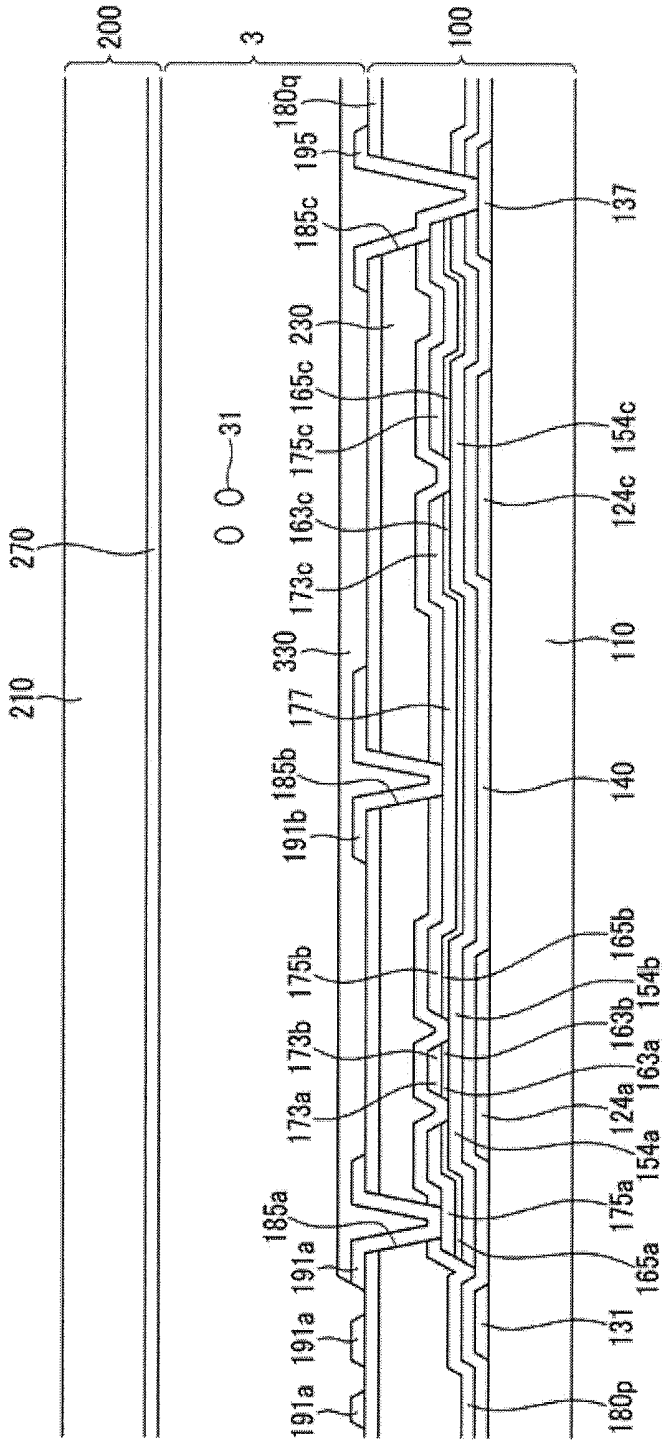
200
3
100
180q
195
185c
230
165c
175c
163c
173c
330
177
185b
191b
175b
173b
173a
185a
191a
191a
191a
270
210
31
137
154c
124c
110
140
165b
154b
163b
163a
124a
154a
175a
165a
131
180p

FIG.4

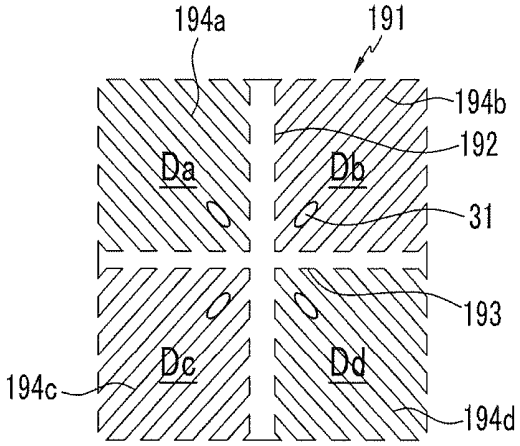

FIG.5

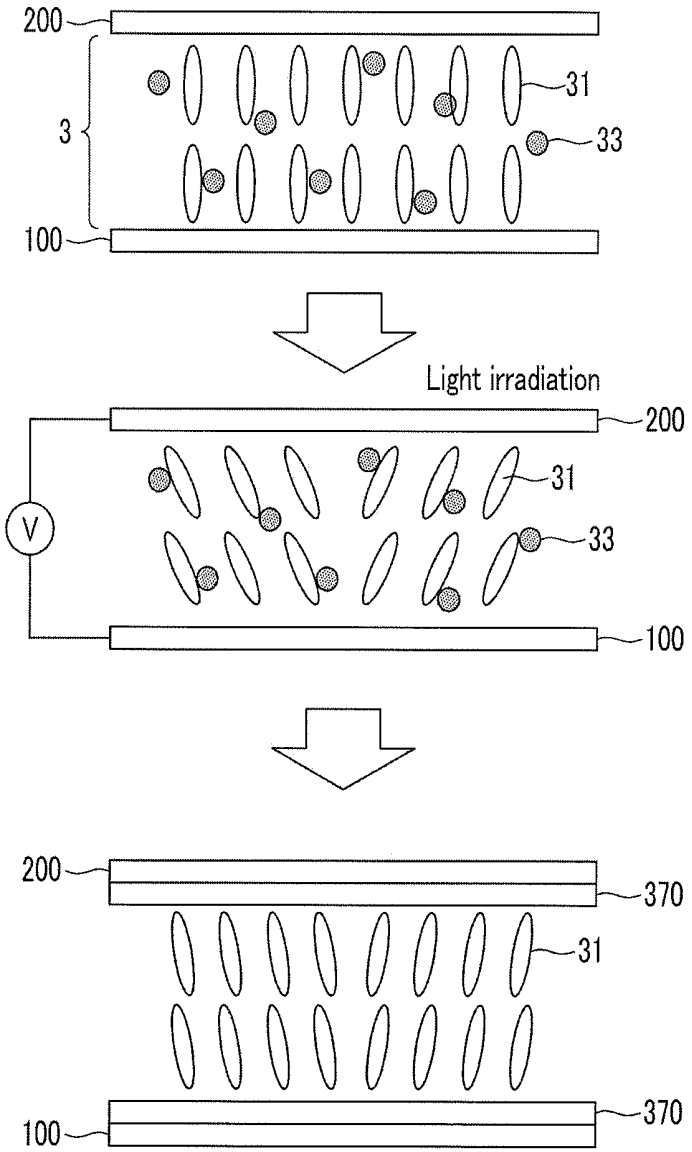
200
3
31
33
100
Light irradiation
200
V
31
33
100
200
370
31
100
370

FIG.6

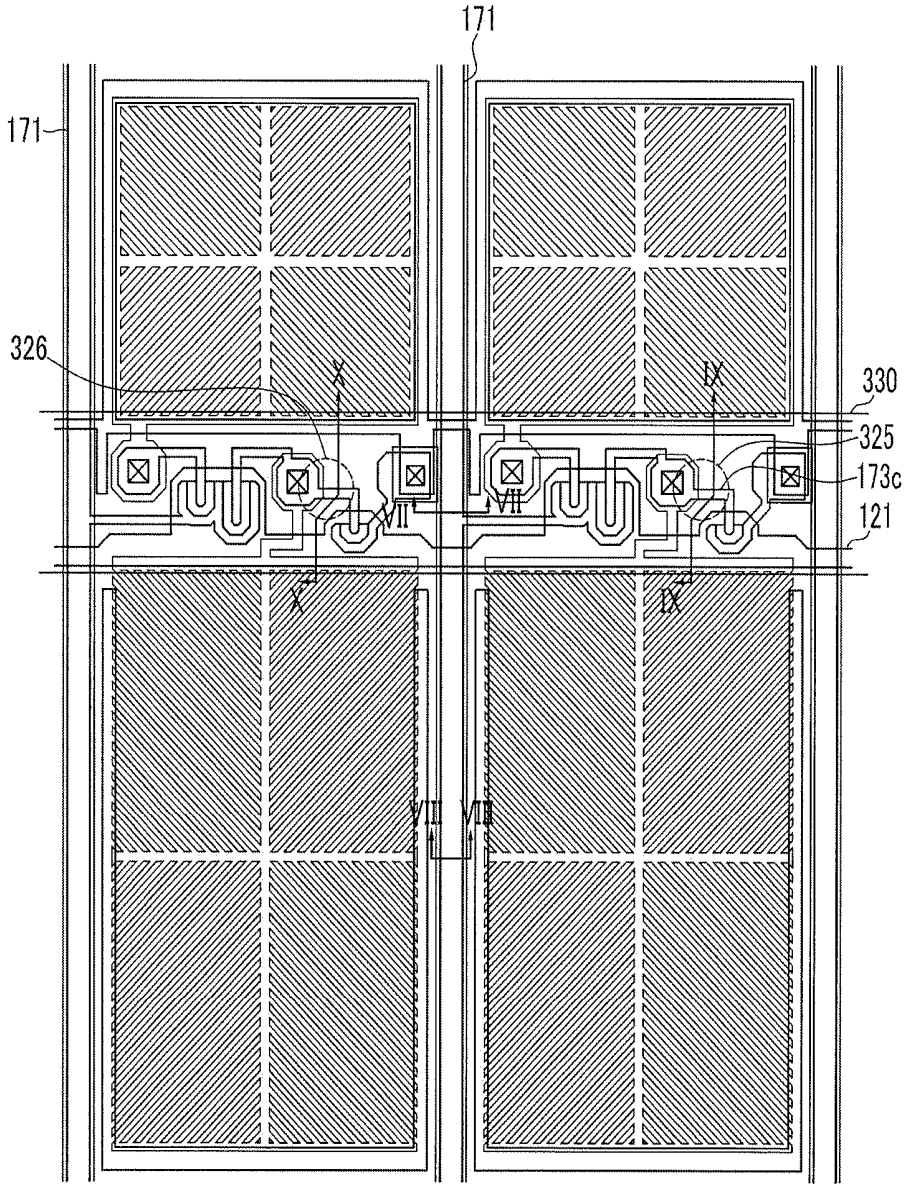

FIG.7

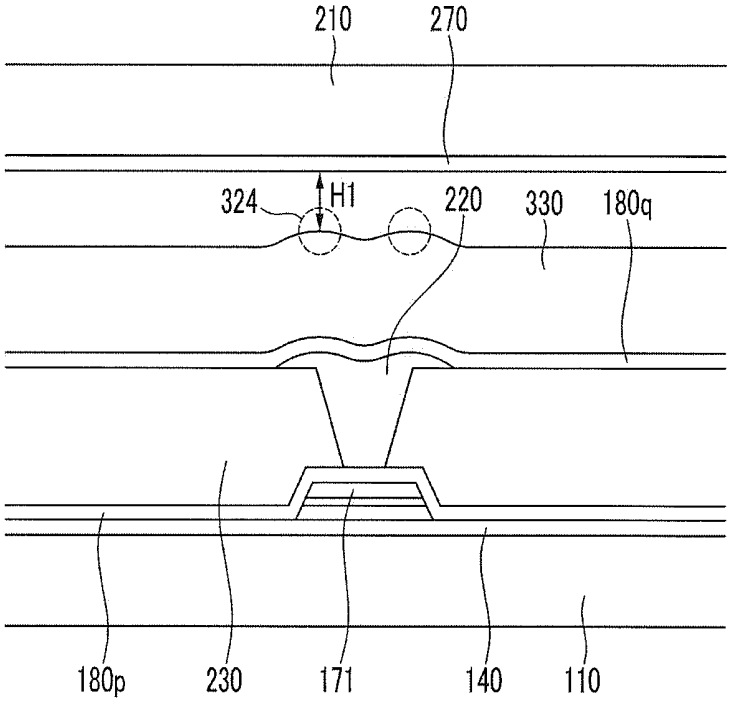

FIG.8

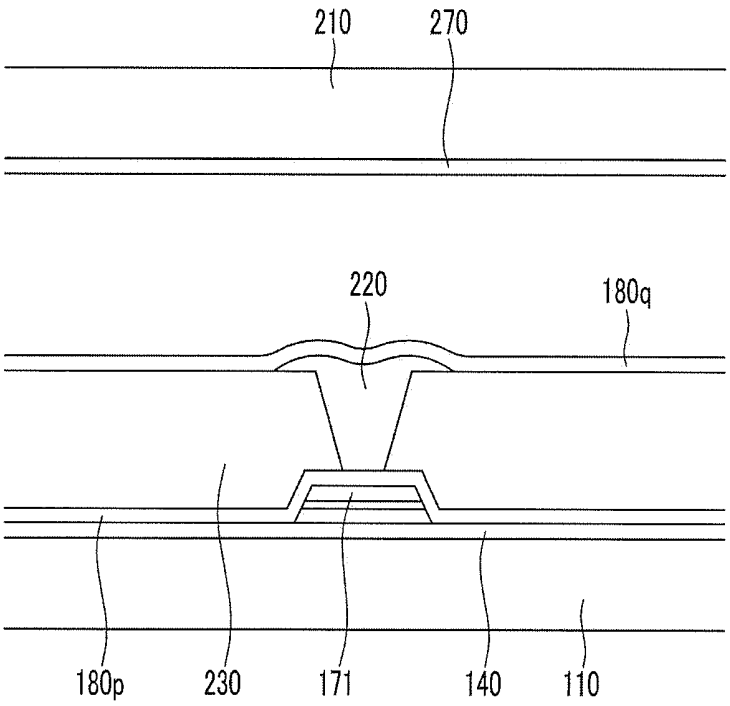

FIG.9

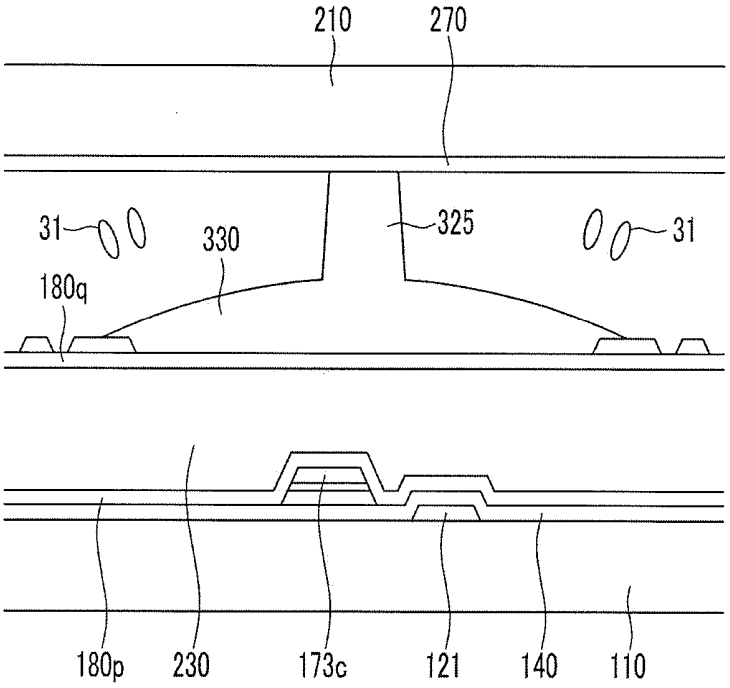

FIG.10

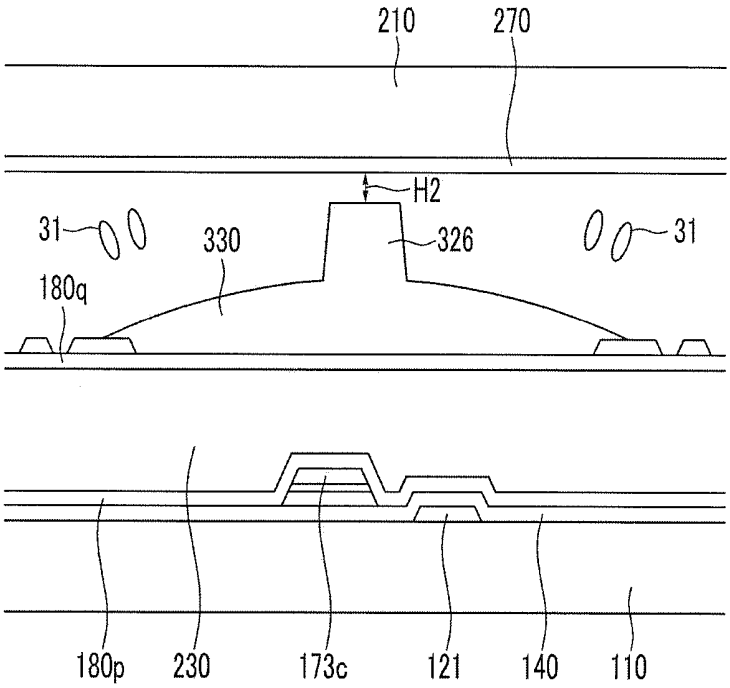

FIG.11

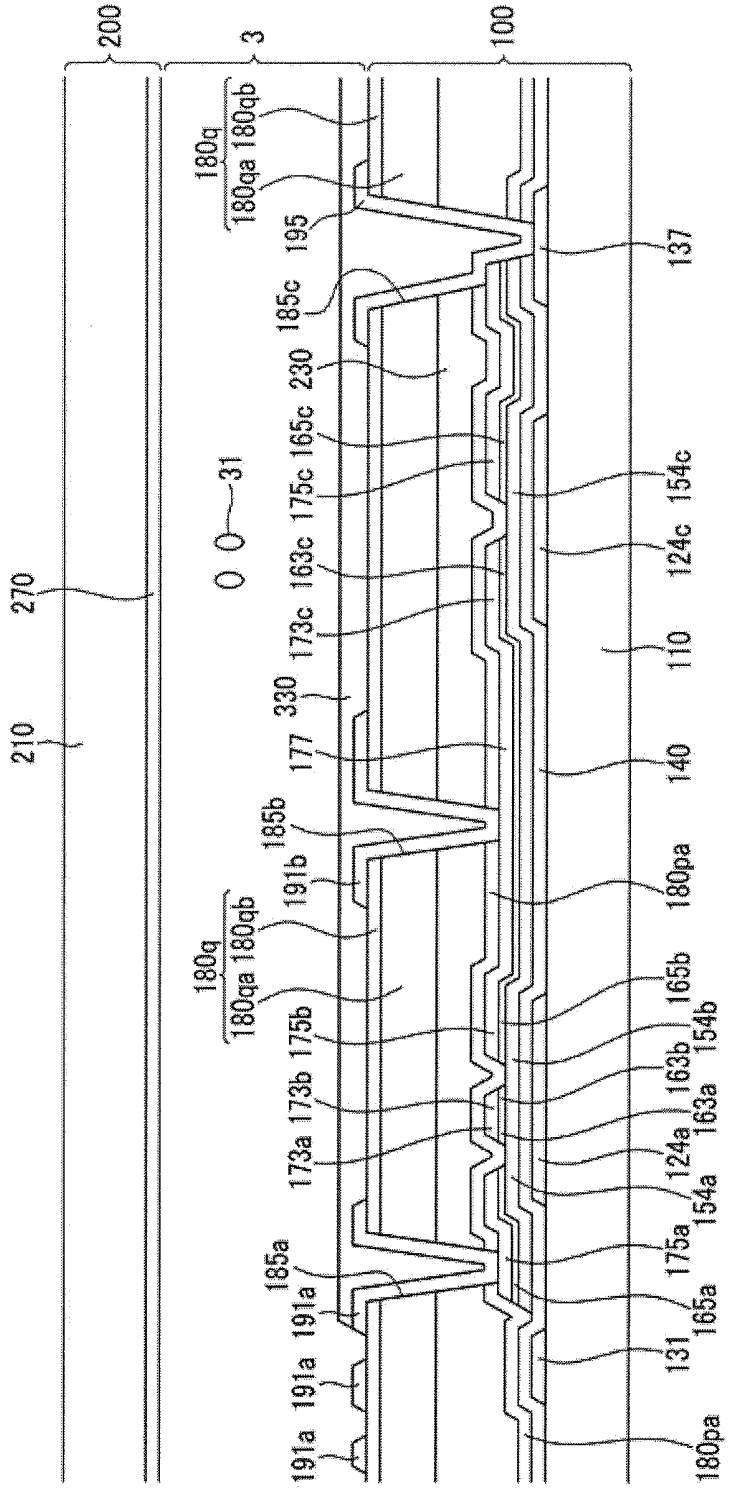
200
3
100
180q
180qa
180qb
195
185c
230
165c
175c
163c
173c
330
177
185b
191b
175b
173b
173a
185a
191a
31
270
210
137
154c
124c
110
140
180pa
165b
154b
163b
163a
124a
154a
175a
165a
131

FIG.12

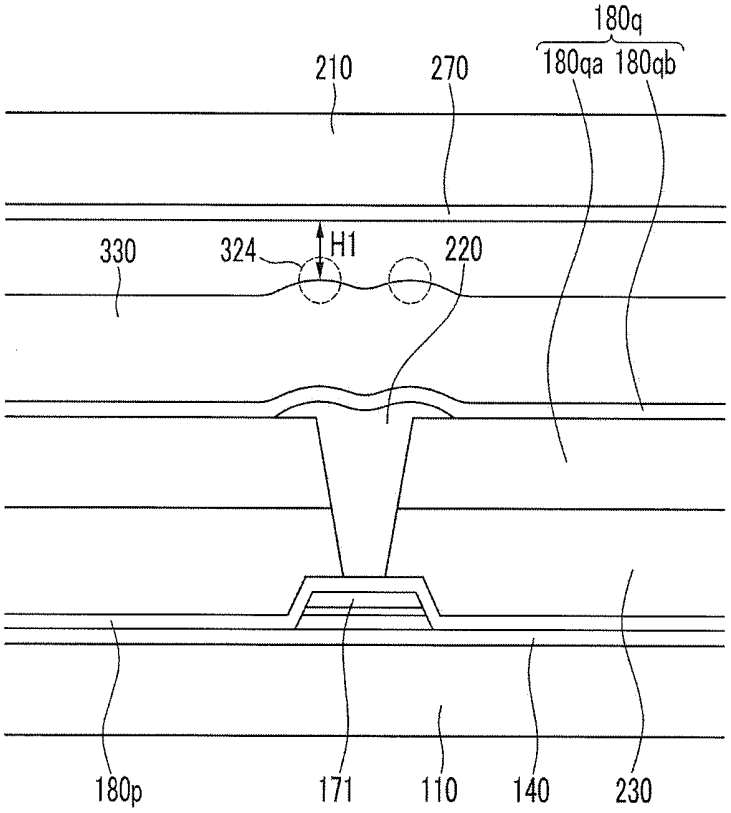

FIG.13

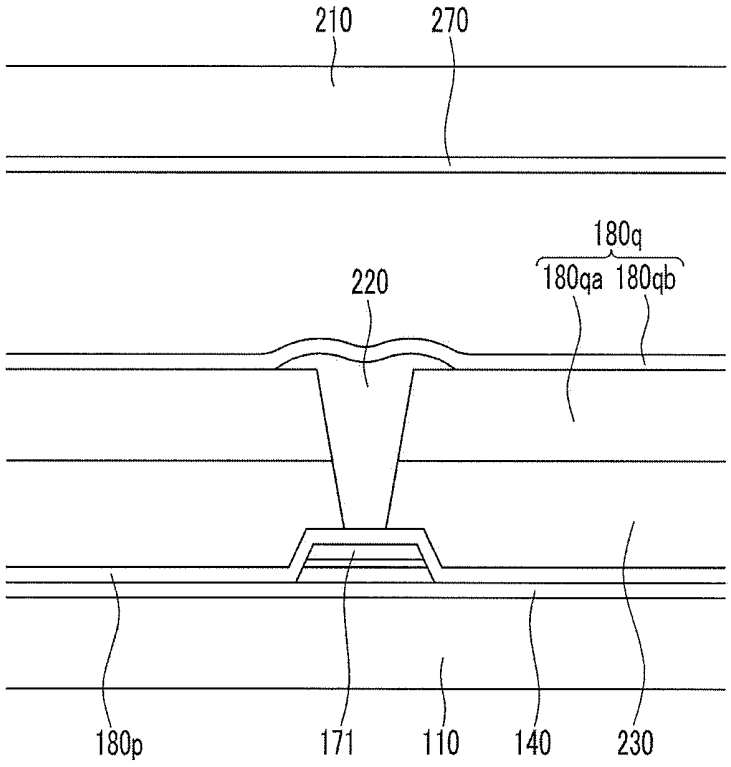

FIG.14

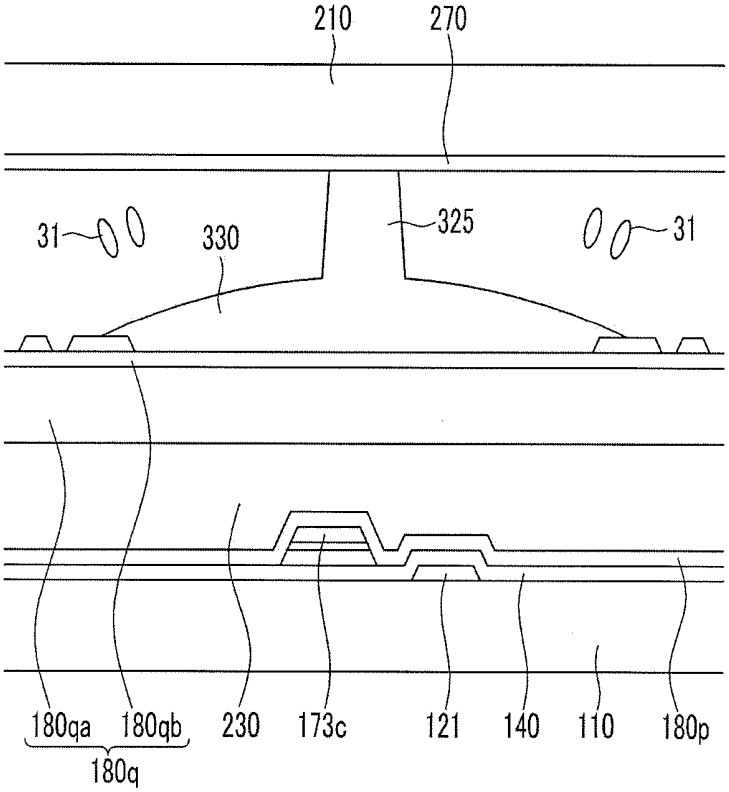
210
270
31
330
325
31
180qa
180qb
180q
230
173c
121
140
110
180p

FIG.15

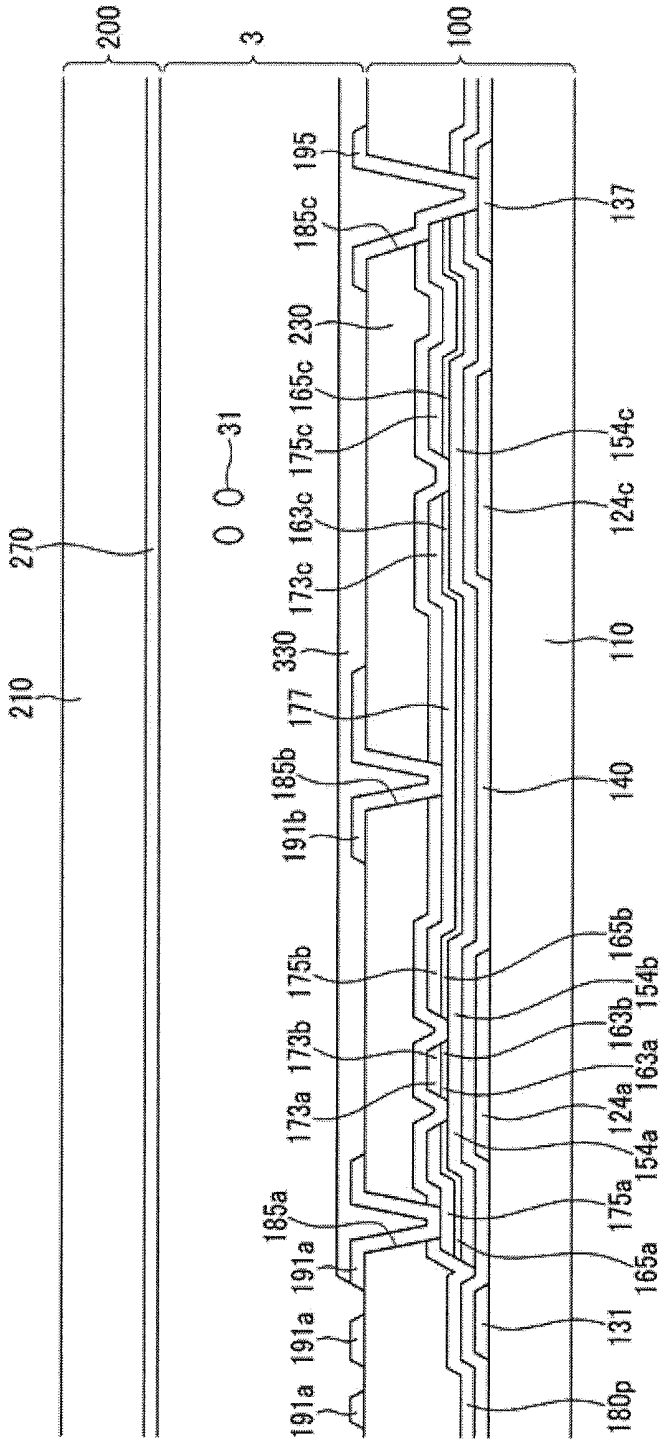
200
3
100
270
210
31
195
185c
230
165c
175c
163c
173c
330
177
185b
191b
175b
173b
173a
185a
191a
191a
191a
137
154c
124c
110
140
165b
154b
163b
163a
124a
154a
175a
165a
131
180p

FIG.16

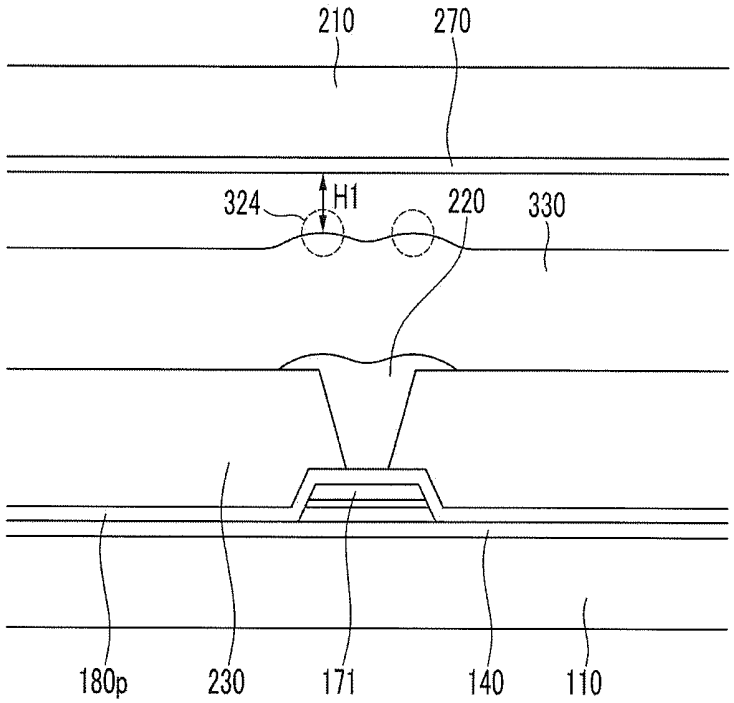

FIG.17

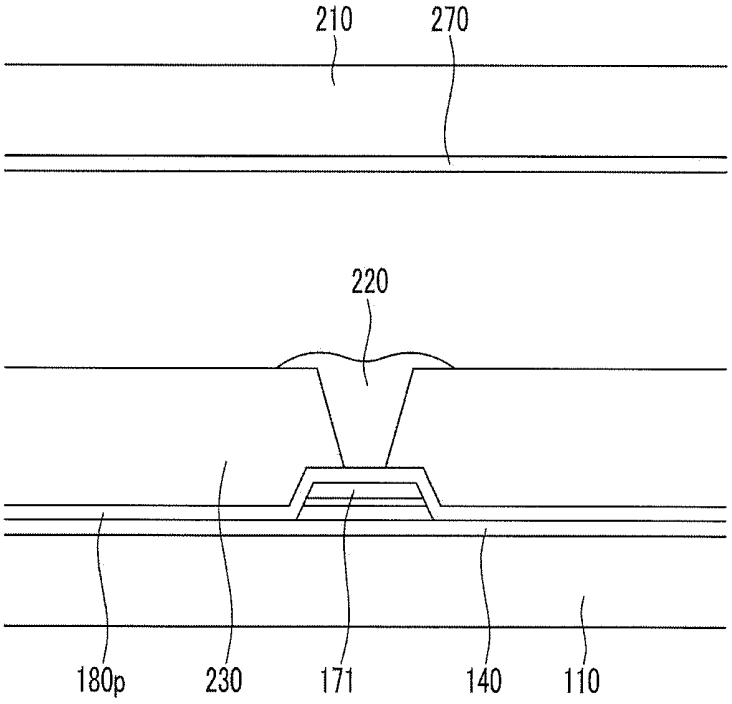

FIG.18

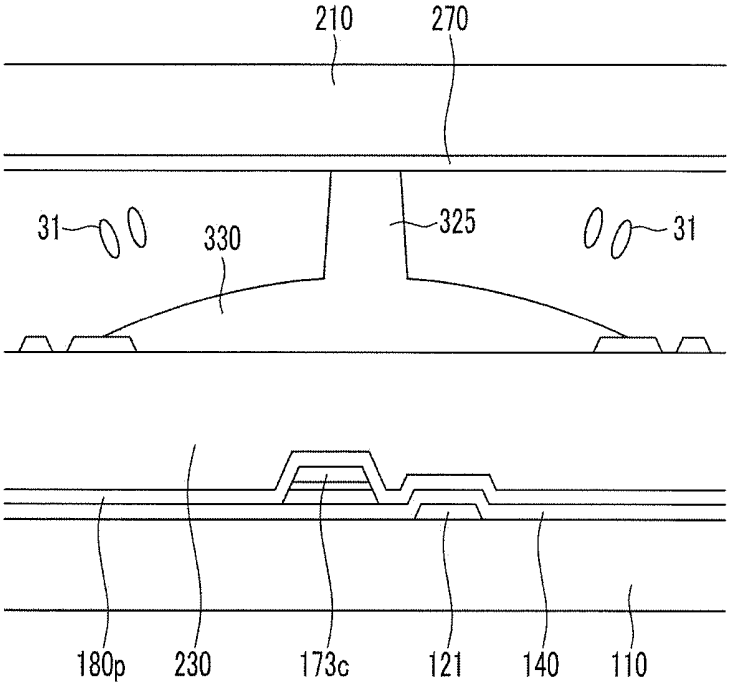

FIG.19

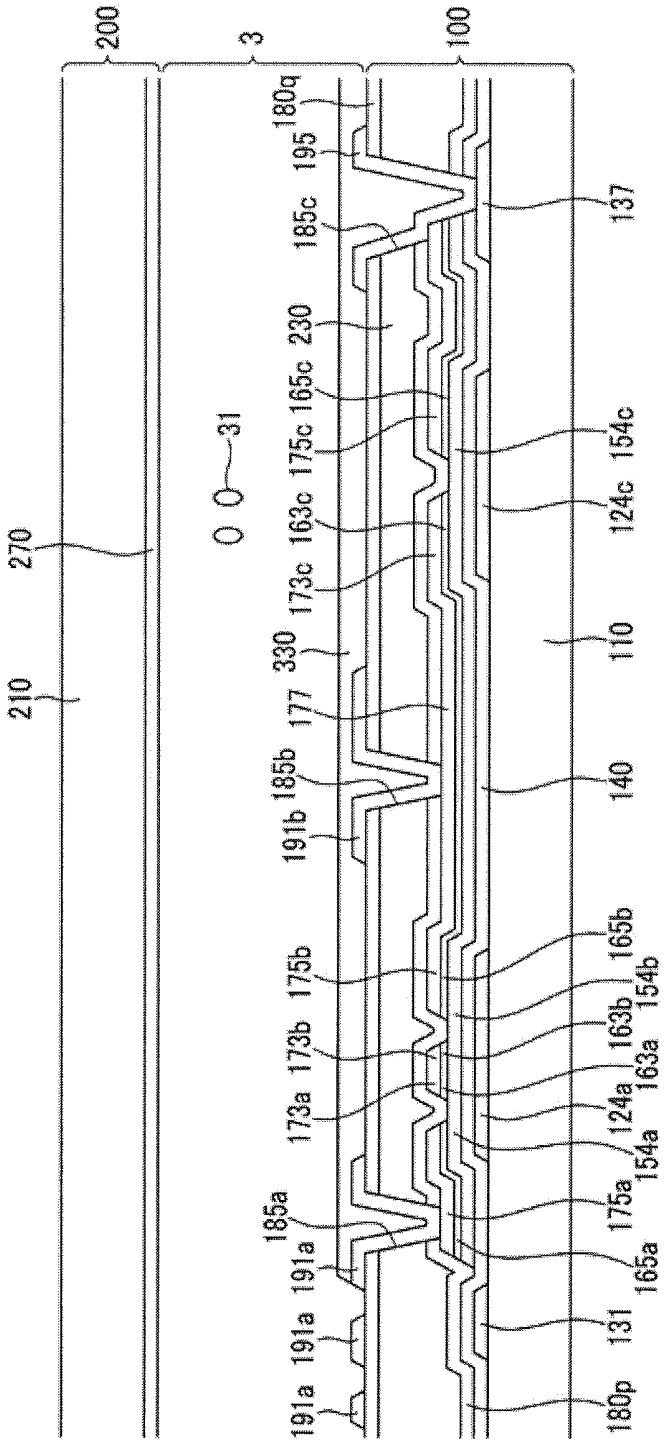
200
3
100
180q
195
185c
230
165c
175c
163c
173c
330
177
185b
191b
175b
173b
173a
185a
191a
191a
191a
31
270
210
137
154c
124c
110
140
165b
154b
163b
163a
124a
154a
175a
165a
131
180p

FIG.20

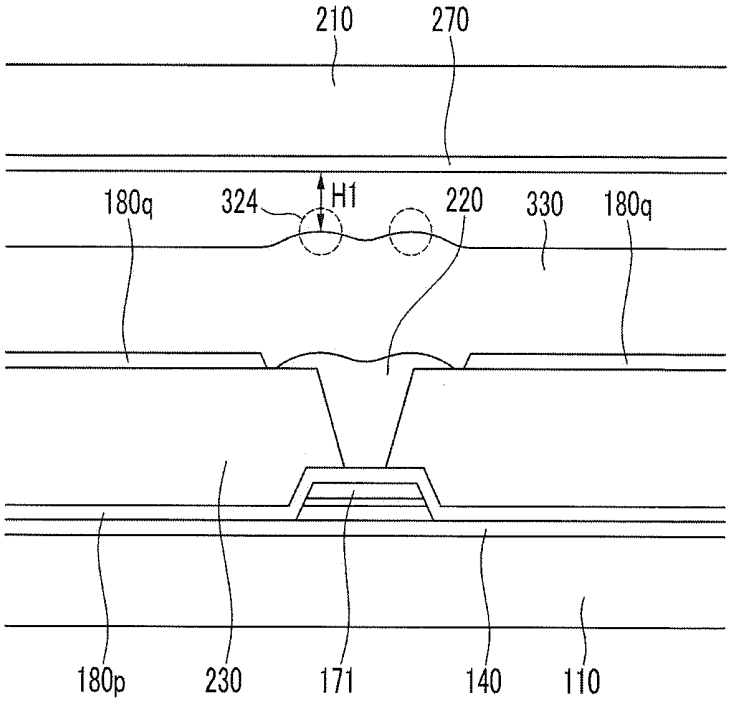

FIG.21

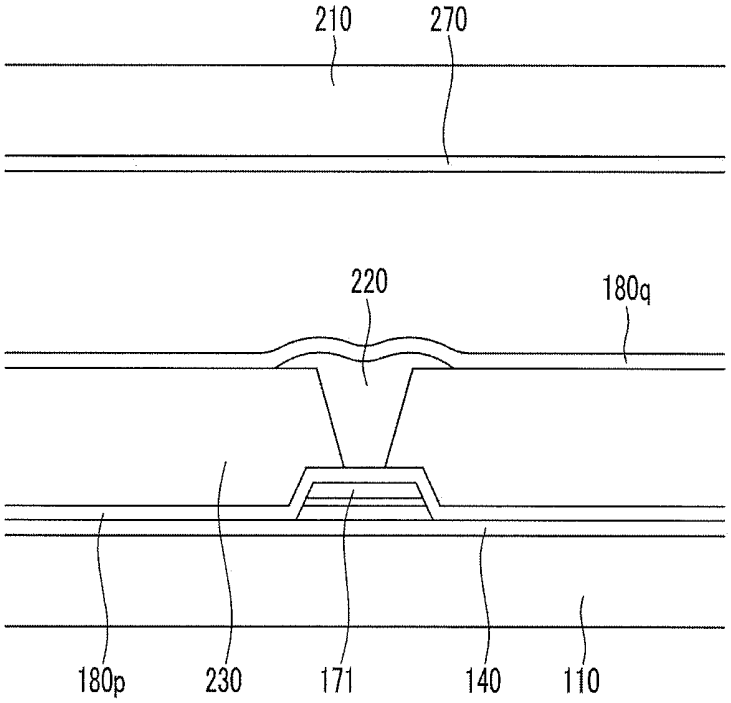

FIG.22

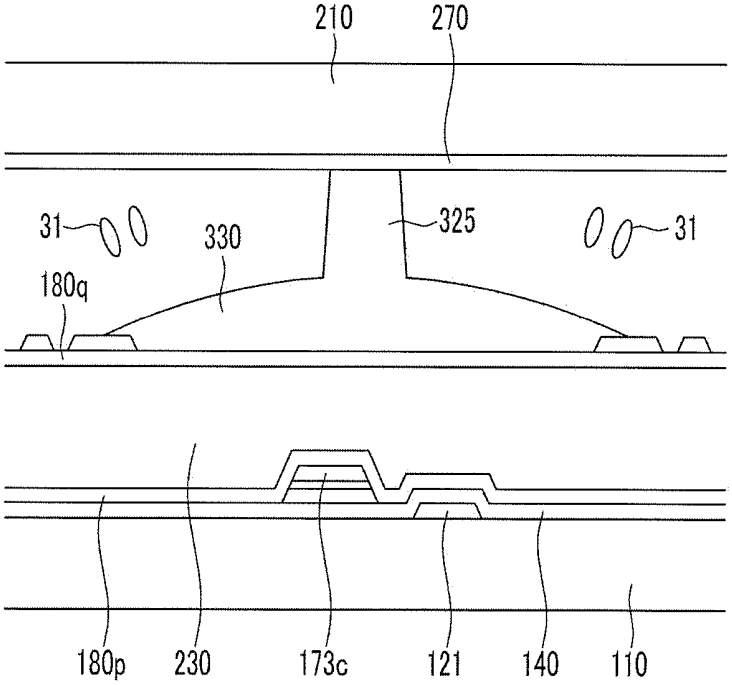

FIG.23

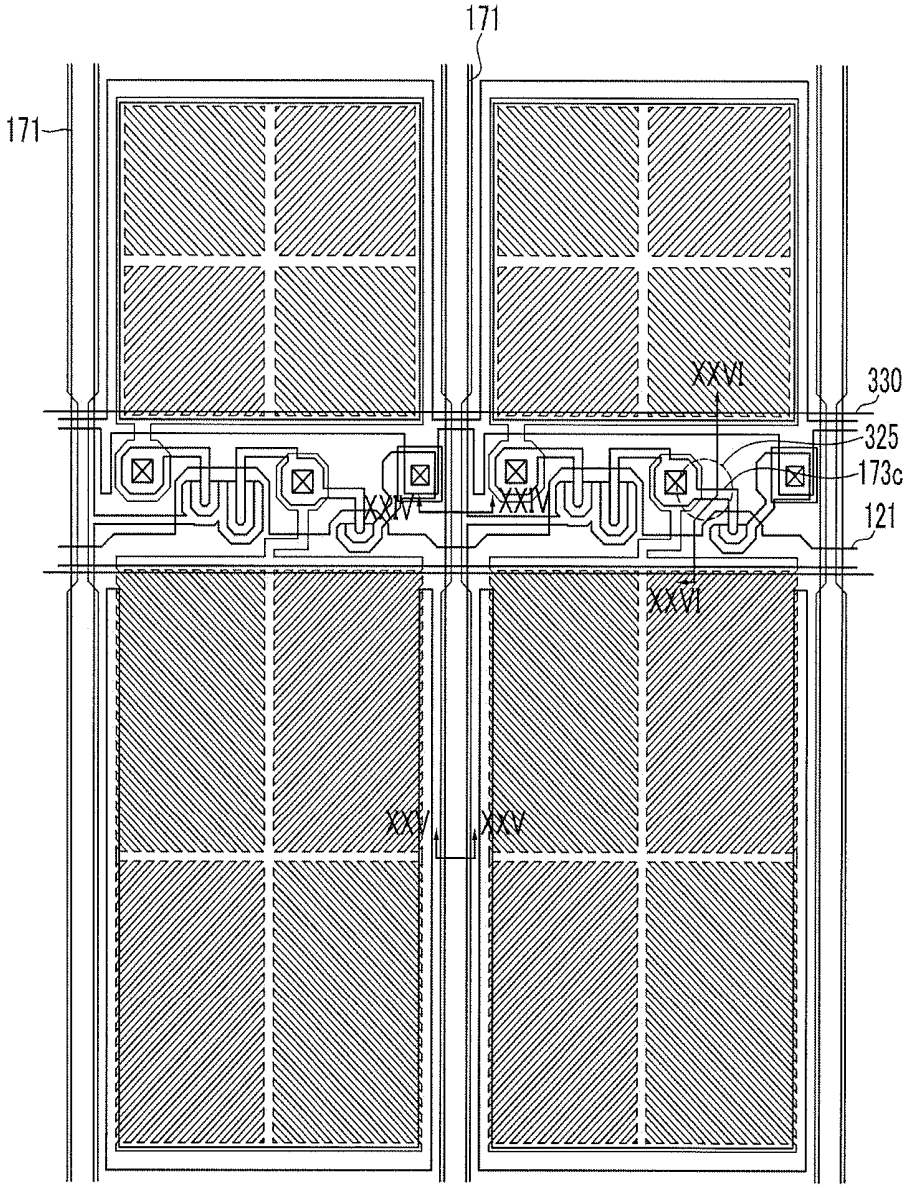

FIG.24

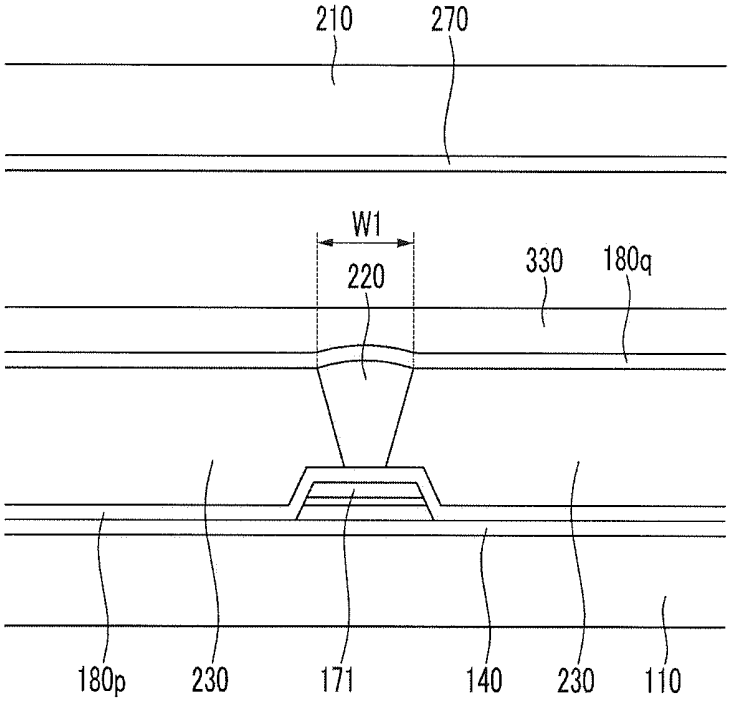

FIG.25

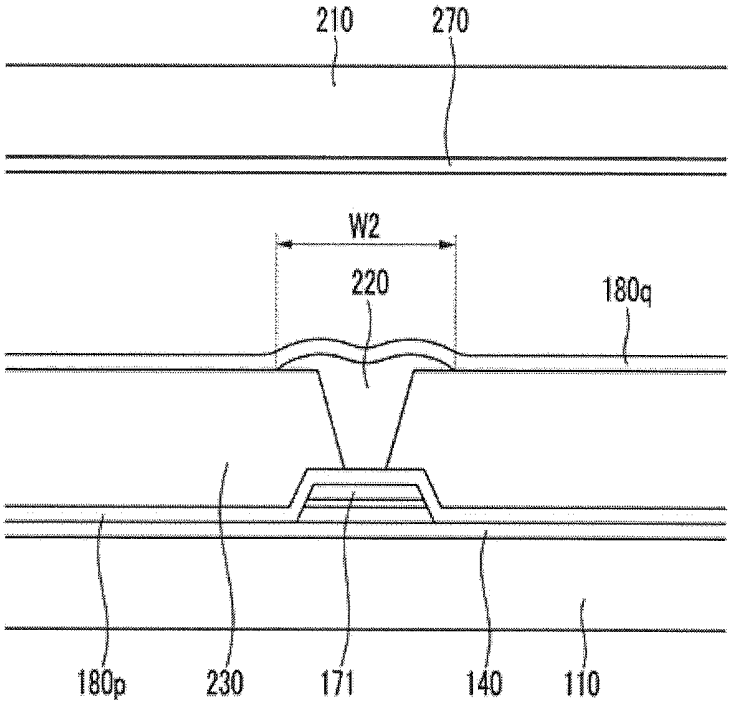

FIG.26

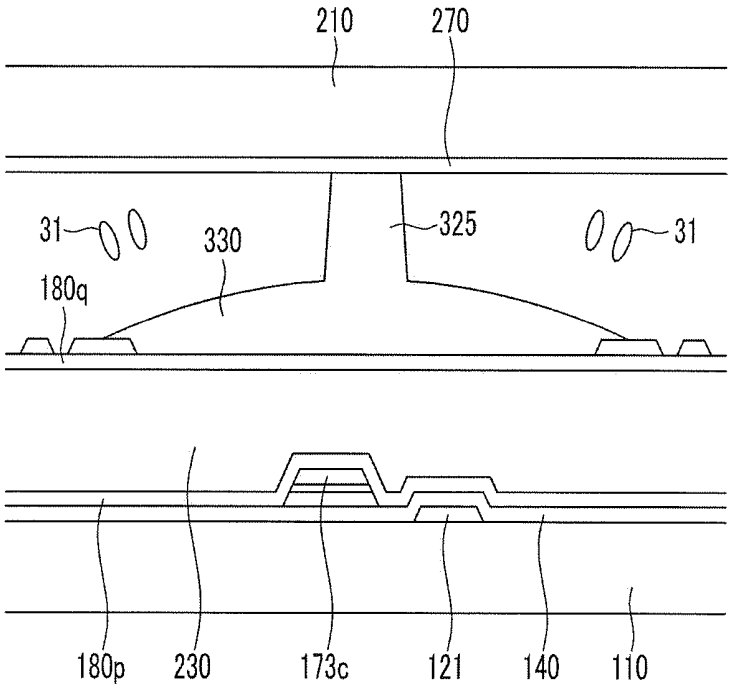

FIG.27

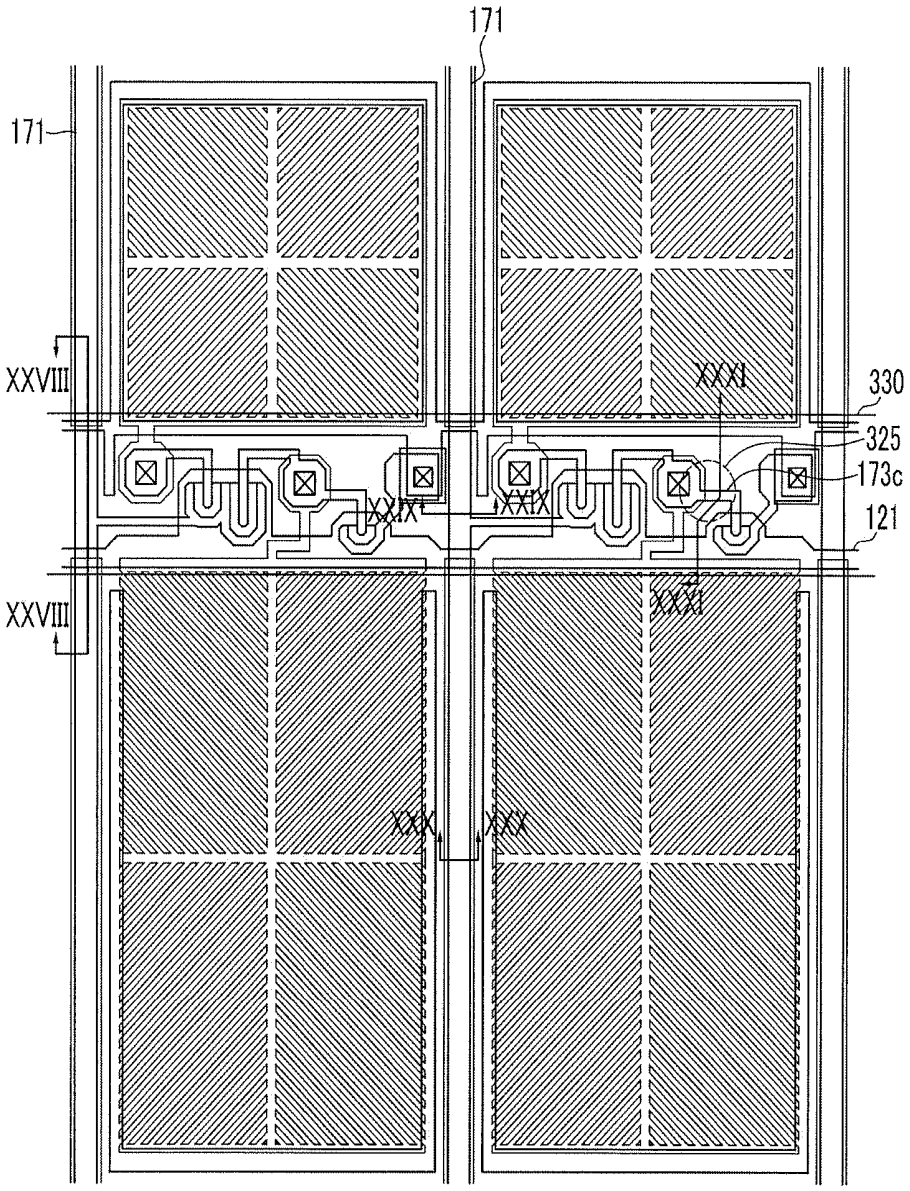
171
171
XXVIII
XXVIII
XXXI
XXXI
330
325
173c
121
XXXIX
XXXIX
XXX
XXX

FIG.28

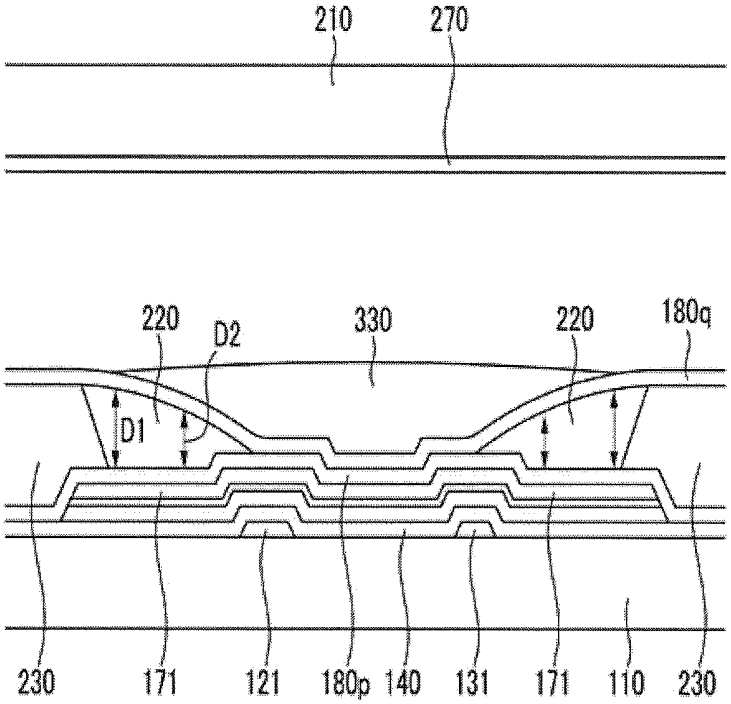
210
270
220
D2
330
220
180q
D1
230
171
121
180p
140
131
171
110
230

FIG.29

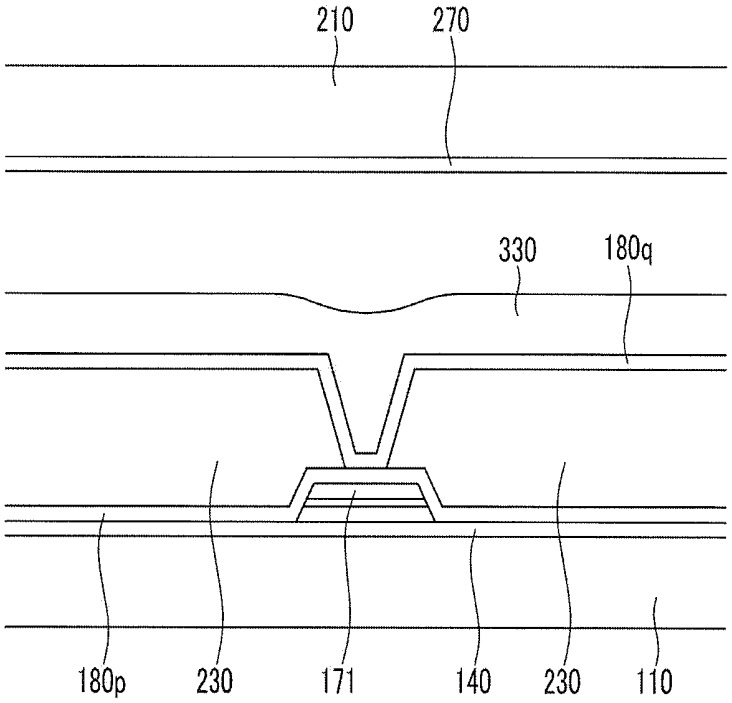

FIG.30

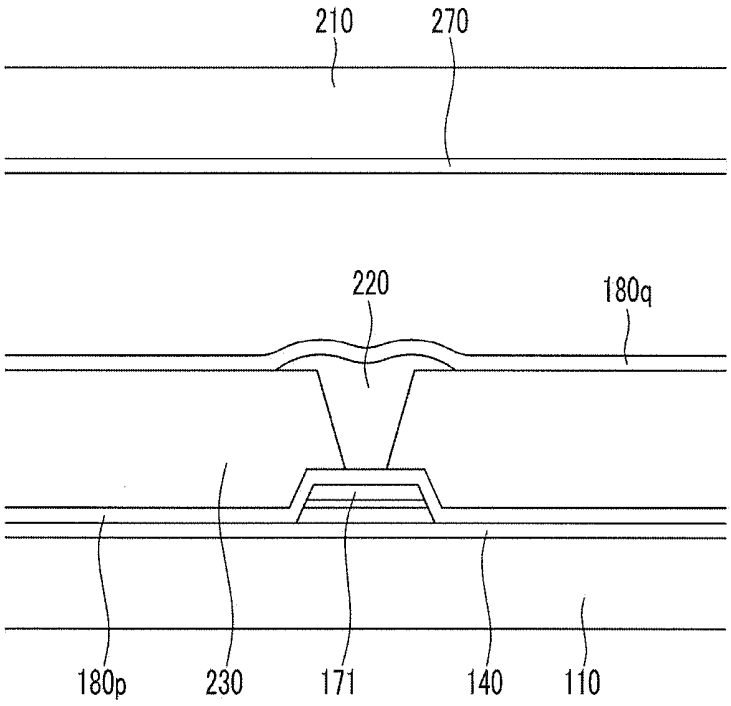

FIG.31

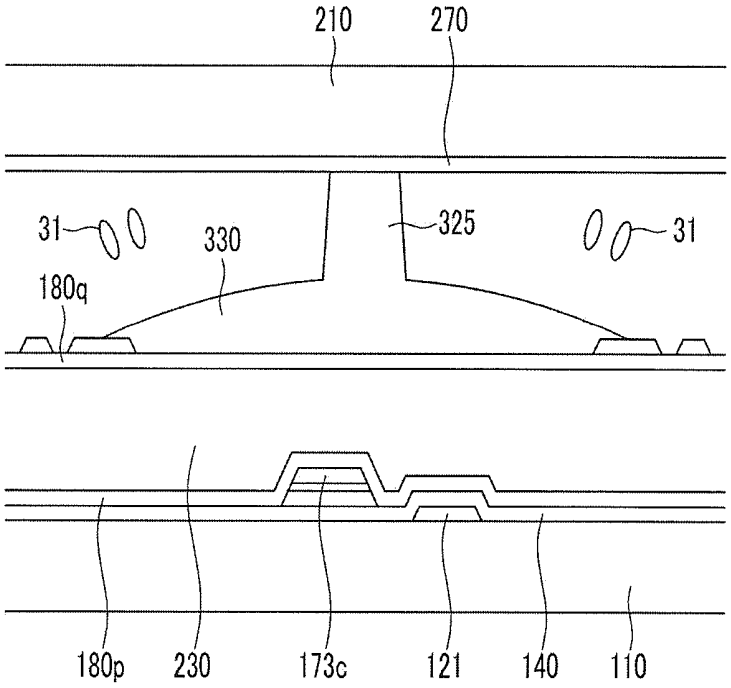

FIG.32

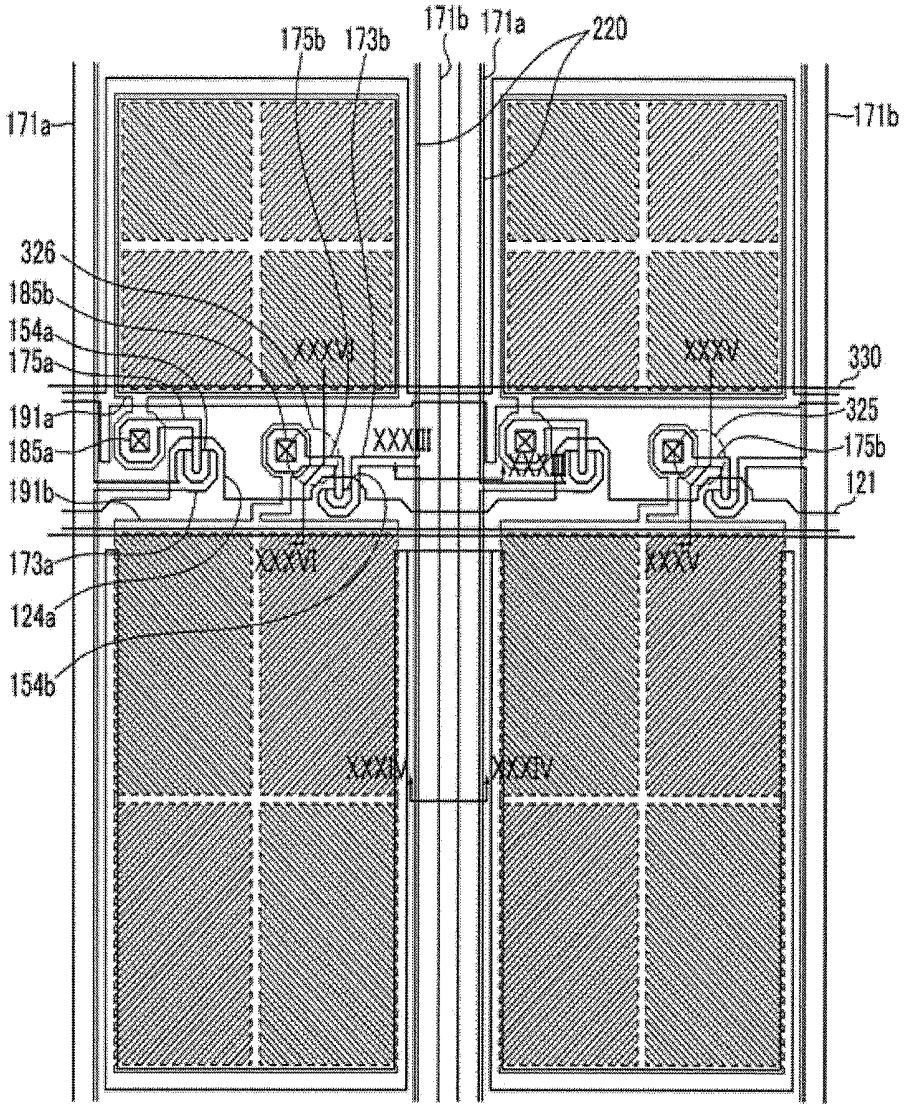
175b
173b
171b
171a
220
171a
171b
326
185b
154a
175a
XXXVI
XXXV
330
191a
325
185a
XXXIII
XXXIII
175b
191b
121
173a
XXXVI
XXXV
124a
154b
XXXIV
XXXIV

FIG.33

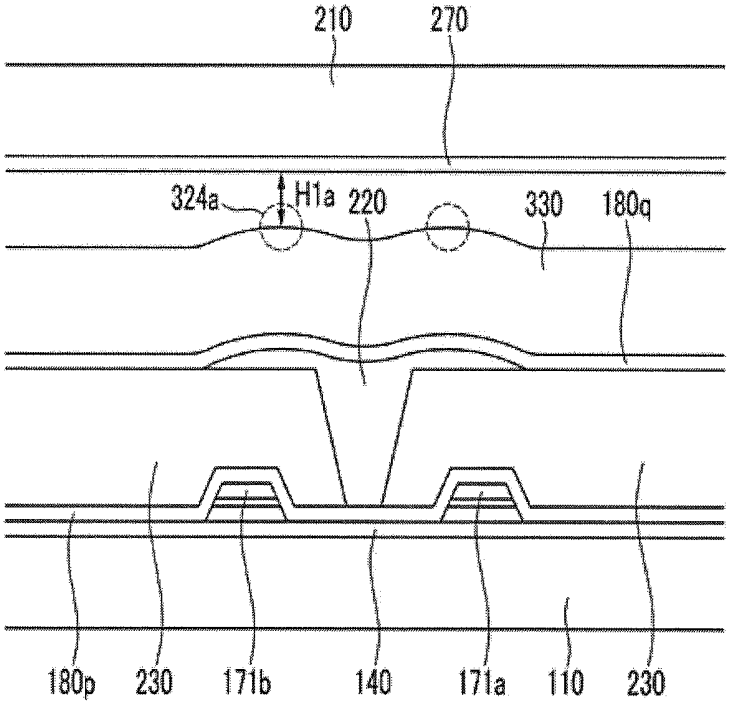

FIG.34

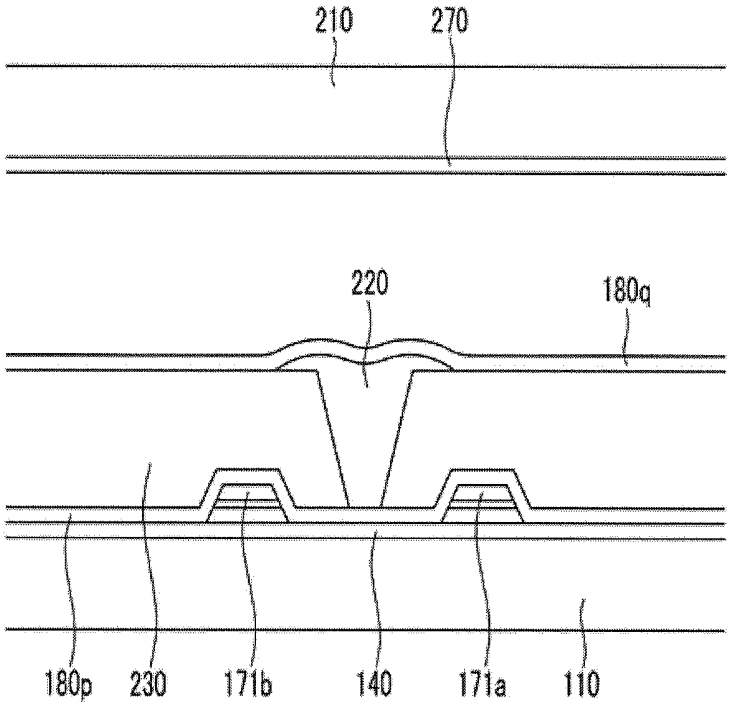

FIG.35

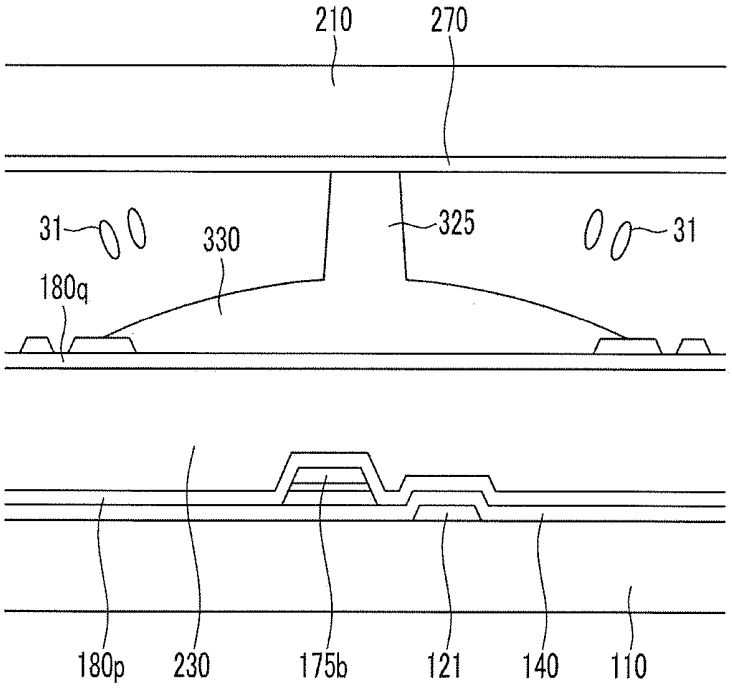

FIG.36

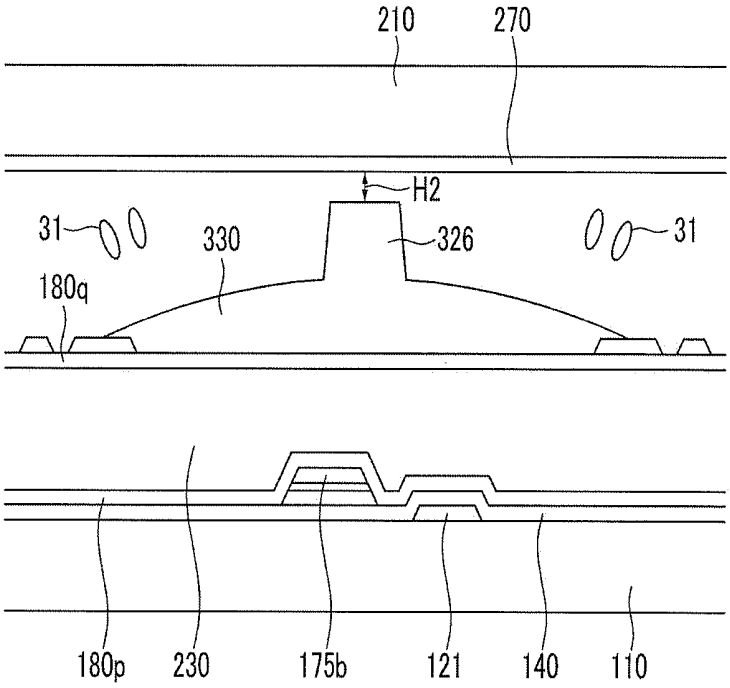

FIG.37

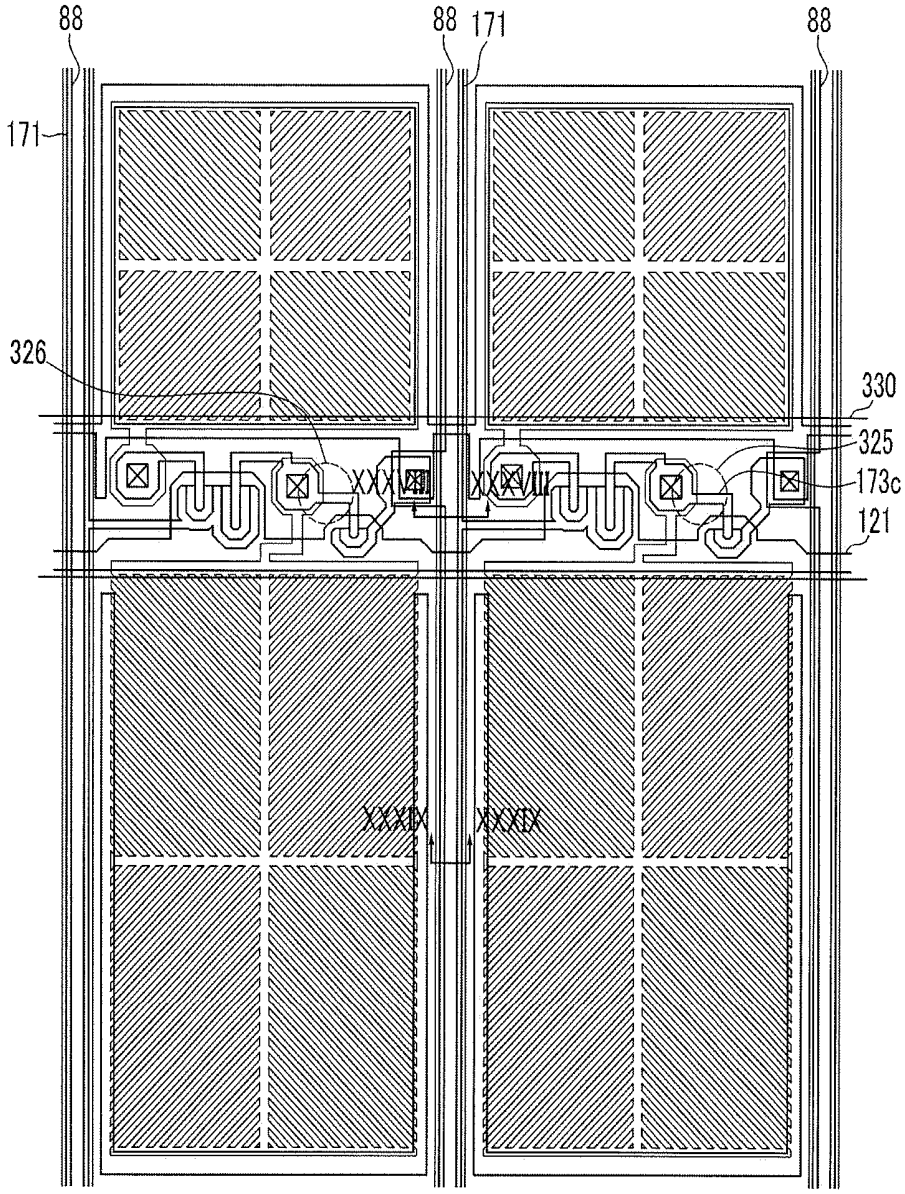
88
88
171
88
171
326
330
325
173c
121
XXXVIII
XXXVIII
XXXIX
XXXIX

FIG.38

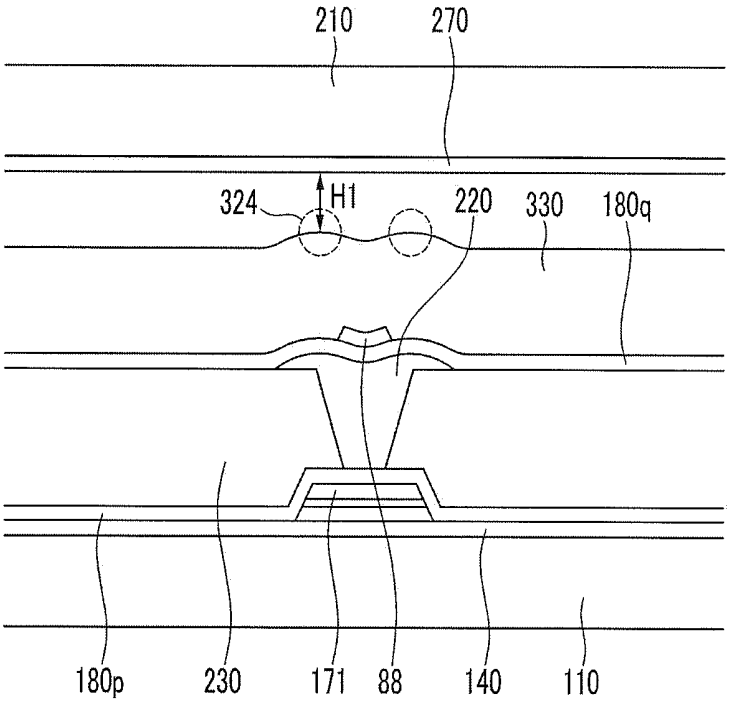

FIG.39

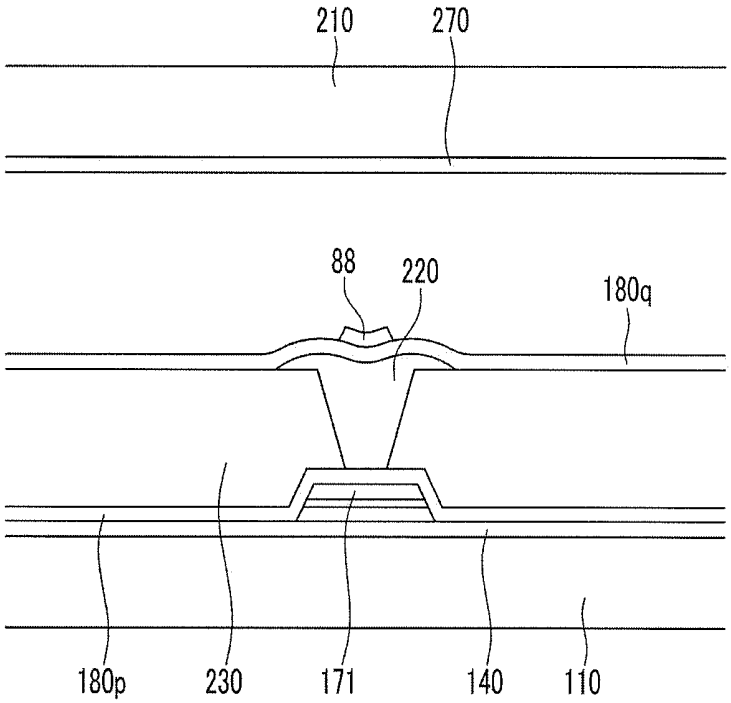

LIQUID CRYSTAL DISPLAY

[0001] This application claims priority to Korean Patent Application No. 10-2012-0110866, filed on Oct. 5, 2012, and all the benefits accruing therefrom under 35 U.S.C. §119, the content of which in its entirety is herein incorporated by reference.

BACKGROUND

[0002] (a) Field

[0003] Exemplary embodiments of the invention relate to a liquid crystal display.

[0004] (b) Description of the Related Art

[0005] A liquid crystal display, which is one of the most widely used types of flat panel displays, includes two sheets of display panels with field generating electrodes such as a pixel electrode and a common electrode and a liquid crystal layer interposed therebetween. The liquid crystal display generates an electric field in the liquid crystal layer by applying voltage to the field generating electrodes, and determines the direction of liquid crystal molecules of the liquid crystal layer by the generated electric field, thus controlling polarization of incident light to display images.

[0006] Among the liquid crystal displays, a vertically aligned mode liquid crystal display has been in the limelight, as the vertically aligned mode liquid crystal display including liquid crystal molecules, longitudinal axes of which are arranged substantially vertical to the display panel when the electric field is not applied, typically has a large contrast ratio and easily implements a wide reference viewing angle.

[0007] In the vertically aligned mode liquid crystal display, a plurality of domains having different alignment directions of the liquid crystal may be disposed in one pixel to implement a wide viewing angle.

[0008] In the vertically aligned mode liquid crystal display, a method of forming cutouts such as minute slits at the field generating electrode or a method of forming protrusions on the field generating electrode is used to provide the domains. The method may be used to provide the domains by aligning the liquid crystal in a vertical direction to a fringe field by the fringe field generated between the cutout or an edge of the protrusion and the field generating electrode opposed thereto.

[0009] In the liquid crystal display, a light blocking member is disposed at a position where a thin film transistor or the like is disposed to effectively prevent leakage current of a channel layer due to light. Further, when both a color filter and the light blocking member are disposed on a thin film transistor array panel, light leakage due to arrangement error of two display panels, which may occur in the case where the color filter and the light blocking member are disposed on a common electrode display panel, may be effectively prevented.

[0010] In the liquid crystal display, in the case where the light blocking member is provided on the thin film transistor array panel, the light blocking member may not be provided on the channel part of the thin film transistor so as to efficiently repair a defect of the thin film transistor during the manufacturing process thereof, and a colored member is typically provided to cover the channel part of the thin film transistor after repairing the thin film transistor.

SUMMARY

[0011] Exemplary embodiments of the invention relate to a liquid crystal display, in which light leakage due to an arrangement error is effectively prevented by providing a color filter and a light blocking member on a thin film transistor array panel, a performance characteristic of a thin film transistor is effectively prevented from deteriorating by additional thin film, which is provided to compensate a step of the light blocking member, and the thin film transistor is efficiently repaired during a manufacturing process thereof.

[0012] An exemplary embodiment of the invention provides a liquid crystal display including: a first insulation substrate; a gate line disposed on the first insulation substrate; a first data line and a second data line disposed on the first insulation substrate; a color filter disposed on the first insulation substrate and disposed between the first data line and the second data line; a first light blocking member disposed on the first data line and the second data line; and a second light blocking member disposed on the color filter and the first light blocking member, extending in the same direction as the gate line, and overlapping the first light blocking member on the first data line and the second data line.

[0013] In an exemplary embodiment, a width of the first light blocking member may be substantially constant.

[0014] In an exemplary embodiment, the second light blocking member may include a first portion, a second portion, and a third portion, and thicknesses of the first, second and third portions are different from each other.

[0015] In an exemplary embodiment, the liquid crystal display may further include a pixel electrode disposed on the color filter and including a first subpixel electrode and a second subpixel electrode separated from each other with the gate line, which is disposed between the first and second subpixel electrodes; a first thin film transistor connected to the first subpixel electrode; and a second thin film transistor connected to the second subpixel electrode, in which the second light blocking member may extend along the gate line and cover the first thin film transistor and the second thin film transistor.

[0016] In an exemplary embodiment, each of the first subpixel electrode and the second subpixel electrode may include a plurality of stems and a plurality of branch electrodes protruding from the stems.

[0017] In an exemplary embodiment, the second light blocking member may include a first portion and a second portion, and thicknesses of the first and second portion may be different from each other.

[0018] In an exemplary embodiment, the first portion may contact a surface of a thin film which is disposed on a second insulation substrate disposed opposite to the first insulation substrate.

[0019] In an exemplary embodiment, the second portion may include a first region at which the second portion overlaps the first light blocking member and a second region which is a remaining region thereof, and a distance between the first region and the surface of the thin film disposed on the second insulation substrate may be less than a distance between the second region and the surface of the thin film disposed on the second insulation substrate.

[0020] In an exemplary embodiment, a width of the first light blocking member at an overlapping portion of the first light blocking member and the second light blocking member may be less than a width of the remaining portion of the first light blocking member.

[0021] In an exemplary embodiment, a width of the first light blocking member may be about 0.7 micrometer (μm) at

an overlapping portion of the first light blocking member and the second light blocking member.

[0022] In an exemplary embodiment, a thickness of the first light blocking member may be decreased as being closer to a center of the second light blocking member from the overlapping portion of the first light blocking member and the second light blocking member.

[0023] In an exemplary embodiment, the thickness of the first light blocking member may be about 0 μm at the center of the second light blocking member.

[0024] In an exemplary embodiment, the liquid crystal display may further include a color filter disposed between two adjacent data lines, a first light blocking member disposed on the data lines, and a second light blocking member disposed on the color filter in a region where the thin film transistor is disposed, in which the first light blocking member and the second light blocking member may be overlapping at least a portion of each other.

[0025] According to exemplary embodiments of the invention, light leakage in the region adjacent to the data line and the gate line is effectively prevented while the light leakage due to the arrangement error is effectively prevented by the color filter and the light blocking member disposed on the thin film transistor array panel. In such embodiments, a performance characteristic of the thin film transistor is effectively prevented from deteriorating due to formation of a thin film due to the step of the first light blocking member by the color filter disposed on the thin film transistor without providing the first light blocking member on the thin film transistor for efficiently repair of the thin film transistor.

BRIEF DESCRIPTION OF THE DRAWINGS

[0026] The above and other features of the invention will become more apparent by describing in further detail exemplary embodiments thereof with reference to the accompanying drawings, in which:

[0027] FIG. **1** is an equivalent circuit diagram of a pixel of an exemplary embodiment of a liquid crystal display according to the invention;

[0028] FIG. **2** is a top plan view of a pixel of an exemplary embodiment of the liquid crystal display according to the invention;

[0029] FIG. **3** is a cross-sectional view taken along line III-III of the liquid crystal display of FIG. **2**;

[0030] FIG. **4** is a plan view of a unit region of a pixel electrode of an exemplary embodiment of the liquid crystal display according to the invention;

[0031] FIG. **5** is a diagram illustrating a process in which liquid crystal molecules have pretilts using a prepolymer polymerized by light such as ultraviolet light;

[0032] FIG. **6** is a top plan view of two pixels of an exemplary embodiment of the liquid crystal display according to the invention;

[0033] FIG. **7** is a cross-sectional view taken along line VII-VII of the liquid crystal display of FIG. **6**;

[0034] FIG. **8** is a cross-sectional view taken along line VIII-VIII of the liquid crystal display of FIG. **6**;

[0035] FIG. **9** is a cross-sectional view taken along line IX-IX of the liquid crystal display of FIG. **6**;

[0036] FIG. **10** is a cross-sectional view taken along line X-X of the liquid crystal display of FIG. **6**;

[0037] FIG. **11** is a cross-sectional view of another alternative exemplary embodiment of the liquid crystal display according to the invention, which corresponds to a cross-sectional view taken along line III-III of the liquid crystal display of FIG. **2**;

[0038] FIGS. **12** to **14** are cross-sectional views of an alternative exemplary embodiment of the liquid crystal display according to the invention, which correspond to cross-sectional views taken along lines VII-VII, VIII-VIII and IV-IV of the liquid crystal display of FIG. **6**;

[0039] FIG. **15** is a cross-sectional view of an alternative exemplary embodiment of the liquid crystal display according to the invention, which corresponds to a cross-sectional view taken along line III-III of the liquid crystal display of FIG. **2**;

[0040] FIGS. **16** to **18** are cross-sectional views of an alternative exemplary embodiment of the liquid crystal display according to the invention, which correspond to cross-sectional views taken along lines VII-VII, VIII-VIII and IV-IV of the liquid crystal display of FIG. **6**;

[0041] FIG. **19** is a cross-sectional view of an alternative exemplary embodiment of the liquid crystal display according to the invention, which corresponds to a cross-sectional view taken along line III-III of the liquid crystal display of FIG. **2**;

[0042] FIGS. **20** to **22** are cross-sectional views of an alternative exemplary embodiment of the liquid crystal display according to another exemplary embodiment of the invention, which correspond to cross-sectional views taken along lines VII-VII, VIII-VIII and IV-IV of the liquid crystal display of FIG. **6**;

[0043] FIG. **23** is a layout view illustrating two pixels of an alternative exemplary embodiment of the liquid crystal display according to the invention;

[0044] FIG. **24** is a cross-sectional view taken along line XXIV-XXIV of the liquid crystal display of FIG. **23**;

[0045] FIG. **25** is a cross-sectional view taken along line XXV-XXV of the liquid crystal display of FIG. **23**;

[0046] FIG. **26** is a cross-sectional view taken along line XXVI-XXVI of the liquid crystal display of FIG. **23**;

[0047] FIG. **27** is a layout view illustrating two pixels of the liquid crystal display according to another exemplary embodiment of the invention;

[0048] FIG. **28** is a cross-sectional view taken along line XXVIII-XXVIII of the liquid crystal display of FIG. **27**;

[0049] FIG. **29** is a cross-sectional view taken along line XXIX-XXIX of the liquid crystal display of FIG. **27**;

[0050] FIG. **30** is a cross-sectional view taken along line XXX-XXX of the liquid crystal display of FIG. **27**;

[0051] FIG. **31** is a cross-sectional view taken along line XXXI-XXXI of the liquid crystal display of FIG. **27**;

[0052] FIG. **32** is a top plan view of two pixels of another alternative exemplary embodiment of the liquid crystal display according to the invention;

[0053] FIG. **33** is a cross-sectional view taken along line XXXIII-XXXIII of the liquid crystal display of FIG. **32**;

[0054] FIG. **34** is a cross-sectional view taken along line XXXIV-XXXIV of the liquid crystal display of FIG. **32**;

[0055] FIG. **35** is a cross-sectional view taken along line XXXV-XXXV of the liquid crystal display of FIG. **32**;

[0056] FIG. **36** is a cross-sectional view taken along line XXXVI-XXXVI of the liquid crystal display of FIG. **32**;

[0057] FIG. **37** is a top plan view of two pixels of another alternative exemplary embodiment of the liquid crystal display according to the invention;

[0058] FIG. **38** is a cross-sectional view taken along line XXXVIII-XXXVIII of the liquid crystal display of FIG. **37**; and

[0059] FIG. **39** is a cross-sectional view taken along line XXXIX-XXXIX of the liquid crystal display of FIG. **37**.

DETAILED DESCRIPTION

[0060] The invention will be described more fully hereinafter with reference to the accompanying drawings, in which exemplary embodiments of the invention are shown. This invention may, however, be embodied in many different forms, and should not be construed as limited to the embodiments set forth herein. Rather, these embodiments are provided so that this disclosure will be thorough and complete, and will fully convey the scope of the invention to those skilled in the art. Like reference numerals refer to like elements throughout.

[0061] It will be understood that when an element or layer is referred to as being "on", "connected to" or "coupled to" another element or layer, it can be directly on, connected or coupled to the other element or layer or intervening elements or layers may be present. In contrast, when an element is referred to as being "directly on," "directly connected to" or "directly coupled to" another element or layer, there are no intervening elements or layers present. Like numbers refer to like elements throughout. As used herein, the term "and/or" includes any and all combinations of one or more of the associated listed items.

[0062] It will be understood that, although the terms first, second, etc. may be used herein to describe various elements, components, regions, layers and/or sections, these elements, components, regions, layers and/or sections should not be limited by these terms. These terms are only used to distinguish one element, component, region, layer or section from another region, layer or section. Thus, a first element, component, region, layer or section discussed below could be termed a second element, component, region, layer or section without departing from the teachings of the invention.

[0063] Spatially relative terms, such as "beneath", "below", "lower", "above", "upper" and the like, may be used herein for ease of description to describe one element or feature's relationship to another element(s) or feature(s) as illustrated in the figures. It will be understood that the spatially relative terms are intended to encompass different orientations of the device in use or operation in addition to the orientation depicted in the figures. For example, if the device in the figures is turned over, elements described as "below" or "beneath" other elements or features would then be oriented "above" the other elements or features. Thus, the exemplary term "below" can encompass both an orientation of above and below. The device may be otherwise oriented (rotated 90 degrees or at other orientations) and the spatially relative descriptors used herein interpreted accordingly.

[0064] The terminology used herein is for the purpose of describing particular embodiments only and is not intended to be limiting of the invention. As used herein, the singular forms, "a", "an" and "the" are intended to include the plural forms as well, unless the context clearly indicates otherwise. It will be further understood that the terms "includes" and/or "including", when used in this specification, specify the presence of stated features, integers, steps, operations, elements, and/or components, but do not preclude the presence or addition of one or more other features, integers, steps, operations, elements, components, and/or groups thereof.

[0065] Unless otherwise defined, all terms (including technical and scientific terms) used herein have the same meaning as commonly understood by one of ordinary skill in the art to which this invention belongs. It will be further understood that terms, such as those defined in commonly used dictionaries, should be interpreted as having a meaning that is consistent with their meaning in the context of the relevant art and will not be interpreted in an idealized or overly formal sense unless expressly so defined herein.

[0066] Exemplary embodiments are described herein with reference to cross section illustrations that are schematic illustrations of idealized embodiments. As such, variations from the shapes of the illustrations as a result, for example, of manufacturing techniques and/or tolerances, are to be expected. Thus, embodiments described herein should not be construed as limited to the particular shapes of regions as illustrated herein but are to include deviations in shapes that result, for example, from manufacturing. For example, a region illustrated or described as flat may, typically, have rough and/or nonlinear features. Moreover, sharp angles that are illustrated may be rounded. Thus, the regions illustrated in the figures are schematic in nature and their shapes are not intended to illustrate the precise shape of a region and are not intended to limit the scope of the claims set forth herein.

[0067] All methods described herein can be performed in a suitable order unless otherwise indicated herein or otherwise clearly contradicted by context. The use of any and all examples, or exemplary language (e.g., "such as"), is intended merely to better illustrate the invention and does not pose a limitation on the scope of the invention unless otherwise claimed. No language in the specification should be construed as indicating any non-claimed element as essential to the practice of the invention as used herein.

[0068] First, a layout of signal lines and a pixel of an exemplary embodiment of a liquid crystal display according to the invention and a driving method thereof will be described with reference to FIG. **1**. FIG. **1** is an equivalent circuit diagram of a pixel of an exemplary embodiment of a liquid crystal display according to the invention.

[0069] Referring to FIG. **1**, in an exemplary embodiment, a pixel PX, e.g., a single pixel, of the liquid crystal display includes a plurality of signal lines including a gate line GL that transfers a gate signal, a data line DL that transfers a data signal, and a divided reference voltage line RL that transfers divided reference voltage, and first, second and third switching elements Qa, Qb and Qc and first and second liquid crystal capacitors Clca and Clcb, which are connected to the signal lines.

[0070] The first and the second switching elements Qa and Qb are connected to the gate line GL and the data line DL, and the third switching element Qc is connected to an output terminal of the second switching element Qb and the divided reference voltage line RL.

[0071] In an exemplary embodiment, the first switching element Qa and the second switching element Qb are three-terminal elements such as a thin film transistor, control terminals thereof are connected to the gate line GL, and input terminals thereof are connected to the data line DL. In such an embodiment, an output terminal of the first switching element Qa is connected to the first liquid crystal capacitor Clca, and an output terminal of the second switching element Qb is connected to an input terminal of the second liquid crystal capacitor Clcb and the third switching element Qc.

[0072] In such an embodiment, the third switching element Qc is a three-terminal element such as a thin film transistor, a control terminal thereof is connected to the gate line GL, an input terminal thereof is connected to the second liquid crystal capacitor Clcb, and an output terminal thereof is connected to the divided reference voltage line RL.

[0073] When a gate on signal is applied to the gate line GL, the first switching element Qa, the second switching element Qb and the third switching element Qc connected thereto are turned on. Accordingly, data voltage applied to the data line DL is applied to a first subpixel electrode PEa and a second subpixel electrode PEb through the turned-on first switching element Qa and second switching element Qb. In such an embodiment, the data voltages applied to the first subpixel electrode PEa and the second subpixel electrode PEb are substantially the same as each other, and the first liquid crystal capacitor Clca and the second liquid crystal capacitor Clcb are charged to substantially the same value by a difference between a common voltage and the data voltage. Simultaneously, the voltage charged in the second liquid crystal capacitor Clcb is divided through the turned-on third switching element Qc. As a result, a voltage value charged in the second liquid crystal capacitor Clcb is lowered by a difference between the common voltage and the divided reference voltage. In such an embodiment, the voltage charged in the first liquid crystal capacitor Clca is greater than the voltage charged in the second liquid crystal capacitor Clcb.

[0074] In such an embodiment, as described above, the voltage charged in the first liquid crystal capacitor Clca and the voltage charged in the second liquid crystal capacitor Clcb are different from each other. In such an embodiment, where the voltage of the first liquid crystal capacitor Clca and the voltage of the second liquid crystal capacitor Clcb are different from each other, inclined angles of liquid crystal molecules are different from each other in the first subpixel and the second subpixel, such that luminance of the two subpixels varies. Accordingly, in such an embodiment, an image viewed from a side may be substantially close to an image viewed from a front by controlling the voltage of the first liquid crystal capacitor Clca and the voltage of the second liquid crystal capacitor Clcb, thereby substantially improving side visibility.

[0075] In an exemplary embodiment, as shown in FIG. **1**, the third switching element Qc connected to the second liquid crystal capacitor Clcb and the divided reference voltage line RL is included to differentiate the voltage charged in the first liquid crystal capacitor Clca and the voltage charged in the second liquid crystal capacitor Clcb, but not being limited thereto. In an alternative exemplary embodiment of a liquid crystal display according to the invention, the second liquid crystal capacitor Clcb may be connected to a step-down capacitor. In such an embodiment, the third switching element including a first terminal connected to a step-down gate line, a second terminal connected to the second liquid crystal capacitor Clcb and a third terminal connected to the step-down capacitor is included to charge a portion of charges charged in the second liquid crystal capacitor Clcb in the step-down capacitor, such that the charged voltages between the first liquid crystal capacitor Clcb and the second liquid crystal capacitor Clcb may be differently set. In another alternative exemplary embodiment of the liquid crystal display according to the invention, the first liquid crystal capacitor Clcb and the second liquid crystal capacitor Clcb are connected to different data lines, respectively, to receive different data voltages, and as a result, the charged voltages between the first liquid crystal capacitor Clcb and the second liquid crystal capacitor Clcb may be differently set. In an exemplary embodiment, the charged voltages between the first liquid crystal capacitor Clcb and the second liquid crystal capacitor Clcb may be differently set using various methods.

[0076] Now, a structure of an exemplary embodiment of the liquid crystal display will be simply described with reference to FIGS. **2** to **5**. FIG. **2** is a top plan view of a pixel of an exemplary embodiment of the liquid crystal display according to the invention, and FIG. **3** is a cross-sectional view taken along line III-III of the liquid crystal display of FIG. **2**. FIG. **4** is a plan view of a unit region of a pixel electrode of an exemplary embodiment of the liquid crystal display according to the invention, and FIG. **5** is a diagram illustrating a process in which liquid crystal molecules have pretilts using a prepolymer polymerized by light such as ultraviolet light.

[0077] Referring to FIGS. **2** and **3**, the liquid crystal display includes a lower panel **100** and an upper panel **200** disposed opposite to, e.g., facing, each other, a liquid crystal layer **3** interposed between the lower and upper panels **100** and **200**, and a pair of polarizers (not illustrated) disposed on, e.g., attached to, outer surfaces of the lower and upper panels **100** and **200**.

[0078] First, the lower panel **100** will be described.

[0079] The lower panel **100** includes a first insulation substrate **110** including transparent glass, plastic, or the like. A gate conductor including a gate line **121** and a divided reference voltage line **131** is disposed on the first insulation substrate **110**.

[0080] The gate line **121** includes a wide end portion (not illustrated) for connection with a first gate electrode **124***a*, a second gate electrode **124***b*, a third gate electrode **124***c*, and other layers or an external driving circuit.

[0081] The divided reference voltage line **131** is connected to first storage electrodes **135** and **136** and a reference electrode **137**. Second storage electrodes **138** and **139**, which are not connected to the divided reference voltage line **131**, are disposed on the first insulation substrate **110** and overlap a second subpixel electrode **191***b*.

[0082] A gate insulating layer **140** is disposed on the gate line **121** and the divided reference voltage line **131**.

[0083] A first semiconductor **154***a*, a second semiconductor **154***b* and a third semiconductor **154***c* are disposed on the gate insulating layer **140**.

[0084] A plurality of ohmic contacts **163***a*, **165***a*, **163***b*, **165***b*, **163***c* and **165***c* is disposed on the semiconductors **154***a*, **154***b* and **154***c*.

[0085] A data conductor including a plurality of data lines **171** including a first source electrode **173***a* and a second source electrode **173***b*, a first drain electrode **175***a*, a second drain electrode **175***b*, a third source electrode **173***c* and a third drain electrode **175***c* is disposed on the ohmic contacts **163***a*, **165***a*, **163***b*, **165***b*, **163***c* and **165***c* and the gate insulating layer **140**.

[0086] In an exemplary embodiment, the data conductor and the semiconductors and ohmic contacts below the data conductor may be provided, e.g., formed, during a same process using a single mask.

[0087] The data line **171** includes a wide end portion (not illustrated) for connection with other layers or an external driving circuit.

[0088] The first gate electrode **124***a*, the first source electrode **173***a* and the first drain electrode **175***a* collectively

define the first thin film transistor Qa together with a first semiconductor island **154***a*, and a channel of the first thin film transistor is formed in the semiconductor **154***a* between the first source electrode **173***a* and the first drain electrode **175***a*. Similarly, the second gate electrode **124***b*, the second source electrode **173***b* and the second drain electrode **175***b* collectively define the second thin film transistor Qb together with a second semiconductor island **154***b*, and a channel of the second thin film transistor is formed in the semiconductor **154***b* between the second source electrode **173***b* and the second drain electrode **175***b*. The third gate electrode **124***c*, the third source electrode **173***c* and the third drain electrode **175***c* collectively define the third thin film transistor Qc together with a third semiconductor island **154***c*, and a channel of the third thin film transistor is formed in the semiconductor **154***c* between the third source electrode **173***c* and the third drain electrode **175***c*.

[0089] The second drain electrode **175***b* is connected to the third source electrode **173***c* and includes a widely extended extension **177**.

[0090] A first passivation layer **180***p* is disposed on the data conductor **171**, **173***c*, **175***a*, **175***b* and **175***c*, and exposed portions of the semiconductors **154***a*, **154***b* and **154***c*. The first passivation layer **180***p* may include an inorganic insulating layer including silicon nitride or silicon oxide, for example. The first passivation layer **180***p* may effectively prevent a pigment of a color filter **230** from flowing into the exposed portions of the semiconductors **154***a*, **154***b*, and **154***c*.

[0091] The color filter **230** is disposed on the first passivation layer **180***p*. The color filter **230** extends in a vertical direction along two data lines which are adjacent to each other. A first light blocking member **220** is positioned on the first passivation layer **180***p*, an edge of the color filter **230** and the data line **171**.

[0092] The first light blocking member **220** extends along the data line **171** and is positioned between two adjacent color filters **230**. A width of the first light blocking member **220** may be greater than a width of the data line **171**. In such an embodiment, where the width of the first light blocking member **220** is greater than the width of the data line **171**, the first light blocking member **220** may effectively prevent light incident from outside from being reflected onto the surface of the data line **171** including metal and interfering with light passing through the liquid crystal layer **3**. In such an embodiment, the light is effectively prevented from being reflected onto the surface of the data line **171** such that a contrast ratio of the liquid crystal display is substantially improved.

[0093] A second passivation layer **180***q* is disposed on the color filter **230** and the first light blocking member **220**.

[0094] The second passivation layer **180***q* may include an inorganic insulating layer such as silicon nitride or silicon oxide. The second passivation layer **180***q* effectively prevents the color filter **230** from being lifted and effectively prevents a defect such as an afterimage which may occur when a screen is driven by suppressing contamination of the liquid crystal layer **3** due to an organic material such as a solvent which may flows in from the color filter **230**.

[0095] A first contact hole **185***a* and a second contact hole **185***b*, which expose the first drain electrode **175***a* and the second drain electrode **175***b*, respectively, are defined, e.g., formed, in the first passivation layer **180***p* and the second passivation layer **180***q*.

[0096] A third contact hole **185***c* that exposes a portion of the reference electrode **137** and a portion of the third drain electrode **175***c* is formed in the first passivation layer **180***p*, the second passivation layer **180***q* and the gate insulating layer **140**, and the third contact hole **185***c* is covered by a connecting member **195**. The connecting member **195** electrically connects the reference electrode **137** and the third drain electrode **175***c*, which are exposed through the third contact hole **185***c*.

[0097] A plurality of pixel electrodes **191** is disposed on the second passivation layer **180***q*. Each of the pixel electrodes **191** is spaced apart from each other with the gate line **121** therebetween, and the pixel electrodes **191** includes a first subpixel electrode **191***a* and a second subpixel electrode **191***b*, which are adjacent to each other in a column direction interposing the gate line **121**. The pixel electrode **191** may include a transparent material such as indium tin oxide ("ITO") and indium zinc oxide ("IZO"), for example. The pixel electrode **191** may include a transparent conductive material such as ITO and IZO, for example, or a metal such as aluminum, silver, chromium, copper, molybdenum, titanium, or an alloy thereof, for example.

[0098] Each of the first subpixel electrode **191***a* and the second subpixel electrode **191***b* include a unit electrode shown in FIG. **4**, but not being limited thereto. In an exemplary embodiment, the unit electrode may be variously modified.

[0099] The first subpixel electrode **191***a* and the second subpixel electrode **191***b* are physically and electrically connected to the first drain electrode **175***a* and the second drain electrode **175***b*, respectively, through the first contact hole **185***a* and the second contact hole **185***b*, respectively, and the first subpixel electrode **191***a* and the second subpixel electrode **191***b* receive data voltages from the first drain electrode **175***a* and the second drain electrode **175***b*, respectively. In an exemplary embodiment, a part of the data voltage applied to the second drain electrode **175***b* is divided through the third source electrode **173***c*, such that a magnitude of the voltage applied to the first subpixel electrode **191***a* is greater than a magnitude of voltage applied to the second subpixel electrode **191***b*.

[0100] The first subpixel electrode **191***a* and the second subpixel electrode **191***b* applied with the data voltages generate an electric field together with a common electrode **270** of the upper panel **200** to determine directions of liquid crystal molecules of the liquid crystal layer **3** between the pixel and common electrodes **191** and **270**. Luminance of light passing through the liquid crystal layer **3** changes according to the determined directions of the liquid crystal molecules. Though the liquid crystal display according to the embodiment includes the common electrode **270** of the upper panel **200**, the liquid crystal display according to another embodiment of the present invention includes a common electrode disposed on the lower panel **100**. Further, the liquid crystal display according to another embodiment of the present invention further includes additional electrode to generate an electric field to the liquid crystal layer.

[0101] A second light blocking member **330** is positioned on the pixel electrode **191**. The second light blocking member **330** is disposed to cover substantially an entire of a region, in which the first transistor Qa, the second transistor Qb, the third transistor Qc and the first to third contact holes **185***a*, **185***b*, and **185***c* are disposed, and extends in the same direction as the gate line **121** and crosses a portion of the data line **171**. The second light blocking member **330** overlap at least a portion of the two data lines **171** which are disposed at both

sides of a pixel area such that light leakage that may occur around the data line **171** and the gate line **121** and light leakage in a region, where the first transistor Qa, the second transistor Qb and the third transistor Qc are positioned, are effectively prevented.

[0102] In an exemplary embodiment, the second light blocking member **330** may be provided after providing the first passivation layer **180***p*, the color filter **230** and the second passivation layer **180***q* in the region where the first transistor Qa, the second transistor Qb, the third transistor Qc and the first to third contact holes **185***a*, **185***b*, and **185***c* are positioned, such that the positions of the first transistor Qa, the second transistor Qb, the third transistor Qc and the first to third contact holes **185***a*, **185***b* and **185***c* are efficiently distinguished.

[0103] Hereinafter, the upper panel **200** will be described.

[0104] The upper panel **200** includes a second insulation substrate **210** and a common electrode **270** disposed on the second insulation substrate **210**. An upper alignment layer (not shown) is disposed on the common electrode **270**. In an exemplary embodiment, the upper alignment layer may be a vertical alignment layer. Though the liquid crystal display according to the embodiment includes the common electrode **270** of the upper panel **200**, the liquid crystal display according to another embodiment of the present invention includes a common electrode disposed on the lower panel **100**. Further, the liquid crystal display according to another embodiment of the present invention further includes additional electrode to generate an electric field to the liquid crystal layer.

[0105] In an exemplary embodiment, the liquid crystal layer **3** has negative dielectric anisotropy, and longitudinal axes of the liquid crystal molecules in the liquid crystal layer **3** are aligned substantially vertical to surfaces, e.g., inner surfaces, of the lower and upper panels **100** and **200** when the electric field is not generated therein. However, according to the liquid crystal display of another embodiment of the present invention, the liquid crystal molecules in the liquid crystal layer **3** may be aligned substantially parallel to surfaces of the lower and upper panels **100** and **200**.

[0106] A unit electrode of an exemplary embodiment of the subpixel electrode **191** will now be described with reference to FIG. **4**.

[0107] As illustrated in FIG. **4**, in an exemplary embodiment, the overall shape of the unit electrode is a quadrangle, and the unit electrode includes a cross stem including a horizontal stem **193** and a vertical stem **192** substantially perpendicular to each other. In such an embodiment, the unit electrode is divided into a first subregion Da, a second subregion Db, a third subregion Dc and a fourth subregion Dd by the horizontal stem **193** and the vertical stem **192**, and the first to fourth subregions Da to Dd include a plurality of first minute branches **194***a*, a plurality of second minute branches **194***b*, a plurality of third minute branches **194***c*, and a plurality of fourth minute branches **194***d*, respectively.

[0108] The first minute branch **194***a* extends obliquely in an upper left direction from the horizontal stem **193** or the vertical stem **192**, and the second minute branch **194***b* extends obliquely in an upper right direction from the horizontal stem **193** or the vertical stem **192**. The third minute branch **194***c* extends obliquely in a lower left direction from the horizontal stem **193** or the vertical stem **192**, and the fourth minute branch **194***d* extends obliquely in a lower right direction from the horizontal stem **193** or the vertical stem **192**.

[0109] In an exemplary embodiment, the first to fourth minute branches **194***a*, **194***b*, **194***c* and **194***d* form angles of about 45 or 135 degrees with the gate line **121** or the horizontal stem **193**. In such an embodiment, the minute branches **194***a*, **194***b*, **194***c* and **194***d* of two adjacent subregions Da, Db, Dc and Dd are substantially perpendicular to each other.

[0110] In an exemplary embodiment, widths of the minute branches **194***a*, **194***b*, **194***c*, and **194***d* may be in a range of about 2.5 micrometers (μm) to about 5.0 μm, and a distance between the adjacent minute branches **194***a*, **194***b*, **194***c* and **194***d* in each subregion Da, Db, Dc or Dd may be in a range of about 2.5 μm to about 5.0 μm.

[0111] According to an alternative exemplary embodiment of the invention, the widths of the minute branches **194***a*, **194***b*, **194***c* and **194***d* may be increased as being closer to the horizontal stem **193** or the vertical stem **192**, and a difference between the largest portion and the smallest portion in the width of each minute branches **194***a*, **194***b*, **194***c* or **194***d* may be in a range of about 0.2 μm to about 1.5 μm.

[0112] Referring back to FIGS. **2** and **3**, the first subpixel electrode **191***a* and the second subpixel electrode **191***b* are connected to the first drain electrode **175***a* and the second drain electrode **175***b*, respectively, through the first contact hole **185***a* and the second contact hole **185***b*, respectively, and receive the data voltages from the first drain electrode **175***a* and the second drain electrode **175***b*, respectively. In an exemplary embodiment, sides of the first to fourth minute branches **194***a*, **194***b*, **194***c* and **194***d* distort the electric field to generate horizontal components that determine inclined directions of the liquid crystal molecules **31**. The horizontal components of the electric field are substantially parallel to the sides of the first to fourth minute branches **194***a*, **194***b*, **194***c* and **194***d*. Accordingly, as illustrated in FIG. **4**, the liquid crystal molecules **31** are inclined in directions substantially parallel to longitudinal directions of the minute branches **194***a*, **194***b*, **194***c* and **194***d*. In such an embodiment, as each unit pixel electrode **191** includes four subregions, e.g., the first to fourth subregions Da to Dd, having different longitudinal directions of the minute branches **194***a*, **194***b*, **194***c* and **194***d*, the inclined directions of the liquid crystal molecules **31** are substantially four directions, and four domains having different alignment directions of the liquid crystal molecules **31** are provided on the liquid crystal layer **3**. In such an embodiment, when the inclined directions of the liquid crystal molecules are various, a reference viewing angle of the liquid crystal display is substantially increased.

[0113] Now, an method of an initial alignment of the liquid crystal molecules **31** having pretilts will be described with reference to FIG. **5**.

[0114] FIG. **5** is a diagram illustrating a process in which liquid crystal molecules have pretilts using a prepolymer polymerized by light such as ultraviolet light.

[0115] First, a prepolymer **33**, such as monomers cured by polymerization due to light such as ultraviolet light, is injected between the lower and upper panels **100** and **200** together with a liquid crystal material. The prepolymer **33** may be reactive mesogen polymerized by the light such as ultraviolet light. The prepolymer **33** may be injected in the alignment layer disposed on the lower panel **100** or the upper panel **200**.

[0116] Next, the data voltages are applied to the first subpixel electrode **191***a* and the second subpixel electrode **191***b* and common voltage is applied to the common electrode **270** of the upper panel **200** to generate the electric field in the

liquid crystal layer **3** between the lower and upper panels **100** and **200**. Then, the liquid crystal molecules **31** of the liquid crystal layer **3** are inclined in the directions substantially parallel to the longitudinal directions of the minute branches **194***a*, **194***b*, **194***c* and **194***d* in response to the electric field through the processes described above, and the liquid crystal molecules **31** are provided to have total four inclined directions in a unit pixel.

[0117] When the electric field is generated and then the light such as ultraviolet light is irradiated in the prepolymer **33**, the prepolymer **33** is polymerized to form a polymer **370** as illustrated in FIG. **5**. The polymer **370** is formed to contact the panels **100** and **200**. Alignment directions of the liquid crystal molecules **31** are determined to have pretilts in the directions described above. Accordingly, in a state where the voltage is not applied to the field generating electrodes **191** and **270**, the liquid crystal molecules **31** are aligned to have pretilts in four different directions. However, the polymer **370** is formed in the liquid crystal layer **3** or in the alignment layer disposed on the lower panel **100** or the upper panel **200**.

[0118] Hereinafter, a detailed layout of the first light blocking member **220** and the second light blocking member **330** of an exemplary embodiment of the liquid crystal display according to the invention will be described with reference to FIGS. **6** to **10**. FIG. **6** is a top plan view of two pixels of an exemplary embodiment of the liquid crystal display according to the invention, FIG. **7** is a cross-sectional view taken along line VII-VII of the liquid crystal display of FIG. **6**, FIG. **8** is a cross-sectional view taken along line VIII-VIII of the liquid crystal display of FIG. **6**, and FIG. **9** is a cross-sectional view taken along line IX-IX of the liquid crystal display of FIG. **6**. FIG. **10** is a cross-sectional view taken along line X-X of the liquid crystal display of FIG. **6**.

[0119] Referring to FIGS. **6** to **10**, in an exemplary embodiment, the color filter **230**, the first light blocking member **220** and the second light blocking member **330** of the liquid crystal display are positioned on the lower panel **100** with the first to third thin film transistors Qa, Qb and Qc. In such an embodiment, light leakage due to arrangement error between the lower and upper substrates **100** and **200** is effectively prevented by providing the color filter, the light blocking member and the thin film transistor in a same substrate, e.g., the lower substrate **100**.

[0120] In such an embodiment, the color filter **230** is positioned between two adjacent data lines **171**, and the first light blocking member **220** extends along each of the two adjacent data lines **171** positioned at both sides of the pixel electrode **191**. In an exemplary embodiment, a width of the first light blocking member **220** may be greater than a width of the data line **171**. In such an embodiment, where the width of the first light blocking member **220** is greater than the width of the data line **171**, light incident from the outside is effectively prevented from being reflected onto the surface of the data line **171** including metal and interfering with the light passing through the liquid crystal layer **3**, such that a contrast ratio of the liquid crystal display is substantially improved.

[0121] The second light blocking member **330** is disposed to cover substantially an entire of a region, in which the first transistor Qa, the second transistor Qb, the third transistor Qc and the first to third contact holes **185***a*, **185***b*, and **185***c* are positioned, and the second light blocking member **330** extends substantially in the same direction as the gate line **121** and crossing the data line **171**, e.g., overlapping a portion of the data line **171**. The second light blocking member **330** overlaps at least a portion of each of the two data lines **171**, which are disposed at both sides of a corresponding pixel area, such that light leakage that may occur around the data line **171**, the gate line **121** and the divided reference voltage line **131** is effectively prevented, and light leakage in the region, where the first transistor Qa, the second transistor Qb and the third transistor Qc are positioned, is effectively prevented.

[0122] In an exemplary embodiment, the second light blocking member **330** may be provided after providing the first passivation layer **180***p*, the color filter **230** and the second passivation layer **180***q* in the region where the first transistor Qa, the second transistor Qb, the third transistor Qc and the first to third contact holes **185***a*, **185***b* and **185***c* are positioned, such that the positions of the first transistor Qa, the second transistor Qb, the third transistor Qc and the first to third contact holes **185***a*, **185***b* and **185***c* are efficiently distinguished. In such an embodiment, when defects occur in the first transistor Qa, the second transistor Qb and the third transistor Qc during the manufacturing process, the defects of the first transistor Qa, the second transistor Qb and the third transistor Qc may be repaired before the second light blocking member **330** is provided. In such an embodiment, the color filter **230** is provided in the region, where the first transistor Qa, the second transistor Qb and the third transistor Qc are positioned and covered by the second light blocking member **330** after repairing the defects, to effectively prevent the light leakage, such that the light leakage in the region adjacent to the data line and the gate line is effectively prevented, a performance characteristic of the thin film transistor is substantially improved by not forming an unnecessary thin film to compensate the step of the light blocking member which may occur in the case where the color filter is disposed on the thin film transistor and the light blocking member is disposed on the periphery of the thin film transistor to efficiently repair the thin film transistor. In such an embodiment, light leakage due to the arrangement error is effectively prevented by providing the color filter and the light blocking member on the lower panel **100**, e.g., the thin film transistor array panel.

[0123] Referring to FIG. **7**, a height of an overlapping portion **324** of the first light blocking member **220** and the second light blocking member **330** positioned on the data line **171** is greater than a height of the second light blocking member **330** positioned at another portion. Accordingly, the overlapping portion **324** of the first light blocking member **220** and the second light blocking member **330** may be spaced apart from the upper panel **200** opposed thereto by a first distance H1.

[0124] Referring to FIG. **9**, the second light blocking member **330** includes a first spacer part **325** having a larger thickness than a peripheral portion thereof. The first spacer part **325** is disposed to contact the upper panel **200**. In an exemplary embodiment, the peripheral portion of the second light blocking member **330** and the first spacer part **325** are disposed on the same layer, e.g., on the second passivation layer **180***q*, such that a manufacturing process is substantially simplified and light leakage that may occur around the first spacer part **325** is effectively prevented.

[0125] In an exemplary embodiment, the second light blocking member **330** extends in a horizontal direction in the region where the first transistor Qa, the second transistor Qb, the third transistor Qc and the first to third contact holes **185***a*, **185***b* and **185***c* are positioned. In such an embodiment, the liquid crystal molecules **31** disposed between the region with

the second light blocking member **330** and the region with the pixel electrode **191** may be inclined toward the pixel electrode **191** by the second light blocking member **330** such that irregular movement of the liquid crystal molecules **31** disposed between the pixel electrode **191** and the second light blocking member **330** is substantially reduced.

[0126] As described above, in an exemplary embodiment, the first spacer part **325** may serve to maintain a cell gap between the lower and upper panels **100** and **200** of the liquid crystal display, and as described with reference to FIG. **7**, the overlapping portion **324** of the first light blocking member **220** and the second light blocking member **330** may serve to maintain the cell gap when pressure or the like is applied from the outside.

[0127] In an exemplary embodiment, referring to FIG. **10**, the second light blocking member **330** may include a second spacer part **326**. A thickness of the second spacer part **326** is greater than a thickness of the peripheral portion of the second light blocking member **330**, but may be less than the thickness of the first spacer part **325**. The second spacer part **326** may be spaced apart from the upper panel **200** opposed thereto by a second distance H2. In such an embodiment, the second spacer part **326** may serve to maintain a cell gap when the pressure or the like is applied from the outside.

[0128] As described above with reference to FIG. **7**, as the overlapping portion **324** of the first light blocking member **220** and the second light blocking member **330** maintains the cell gap when the pressure or the like is applied from the outside, the second spacer part **326** of the second light blocking member **330** may be omitted in an alternative exemplary embodiment. In such an embodiment where the second light blocking member **330** does not include the second spacer part **326**, the second light blocking member **330** may be provided to have two different thicknesses at the first spacer part **325** and the peripheral area thereof such that the step is easily controlled and thus accuracy in the process is improved and manufacturing costs are reduced, as compared with an embodiment where the second light blocking member **330** have three portions having three different thicknesses by having both the first spacer part **325** and the second spacer part **326**.

[0129] In an exemplary embodiment, as shown in FIG. **6**, at least one of the first spacer part **325** and the second spacer part **326** may be disposed in each pixel area. In an alternative exemplary embodiment, one of the first spacer part **325** and the second spacer part **326** are provided not in all of the pixel areas, but in some pixel areas of the pixel areas.

[0130] Now, an alternative exemplary embodiment of a liquid crystal display according to the invention will be described with reference to FIGS. **11** to **14**. FIG. **11** is a cross-sectional view of an alternative exemplary embodiment of the liquid crystal display according to the invention, which corresponds to a cross-sectional view taken along line III-III of the liquid crystal display of FIG. **2**. FIGS. **12** to **14** are cross-sectional views of an alternative exemplary embodiment of the liquid crystal display according to the invention, which correspond to cross-sectional views taken along lines VII-VII, VIII-VIII and IV-IV of the liquid crystal display of FIG. **6**.

[0131] The liquid crystal display of FIGS. **11** to **14** is substantially the same as the liquid crystal display of FIGS. **2**, **3** and **6** to **10** except the second passivation layer **180***q*. The same or like elements shown in FIGS. **11** to **14** have been labeled with the same reference characters as used above to describe the exemplary embodiments of the liquid crystal display shown in FIGS. **2**, **3** and **6** to **10**, and any repetitive detailed description thereof will hereinafter be omitted or simplified.

[0132] In an exemplary embodiment, as shown in FIGS. **11** to **14**, the second passivation layer **180***q* includes a lower layer **180***qa* and an upper layer **180***qb*. The lower layer **180***qa* of the second passivation layer **180***q* includes an organic insulating layer, and the upper layer **180***qb* of the second passivation layer **180***q* includes an inorganic insulating layer such as silicon nitride or silicon oxide, for example. In an alternative exemplary embodiment of the invention, the lower layer **180***qa* of the second passivation layer **180***q* may include an inorganic insulating layer, and the upper layer **180***qb* of the second passivation layer **180***q* may include an organic insulating layer.

[0133] As described above, an exemplary embodiment of the liquid crystal display according to the invention includes the color filter **230** disposed between the two adjacent data lines **171**, the first light blocking member **220** disposed along the data line **171**, and the second light blocking member **330** disposed on the color filter **220** covering the thin film transistors, and the first light blocking member **220** and the second light blocking member **330** are overlapping each other. Accordingly, light leakage in the region adjacent to the data line and the gate line is effectively prevented while the light leakage due to the arrangement error is effectively prevented by providing the color filter and the light blocking member on the thin film transistor array panel, e.g., the lower panel **100**, and a performance characteristic of the thin film transistor is substantially improved by not forming an unnecessary thin film to compensate the step of the light blocking member which may occur in the case where the color filter is disposed on the thin film transistor and the light blocking member is disposed on the periphery of the thin film transistor to efficiently repair the thin film transistor.

[0134] In such an embodiment, the overlapping portion of the first light blocking member and the second light blocking member serve as the spacer, and the manufacturing process is substantially simplified without a process for providing a sub spacer.

[0135] Other features of the liquid crystal display described with reference to FIGS. **2**, **3**, and **6** to **10** may be applied to the exemplary embodiment of the liquid crystal display of FIGS. **11** to **14**.

[0136] Now, another alternative exemplary embodiment of a liquid crystal display according to the invention will be described with reference to FIGS. **15** to **18**. FIG. **15** is a cross-sectional view of another alternative exemplary embodiment of a liquid crystal display according to the invention, which corresponds to a cross-sectional view taken along line III-III of the liquid crystal display of FIG. **2**. FIGS. **16** to **18** are cross-sectional views of another alternative exemplary embodiment of the liquid crystal display according to the invention, which correspond to the cross-sectional views taken along lines VII-VII, VIII-VIII and IV-IV of the liquid crystal display of FIG. **6**.

[0137] The liquid crystal display of FIGS. **15** to **18** is substantially the same as the liquid crystal display shown in FIGS. **2**, **3** and **6** to **10**. The same or like elements shown in FIGS. **15** to **18** have been labeled with the same reference characters as used above to describe the exemplary embodiments of the liquid crystal display shown in FIGS. **2**, **3** and **6**

to **10**, and any repetitive detailed description thereof will hereinafter be omitted or simplified.

[0138] In an exemplary embodiment of the liquid crystal display, as shown in FIGS. **15** to **18**, the second passivation layer **180***q* may be omitted.

[0139] As described above, an exemplary embodiment of the liquid crystal display according to the invention includes the color filter **230** disposed between the two adjacent data lines **171**, the first light blocking member **220** disposed along the data line **171**, and the second light blocking member **330** disposed on the color filter **220** covering the thin film transistors, and the first light blocking member **220** and the second light blocking member **330** are overlapping each other. Accordingly, light leakage in the region adjacent to the data line and the gate line is effectively prevented while the light leakage due to the arrangement error is effectively prevented by providing the color filter and the light blocking member on the thin film transistor array panel, e.g., the lower panel **100**, and a performance characteristic of the thin film transistor is substantially improved by not forming an unnecessary thin film to compensate the step of the light blocking member which may occur in the case where the color filter is disposed on the thin film transistor and the light blocking member is disposed on the periphery of the thin film transistor to efficiently repair the thin film transistor.

[0140] In such an embodiment, the overlapping portion of the first light blocking member and the second light blocking member serve as the spacer, and the manufacturing process is substantially simplified without a process for providing a sub space.

[0141] Other features of the liquid crystal display described with reference to FIGS. **2**, **3**, and **6** to **10** may be applied to the exemplary embodiment of the liquid crystal display of FIGS. **15** to **18**.

[0142] Then, another alternative exemplary embodiment of a liquid crystal display according to the invention will be described with reference to FIGS. **19** to **22**. FIG. **19** is a cross-sectional view of another alternative exemplary embodiment of a liquid crystal display according to the invention, which corresponds to a cross-sectional view taken along line III-III of the liquid crystal display of FIG. **2**. FIGS. **20** to **22** are cross-sectional views of another alternative exemplary embodiment of the liquid crystal display according to the invention, which correspond to cross-sectional views taken along lines VII-VII, VIII-VIII and IV-IV of the liquid crystal display of FIG. **6**.

[0143] The liquid crystal display of FIGS. **19** to **22** is substantially the same as the liquid crystal display of FIGS. **2**, **3**, and **6** to **10** except for the second passivation layer **180***q*. The same or like elements shown in FIGS. **19** to **22** have been labeled with the same reference characters as used above to describe the exemplary embodiments of the liquid crystal display shown in FIGS. **2**, **3** and **6** to **10**, and any repetitive detailed description thereof will hereinafter be omitted or simplified.

[0144] In an exemplary embodiment of the liquid crystal display, as shown in FIGS. **19** to **22**, a portion of the second passivation layer **180***q* near the overlapping portion of the first light blocking member **220** and the second light blocking member **330** may be omitted.

[0145] As described above, an exemplary embodiment of the liquid crystal display according to the invention includes the color filter **230** disposed between the two adjacent data lines **171**, the first light blocking member **220** disposed along the data line **171**, and the second light blocking member **330** disposed on the color filter **220** covering the thin film transistors, and the first light blocking member **220** and the second light blocking member **330** are overlapping each other. Accordingly, light leakage in the region adjacent to the data line and the gate line is effectively prevented while the light leakage due to the arrangement error is effectively prevented by providing the color filter and the light blocking member on the thin film transistor array panel, e.g., the lower panel **100**, and a performance characteristic of the thin film transistor is substantially improved by not forming an unnecessary thin film to compensate the step of the light blocking member which may occur in the case where the color filter is disposed on the thin film transistor and the light blocking member is disposed on the periphery of the thin film transistor to efficiently repair the thin film transistor.

[0146] In such an embodiment, the overlapping portion of the first light blocking member and the second light blocking member serve as the spacer, and the manufacturing process is substantially simplified without a process for providing a sub space.

[0147] Other features of the liquid crystal display described with reference to FIGS. **2**, **3** and **6** to **10** may be applied to the exemplary embodiment of the liquid crystal display of FIGS. **19** to **22**.

[0148] Then, another alternative exemplary embodiment of a liquid crystal display according to the invention will be described with reference to FIGS. **23** to **26**. FIG. **23** is a top plan view illustrating two pixels of another alternative exemplary embodiment of the liquid crystal display according to the invention. FIG. **24** is a cross-sectional view taken along line XXIV-XXIV of the liquid crystal display of FIG. **23**. FIG. **25** is a cross-sectional view taken along line XXV-XXV of the liquid crystal display of FIG. **23**. FIG. **26** is a cross-sectional view taken along line XXVI-XXVI of the liquid crystal display of FIG. **23**.

[0149] The liquid crystal display of FIGS. **23** to **26** is substantially the same as the liquid crystal display shown in FIGS. **2**, **3** and **6** to **10** except for the first light blocking member **220**. The same or like elements shown in FIGS. **23** to **26** have been labeled with the same reference characters as used above to describe the exemplary embodiments of the liquid crystal display shown in FIGS. **2**, **3** and **6** to **10**, and any repetitive detailed description thereof will hereinafter be omitted or simplified.

[0150] In an exemplary embodiment, as shown in FIGS. **23** to **26**, a width of the first light blocking member **220** of the liquid crystal display has a first width W1 in an overlapping region, at which the first light blocking member **220** overlaps the second light blocking member **330**, and the first light blocking member **220** has a second width W2 in the other regions thereof. In such an embodiment, the first width W1 is less than the second width W2. In one exemplary embodiment, for example, the second width W2 of the first light blocking member **220** may be about 7 μm, and the first width W1 may be greater than the width of the data line **171**.

[0151] In such an embodiment, the height of an upper surface of the first light blocking member **220** at the overlapping portion of the first light blocking member **220** and the second light blocking member **330** on the data line **171** may be reduced by decreasing the width of the first light blocking member **220** at the overlapping portion of the first light blocking member **220** and the second light blocking member **330**. In one exemplary embodiment, for example, a step between

the overlapping portion of the first light blocking member **220** and the second light blocking member **330** and the peripheral area may be about 0.8 μm or less.

[0152] In such an embodiment, the step between the peripheral area and the overlapping portion **324** of the first light blocking member **220** and the second light blocking member **330** is decreased by decreasing the height of the upper surface of the overlapping portion **324** of the first light blocking member **220** and the second light blocking member **330** such that irregular movement of the liquid crystal molecules, which may occur in the overlapping portion **324** of the first light blocking member **220** and the second light blocking member **330**, is substantially reduced, and light leakage due to the irregular movement of the liquid crystal molecules is thereby effectively prevented.

[0153] In such an embodiment, as shown in FIG. **25**, in the first light blocking member **220**, a width of the first light blocking member **220** which is not overlapping the second light blocking member **330** is greater than the width of the data line **171** such that the first light blocking member **220** effectively prevents the light incident from the outside from being reflected onto the surface of the data line **171** including metal. Accordingly, the light is effectively prevented from being reflected onto the surface of the data line **171**, which interferes with the light passing through the liquid crystal layer **3**, and a contrast ratio of the liquid crystal display is thereby effectively prevented from deteriorating.

[0154] In an exemplary embodiment, as shown in FIGS. **23** to **26**, the second passivation layer **180***q* may be a single layer, but not being limited thereto. In an alternative exemplary embodiment of the liquid crystal display according to the invention, the second passivation layer **180***q* includes a lower layer and an upper layer. In such an embodiment, the lower layer of the second passivation layer **180***q* may include an organic insulating layer, and the upper layer of the second passivation layer **180***q* may include an inorganic insulating layer such as silicon nitride or silicon oxide. In an alternative exemplary embodiment, the lower layer of the second passivation layer **180***q* may include an inorganic insulating layer, and the upper layer of the second passivation layer **180***q* may include an organic insulating layer.

[0155] In another alternative exemplary embodiment of the invention, the second passivation layer **180***q* may be omitted. In one exemplary embodiment, for example, the second passivation layer **180***q* may also be omitted only at the overlapping portion of the first light blocking member **220** and the second light blocking member **330**.

[0156] Other features of the liquid crystal display described with reference to FIGS. **2**, **3** and **6** to **10** may be applied to the exemplary embodiment of the liquid crystal display of FIGS. **23** to **26**.

[0157] Hereinafter, an alternative exemplary embodiment of a liquid crystal display according to the invention will be described with reference to FIGS. **27** to **31**. FIG. **27** is a top plan view illustrating two pixels of another alternative exemplary embodiment of a liquid crystal display according to the invention. FIG. **28** is a cross-sectional view taken along line XXVIII-XXVIII of the liquid crystal display of FIG. **27**. FIG. **29** is a cross-sectional view taken along line XXIX-XXIX of the liquid crystal display of FIG. **27**. FIG. **30** is a cross-sectional view taken along line XXX-XXX of the liquid crystal display of FIG. **27**. FIG. **31** is a cross-sectional view taken along line XXXI-XXXI of the liquid crystal display of FIG. **27**.

[0158] The liquid crystal display of FIGS. **27** to **31** is substantially the same as the liquid crystal display shown in FIGS. **2**, **3**, and **6** to **10** and the liquid crystal display shown in FIGS. **23** to **26** except for the first light blocking member **220**. The same or like elements shown in FIGS. **27** to **31** have been labeled with the same reference characters as used above to describe the exemplary embodiments of the liquid crystal display shown in FIGS. **2**, **3** and **6** to **10**, and any repetitive detailed description thereof will hereinafter be omitted or simplified.

[0159] In an exemplary embodiment of the liquid crystal display, as shown in FIGS. **27** to **31**, the first light blocking member **220** is partially removed at the overlapping portion of the second light blocking member **330** and the data line **171**. In an exemplary embodiment, a height of the first light blocking member **220** at the overlapping portion is decreased as being closer to a center of the second light blocking member **330**. In such an embodiment, the height of the first light blocking member **220** has a first thickness D1 at the portion which is not overlapping the second light blocking member **330** and may have a second thickness D2 at the portion which is overlapping the second light blocking member **330**. The first thickness D1 is greater than the second thickness D2. In an exemplary embodiment, the first light blocking member **220** is substantially removed at the horizontal center of the overlapping portion of the second light blocking member **330** and the data line **171**. In one exemplary embodiment, for example, the height of the first light blocking member **220** may be about zero (0) at the center of the overlapping portion of the second light blocking member **330** and the data line **171**.

[0160] In such an embodiment, the first light blocking member **220** is partially removed at the overlapping portion of the second light blocking member **330** and the data line **171**, and a thickness of an end of the first light blocking member **220** is gradually decreased to reduce a step difference due to the overlapping of the first light blocking member **220** and the second light blocking member **330** on the data line **171** such that irregular movement of the liquid crystal molecules, which may occur in the overlapping portion **324** of the first light blocking member **220** and the second light blocking member **330**, is effectively prevented, and light leakage due to the irregular movement of the liquid crystal molecules is thereby effectively prevented. In an exemplary embodiment, a step between the overlapping portion of the first light blocking member **220** and the second light blocking member **330** and the peripheral area may be about 0.8 μm or less.

[0161] In such an embodiment, as shown in FIG. **30**, the width of the first light blocking member **220** may be greater than the width of the data line **171** such that the first light blocking member **220** may effectively prevent the light incident from the outside from being reflected onto the surface of the data line **171** including metal. In such an embodiment, a contrast ratio of the liquid crystal display is effectively prevented from deteriorating by the light that is reflected onto the surface of the data line **171** and interferes with the light passing through the liquid crystal layer **3**.

[0162] In the exemplary embodiment illustrated in FIGS. **27** to **31**, the second passivation layer **180***q* is illustrated as a single layer, but not being limited thereto. In an alternative exemplary embodiment, the second passivation layer **180***q* includes a lower layer and an upper layer. In such an embodiment, the lower layer of the second passivation layer **180***q*

may include an organic insulating layer, and the upper layer of the second passivation layer **180***q* may include an inorganic insulating layer such as silicon nitride or silicon oxide, for example. In an alternative exemplary embodiment, the lower layer of the second passivation layer **180***q* may include an inorganic insulating layer, and the upper layer of the second passivation layer **180***q* may include an organic insulating layer.

[0163] In an alternative exemplary embodiment, the second passivation layer **180***q* may be omitted. In such an embodiment, the second passivation layer **180***q* may be omitted only at the overlapping portion of the first light blocking member **220** and the second light blocking member **330**.

[0164] As described above, an exemplary embodiment of the liquid crystal display according to the invention includes the color filter **230** disposed between the two adjacent data lines **171**, the first light blocking member **220** disposed along the data line **171**, and the second light blocking member **330** disposed on the color filter **220** covering the thin film transistors, and the first light blocking member **220** and the second light blocking member **330** are overlapping each other. Accordingly, light leakage in the region adjacent to the data line and the gate line is effectively prevented while the light leakage due to the arrangement error is effectively prevented by providing the color filter and the light blocking member on the thin film transistor array panel, e.g., the lower panel **100**, and a performance characteristic of the thin film transistor is substantially improved by not forming an unnecessary thin film to compensate the step of the light blocking member which may occur in the case where the color filter is disposed on the thin film transistor and the light blocking member is disposed on the periphery of the thin film transistor to efficiently repair the thin film transistor.

[0165] In such an embodiment, the overlapping portion of the first light blocking member and the second light blocking member serve as the spacer, and the manufacturing process is substantially simplified without a process for providing a sub spacer.

[0166] Further, a step difference at the periphery due to the overlapping of the first light blocking member and the second light blocking member is reduced such that irregular movement of the liquid crystal molecules, which may occur in the overlapping portion of the first light blocking member and the second light blocking member, is effectively prevented, and light leakage due to the irregular movement of the liquid crystal molecules is thereby effectively prevented.

[0167] In the illustrated exemplary embodiments described above, the third switching element Qc connected to the second liquid crystal capacitor Clcb and the divided reference voltage line RL is included to differentiate the voltage charged in the first liquid crystal capacitor Clca and the voltage charged in the second liquid crystal capacitor Clcb, but being limited thereto. In an alternative exemplary embodiment of the invention, the second liquid crystal capacitor Clcb may be connected to a step-down capacitor. In such an embodiment, the third switching element including a first terminal connected to a step-down gate line, a second terminal connected to the second liquid crystal capacitor Clcb and a third terminal connected to the step-down capacitor is included to charge some of charges charged in the second liquid crystal capacitor Clcb in the step-down capacitor, such that the charged voltages between the first liquid crystal capacitor Clcb and the second liquid crystal capacitor Clcb may be differently set. In another alternative exemplary embodiment, the first liquid crystal capacitor Clcb and the second liquid crystal capacitor Clcb are connected to different data lines, respectively, to receive different data voltages such that the charged voltages between the first liquid crystal capacitor Clcb and the second liquid crystal capacitor Clcb may be differently set. In an exemplary embodiment, the charged voltages between the first liquid crystal capacitor Clcb and the second liquid crystal capacitor Clcb may be differently set by various different methods.

[0168] Then, another alternative exemplary embodiment of a liquid crystal display according to the invention liquid crystal display will be described with reference to FIGS. **32** to **36**. FIG. **32** is a top plan view of two pixels of another alternative exemplary embodiment of the liquid crystal display according to the invention. FIG. **33** is a cross-sectional view taken along line XXXIII-XXXIII of the liquid crystal display of FIG. **32**. FIG. **34** is a cross-sectional view taken along line XXXIV-XXXIV of the liquid crystal display of FIG. **32**. FIG. **35** is a cross-sectional view taken along line XXXV-XXXV of the liquid crystal display of FIG. **32**. FIG. **36** is a cross-sectional view taken along line XXXVI-XXXVI of the liquid crystal display of FIG. **32**.

[0169] The liquid crystal display of FIGS. **32** to **36** is substantially the same as the liquid crystal display shown in FIGS. **6** to **10** except the data lines. The same or like elements shown in FIGS. **32** to **36** have been labeled with the same reference characters as used above to describe the exemplary embodiments of the liquid crystal display shown in FIGS. **6** to **10**, and any repetitive detailed description thereof will hereinafter be omitted or simplified.

[0170] In an exemplary embodiment, as shown in FIG. **32**, two data lines including a first data line **171***a* and a second data line **171***b* are positioned between two pixels. The first data line **171***a* is positioned at a left side of a pixel, and the second data line **171***b* is positioned at a right side of the pixel. The first subpixel electrode **191***a* of each pixel receives data voltage from the first source electrode **173***a* connected to the first data line **171***a* and receives data voltage from the second source electrode **173***b* connected to the second data line **171***b*.

[0171] In an exemplary embodiment, the first thin film transistor, which is defined by the first gate electrode **124***a* extending from the gate line **121**, the first semiconductor **154***a*, the first source electrode **173***a* connected to the first data line **171***a*, and the first drain electrode **175***a*, is connected to the first subpixel electrode **191***a*, and the second thin film transistor, which is defined by the second gate electrode **124***b* extending from the gate line **121**, the second semiconductor **154***b*, the second source electrode **173***b* connected to the second data line **171***b*, and the second drain electrode **175***b*, is connected to the second subpixel electrode **191***b*. The first subpixel electrode **191***a* is connected to the first drain electrode **175***a* through the first contact hole **185***a* to receive the data voltage from the first drain electrode **175***a*, and the second subpixel electrode **191***b* is connected to the second drain electrode **175***b* through the second contact hole **185***b* to receive the data voltage from the second drain electrode **175***b*.

[0172] Referring to FIGS. **32** and **33**, the first light blocking member **220** is positioned between two color filters **230** positioned at two pixels, and positioned to cover the first data line **171***a* and the second data line **171***b* positioned between the two pixels. A height of the overlapping portion of the first light blocking member **220** and the second light blocking member **330** positioned on the first data line **171***a* and the second data line **171***b* is greater than a height of the second

light blocking member **330** positioned at other portions. Accordingly, the first data line **171***a* and the second data line **171***b*, and a first overlapping portion **324***a* of the first light blocking member **220** and the second light blocking member **330** may be spaced apart from the upper panel **200** opposed thereto by a third distance H1a.

[0173] In such an embodiment, similarly to the exemplary embodiments described above, the second light blocking member **330** of the liquid crystal display extends in a horizontal direction in a region where the thin film transistor connected to the first subpixel electrode **191***a* and the second subpixel electrode **191***b*, and the first and second contact holes **185***a* and **185***b* are positioned.

[0174] Referring to FIG. **35**, the second light blocking member **330** includes a first spacer part **325** in the middle area thereof and having a greater thickness than the other area thereof. The first spacer part **325** is disposed to contact the upper panel **200**. The second light blocking member **330** and the first spacer part **325** are disposed on a same layer such that the manufacturing process is simplified, and light leakage, which may occur around the first spacer part **325**, may be effectively prevented.

[0175] Referring to FIG. **36**, the second light blocking member **330** may include a second spacer part **326**. The second spacer part **326** is thicker than the second light blocking member **330** in the other area, but may be thinner than the first spacer part **325**. The second spacer part **326** may be spaced apart from the upper panel **200** opposed thereto by a second distance H2. The second spacer part **326** may serve to additionally maintain a cell gap when pressure or the like is applied from the outside.

[0176] In an alternative exemplary embodiment, the second spacer part **326** of the second light blocking member **330** may be omitted. In such an embodiment, where the second light blocking member **330** does not include the second spacer part **326**, the second light blocking member **330** may have two portions having different thicknesses by the first spacer part **325** and the other area thereof such that the step may be efficiently controlled and thus accuracy in the process is improved and manufacturing costs are reduced, as compared with the embodiment where the second light blocking member **330** has three portions having different thicknesses by the first spacer part **325** and the second spacer part **326**.

[0177] In an exemplary embodiment, the first spacer part **325** and the second spacer part **326** described above may not be provided in all of the pixel areas, but may be provided only in a portion of the plurality of pixel areas.

[0178] In an exemplary embodiment, as shown in FIG. **34**, the first light blocking member **220** is disposed to cover both the first data line **171***a* and the second data line **171***b*, which are adjacent to each other to be positioned between two pixels, such that the first light blocking member **220** effectively prevents the light incident from the outside from being reflected onto the surface of the data line **171** including metal. Accordingly, a contrast ratio of the liquid crystal display is effectively prevented from deteriorating by the light that is reflected onto the surface of the data line **171** and interferes with the light passing through the liquid crystal layer **3**.

[0179] In an exemplary embodiment, the width or the height of the first light blocking member **220** may be constant. In an alternative exemplary embodiment, similarly to the exemplary embodiment described with reference to FIGS. **23** to **26**, the width of the first light blocking member **220** may vary according to position, e.g., the width of the first light blocking member **220** in the remaining region may be greater than the width of the first light blocking member **220** in the region overlapping the second light blocking member **330**. In another alternative exemplary embodiment of the invention, similarly to the exemplary embodiment described with reference to FIGS. **27** to **31**, the first light blocking member **220** may be partially removed from the second light blocking member **330** at the overlapping portion of the first data line **171***a* and the second data line **171***b*, and the height of the first light blocking member **220** may be decreased as being closer to the center of the second light blocking member **330**.

[0180] In an exemplary embodiment, as shown in FIGS. **33** to **36**, the second passivation layer **180***q* may be a single layer, but not being limited thereto. In an alternative exemplary embodiment of the liquid crystal display according to the invention, the second passivation layer **180***q* may include a lower layer and an upper layer. In such an embodiment, the lower layer of the second passivation layer **180***q* may include an organic insulating layer, and the upper layer of the second passivation layer **180***q* may include an inorganic insulating layer such as silicon nitride or silicon oxide, for example. In another alternative exemplary embodiment, the lower layer of the second passivation layer **180***q* may include an inorganic insulating layer, and the upper layer of the second passivation layer **180***q* may include an organic insulating layer.

[0181] In another alternative exemplary embodiment, the second passivation layer **180***q* may be omitted, e.g., the second passivation layer **180***q* may also be omitted only at the overlapping portion of the first light blocking member **220** and the second light blocking member **330**.

[0182] Other features of the liquid crystal display shown in FIGS. **2**, **3** and **6** to **10**, the liquid crystal display shown in FIGS. **23** to **26**, and the liquid crystal display shown in FIGS. **27** to **31** may be applied to the exemplary embodiment of the liquid crystal display of FIGS. **32** to **36**.

[0183] Then, another alternative exemplary embodiment of a liquid crystal display according to the invention will be described with reference to FIGS. **37** to **39**. FIG. **37** is a top plan view of two pixels of another alternative exemplary embodiment of a liquid crystal display according to the invention. FIG. **38** is a cross-sectional view taken along line XXXVIII-XXXVIII of the liquid crystal display of FIG. **37**. FIG. **39** is a cross-sectional view of taken along line XXXIX-XXXIX the liquid crystal display of FIG. **37**.

[0184] The liquid crystal display of FIGS. **37** to **39** is substantially the same as the liquid crystal display shown in FIGS. **6** to **10** except that a shielding electrode. The same or like elements shown in FIGS. **37** to **39** have been labeled with the same reference characters as used above to describe the exemplary embodiments of the liquid crystal display shown in FIGS. **6** to **10**, and any repetitive detailed description thereof will hereinafter be omitted or simplified.

[0185] In an exemplary embodiment, as shown in FIGS. **37** to **39**, a shielding electrode **88** is disposed on the data line **171**. In such an embodiment, the shielding electrode **88** may receive common voltage and interrupt electromagnetic interference between the data line **171** and the pixel electrodes **191***a* and **191***b*, and between the data line **171** and the common electrode **270** such that voltage distortion of the pixel electrodes **191***a* and **191***b* and signal delay of the data voltage transferred by the data line **171** are substantially reduced.

[0186] Referring to FIG. **38**, similarly to the exemplary embodiment of the liquid crystal display shown in FIGS. **6** to **10**, the height of the overlapping portion **324** of the first light

blocking member **220** and the second light blocking member **330** positioned on the data line **171** is greater than the height of the second light blocking member **330** positioned at the remaining portion. Accordingly, the overlapping portion **324** of the first light blocking member **220** and the second light blocking member **330** may be spaced apart from the upper panel **200** opposed thereto by a first distance H1. When the pressure or the like is applied from the outside, the overlapping portion **324** of the first light blocking member **220** and the second light blocking member **330** may serve to additionally maintain the cell gap.

[0187] In an exemplary embodiment, the width of the first light blocking member **220** may be greater than the width of the data line **171**. In such an embodiment, where the width of the first light blocking member **220** is greater than the width of the data line **171**, light incident from the outside is effectively prevented from being reflected onto the surface of the data line **171** including metal, and a contrast ratio of the liquid crystal display is effectively prevented from deteriorating by the light that is reflected onto the surface of the data line **171** and interferes with the light passing through the liquid crystal layer **3**.

[0188] In an exemplary embodiment of the liquid crystal display, the width or the height of the first light blocking member **220** is not substantially changed according to a position, e.g., substantially constant, but not being limited thereto. In an alternative exemplary embodiment of the invention, similarly to the exemplary embodiment described with reference to FIGS. **23** to **26**, the width of the first light blocking member **220** in the remaining region may be greater than the width of the first light blocking member **220** in the region where the first light blocking member **220** overlapping the second light blocking member **330**. In another alternative exemplary embodiment of the invention, similarly to the exemplary embodiment described with reference to FIGS. **27** to **31**, the first light blocking member **220** may be partially removed from the second light blocking member **330** and the overlapping portion of the first data line **171***a* and the second data line **171***b*, and the height of the first light blocking member **220** may be decreased as being closer to the center of the second light blocking member **330**.

[0189] In an exemplary embodiment of the liquid crystal display, as shown in FIGS. **38** and **39**, the second passivation layer **180***q* may be a single layer, but not being limited thereto. In an alternative exemplary embodiment of the liquid crystal display according to the invention, the second passivation layer **180***q* includes a lower layer and an upper layer. In such an embodiment, the lower layer of the second passivation layer **180***q* may include an organic insulating layer, and the upper layer of the second passivation layer **180***q* may include an inorganic insulating layer such as silicon nitride or silicon oxide, for example. In another alternative exemplary embodiment of the invention, the lower layer of the second passivation layer **180***q* may include an inorganic insulating layer, and the upper layer of the second passivation layer **180***q* may include an organic insulating layer.

[0190] In an exemplary embodiment of the liquid crystal display according to the invention, the second passivation layer **180***q* may be omitted. In such an embodiment, the second passivation layer **180***q* may be omitted only at the overlapping portion of the first light blocking member **220** and the second light blocking member **330**.

[0191] Other features of the exemplary embodiment of the liquid crystal display described with reference to FIGS. **2**, **3** and **6** to **10**, the exemplary embodiment of the liquid crystal display described with reference to FIGS. **23** to **26**, and the exemplary embodiment of the liquid crystal display described with reference to FIGS. **27** to **31** may be applied to the exemplary embodiment of the liquid crystal display of FIGS. **37** to **39**.

[0192] While this invention has been described in connection with what is presently considered to be practical exemplary embodiments, it is to be understood that the invention is not limited to the disclosed embodiments, but, on the contrary, is intended to cover various modifications and equivalent arrangements included within the spirit and scope of the appended claims.

What is claimed is:

1. A liquid crystal display, comprising:

a first insulation substrate;

a gate line disposed on the first insulation substrate;

a first data line and a second data line disposed on the first insulation substrate;

a color filter disposed on the first insulation substrate and disposed between the first data line and the second data line;

a first light blocking member disposed on the first data line and the second data line; and

a second light blocking member disposed on the color filter and the first light blocking member, extending in the same direction as the gate line, and overlapping the first light blocking member on the first data line and the second data line.

2. The liquid crystal display of claim **1**, wherein

a width of the first light blocking member is substantially constant.

3. The liquid crystal display of claim **2**, wherein

the width of the first light blocking member is greater than a width of the second data line.

4. The liquid crystal display of claim **2**, wherein

the second light blocking member includes a first portion, a second portion and a third portion, and

thicknesses of the first, second and third portions are different from each other.

5. The liquid crystal display of claim **4**, further comprising:

a pixel electrode disposed on the color filter, wherein the pixel electrode comprises a first subpixel electrode and a second subpixel electrode separated from each other with the gate line disposed between the first and second subpixel electrodes;

a first thin film transistor connected to the first subpixel electrode; and

a second thin film transistor connected to the second subpixel electrode,

wherein the second light blocking member extends along the gate line and covers the first thin film transistor and the second thin film transistor.

6. The liquid crystal display of claim **5**, wherein

each of the first subpixel electrode and the second subpixel electrode comprises a plurality of stems, and a plurality of branch electrodes protruding from the stems.

7. The liquid crystal display of claim **2**, wherein

the second light blocking member includes a first portion and a second portion, and

thicknesses of the first and second portions are different from each other.

8. The liquid crystal display of claim **7**, wherein
the first portion contacts a surface of a thin film which is disposed on a second insulation substrate disposed opposite to the first insulation substrate.

9. The liquid crystal display of claim **8**, wherein
the second portion includes a first region overlapping the first light blocking member and a second region including a remainder of the second portion, and
a distance between the first region and the surface of the thin film disposed on the second insulation substrate is less than a distance between the second region and the surface of the thin film disposed on the second insulation substrate.

10. The liquid crystal display of claim **9**, further comprising:
a pixel electrode disposed on the color filter, wherein the pixel electrode comprises a first subpixel electrode and a second subpixel electrode separated from each other with the gate line disposed between the first and second subpixel electrodes;
a first thin film transistor connected to the first subpixel electrode; and
a second thin film transistor connected to the second subpixel electrode,
wherein the second light blocking member extends along the gate line and covers the first thin film transistor and the second thin film transistor.

11. The liquid crystal display of claim **10**, wherein
each of the first subpixel electrode and the second subpixel electrode comprises a plurality of stems and a plurality of branch electrodes protruding from the stems.

12. The liquid crystal display of claim **1**, further comprising:
a pixel electrode disposed on the color filter, wherein the pixel electrode comprises a first subpixel electrode and a second subpixel electrode separated from each other with the gate line disposed between the first and second subpixel electrodes;
a first thin film transistor connected to the first subpixel electrode; and
a second thin film transistor connected to the second subpixel electrode,
wherein the second light blocking member extends along the gate line and covers the first thin film transistor and the second thin film transistor.

13. The liquid crystal display of claim **12**, wherein
each of the first subpixel electrode and the second subpixel electrode comprises a plurality of stems and a plurality of branch electrodes protruding from the stems.

14. The liquid crystal display of claim **1**, wherein
a width of the first light blocking member at an overlapping portion of the first light blocking member and the second light blocking member is less than a width of a remaining portion of the first light blocking member.

15. The liquid crystal display of claim **14**, wherein
a width of the first light blocking member at a non-overlapping portion of the first light blocking member and the second light blocking member is greater than the width of the first data line and the width of the second data line.

16. The liquid crystal display of claim **14**, wherein
the width of the first light blocking member at an overlapping portion of the first light blocking member and the second light blocking member is about 0.7 micrometer.

17. The liquid crystal display of claim **14**, wherein
the second light blocking member includes a first portion, a second portion, and a third portion, and
thicknesses of the first, second and third portions are different from each other.

18. The liquid crystal display of claim **17**, further comprising:
a pixel electrode disposed on the color filter, wherein the pixel electrode comprises a first subpixel electrode and a second subpixel electrode separated from each other with the gate line disposed between the first and second subpixel electrodes;
a first thin film transistor connected to the first subpixel electrode; and
a second thin film transistor connected to the second subpixel electrode,
wherein the second light blocking member extends along the gate line and covers the first thin film transistor and the second thin film transistor.

19. The liquid crystal display of claim **18**, wherein
each of the first subpixel electrode and the second subpixel electrode comprises a plurality of stems and a plurality of branch electrodes protruding from the stems.

20. The liquid crystal display of claim **14**, further comprising:
a pixel electrode disposed on the color filter and including a first subpixel electrode and a second subpixel electrode separated from each other with the gate line disposed between the first and second subpixel electrodes;
a first thin film transistor connected to the first subpixel electrode; and
a second thin film transistor connected to the second subpixel electrode,
wherein the second light blocking member extends along the gate line and covers the first thin film transistor and the second thin film transistor.

21. The liquid crystal display of claim **20**, wherein
each of the first subpixel electrode and the second subpixel electrode comprises a plurality of stems and a plurality of branch electrodes protruding from the stems.

22. The liquid crystal display of claim **1**, wherein
a thickness of the first light blocking member is decreased toward a center of the second light blocking member from the overlapping portion of the first light blocking member and the second light blocking member.

23. The liquid crystal display of claim **22**, wherein
the thickness of the first light blocking member is about zero (0) micrometer at the center of the second light blocking member.

24. The liquid crystal display of claim **22**, wherein
the second light blocking member includes a first portion, a second portion, and a third portion, and
thicknesses of the first, second and third portions are different from each other.

25. The liquid crystal display of claim **24**, further comprising:
a pixel electrode disposed on the color filter, wherein the pixel electrode comprises a first subpixel electrode and a second subpixel electrode separated from each other with the gate line disposed between the first and second subpixel electrodes;
a first thin film transistor connected to the first subpixel electrode; and

a second thin film transistor connected to the second subpixel electrode,

wherein the second light blocking member extends along the gate line and covers the first thin film transistor and the second thin film transistor.

26. The liquid crystal display of claim **25**, wherein

each of the first subpixel electrode and the second subpixel electrode comprises a plurality of stems and a plurality of branch electrodes protruding from the stems.

27. The liquid crystal display of claim **22**, further comprising:

a pixel electrode disposed on the color filter, wherein the pixel electrode comprises a first subpixel electrode and a second subpixel electrode separated from each other with the gate line disposed between the first and second subpixel electrodes;

a first thin film transistor connected to the first subpixel electrode; and

a second thin film transistor connected to the second subpixel electrode,

wherein the second light blocking member extends along the gate line and covers the first thin film transistor and the second thin film transistor.

28. The liquid crystal display of claim **27**, wherein

each of the first subpixel electrode and the second subpixel electrode comprises a plurality of stems and a plurality of branch electrodes protruding from the stems.

* * * * *

专利名称(译)	液晶显示器		
公开(公告)号	US20140098315A1	公开(公告)日	2014-04-10
申请号	US13/839095	申请日	2013-03-15
[标]申请(专利权)人(译)	三星显示有限公司		
申请(专利权)人(译)	三星DISPLAY CO.，LTD.		
当前申请(专利权)人(译)	三星DISPLAY CO.，LTD.		
[标]发明人	JUNG HYUNG GI KIM SWAE HYUN YOON YEO GEON HONG SUNG HEE KIM HYUNG JUNE PARK JAE HWA SONG YOUNG GOO KIM SUNG HOON		
发明人	JUNG, HYUNG GI KIM, SWAE-HYUN YOON, YEO GEON HONG, SUNG HEE KIM, HYUNG JUNE PARK, JAE HWA SONG, YOUNG GOO KIM, SUNG HOON		
IPC分类号	G02F1/1362		
CPC分类号	G02F1/136209 G02F1/133345 G02F1/133753 G02F1/13394 G02F1/134363 G02F2001/134345 G02F2001/136222 G02F2001/136268 G02F1/133512 G02F1/134309 G02F1/1368		
优先权	1020120110866 2012-10-05 KR		
其他公开文献	US9207506		
外部链接	Espacenet USPTO		

摘要(译)
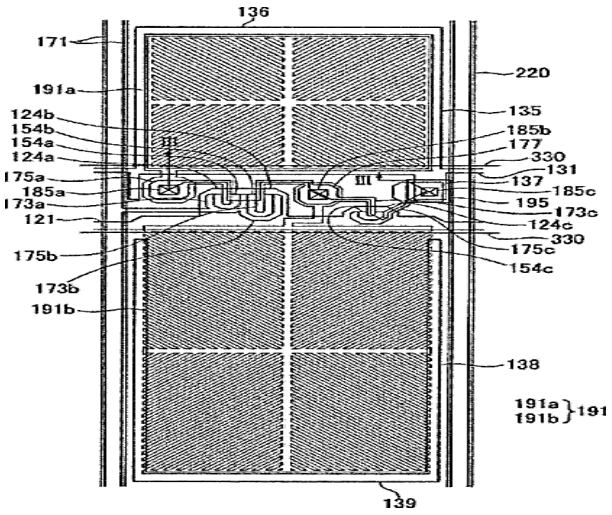
液晶显示器包括：第一绝缘基板;栅极线设置在第一绝缘基板上;第一数据线和第二数据线设置在第一绝缘基板上;滤色器，设置在第一绝缘基板上，设置在第一数据线和第二数据线之间;第一光阻挡构件，设置在第一数据线和第二数据线上;第二光阻挡构件，设置在滤色器和第一光阻挡构件上，沿与栅极线相同的方向延伸，并且在第一数据线和第二数据线上重叠第一光阻挡构件。