US007924252B2

(12) **United States Patent**
Akai et al.

(10) **Patent No.: US 7,924,252 B2**
(45) **Date of Patent: Apr. 12, 2011**

(54) **DISPLAY DRIVER**

(75) Inventors: **Akihito Akai**, Yokohama (JP); **Yasuyuki Kudo**, Fujisawa (JP); **Takuya Eriguchi**, Yokosuka (JP); **Kazuo Okado**, Kokubunji (JP)

(73) Assignee: **Renesas Electronics Corporation**, Kanagawa (JP)

(*) Notice: Subject to any disclaimer, the term of this patent is extended or adjusted under 35 U.S.C. 154(b) by 1021 days.

(21) Appl. No.: **11/443,224**

(22) Filed: **May 31, 2006**

(65) **Prior Publication Data**

US 2007/0057884 A1 Mar. 15, 2007

(30) **Foreign Application Priority Data**

Sep. 9, 2005 (JP) 2005-261924

(51) **Int. Cl.**
G09G 3/36 (2006.01)

(52) **U.S. Cl.** **345/89**

(58) **Field of Classification Search** ..... None
See application file for complete search history.

(56) **References Cited**

U.S. PATENT DOCUMENTS

6,249,270	B1 *	6/2001	Ito	345/100
7,193,637	B2 *	3/2007	Kudo et al.	345/690
2005/0052477	A1 *	3/2005	Kudo et al.	345/690
2005/0200591	A1 *	9/2005	Satoh et al.	345/103

FOREIGN PATENT DOCUMENTS

JP	2002-229520	8/2002
JP	2005-049868	2/2005
JP	2005-099665	4/2005
JP	2005-156962	6/2005

OTHER PUBLICATIONS

Office Action in Japanese Patent Application No. 2005/281924, dated Jul. 20, 2010 (in Japanese) [2 pages].

* cited by examiner

Primary Examiner — Alexander Eisen
Assistant Examiner — Robin Mishler
(74) *Attorney, Agent, or Firm* — Antonelli, Terry, Stout & Kraus, LLP.

(57) **ABSTRACT**

In consideration of the current leakage path of a liquid crystal panel and a signal line voltage fluctuation due to the current leakage path, a γ adjusting function (second driving method) is applied for each divided period in the first driving method. In a signal line driving unit, a gray scale voltage obtained by adding or subtracting a voltage fluctuation value different in each of the output periods of each gray scale is generated, and a gray scale voltage taking the voltage fluctuation value into consideration is applied to a signal line.

11 Claims, 9 Drawing Sheets

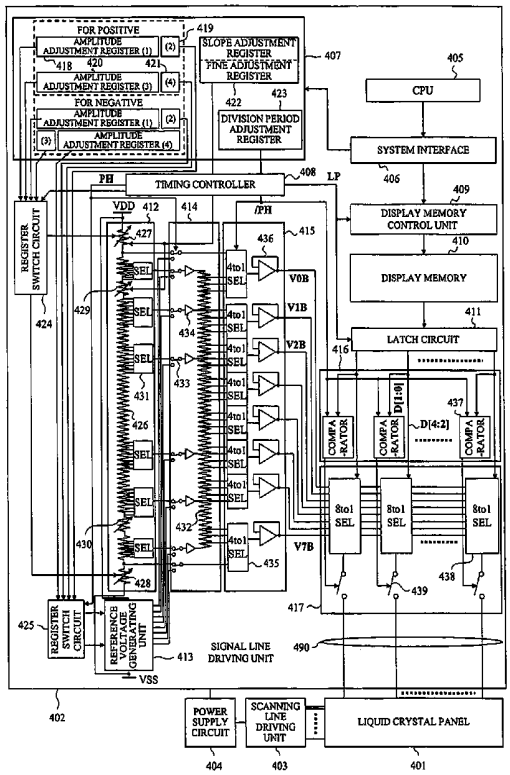

FIG. 1

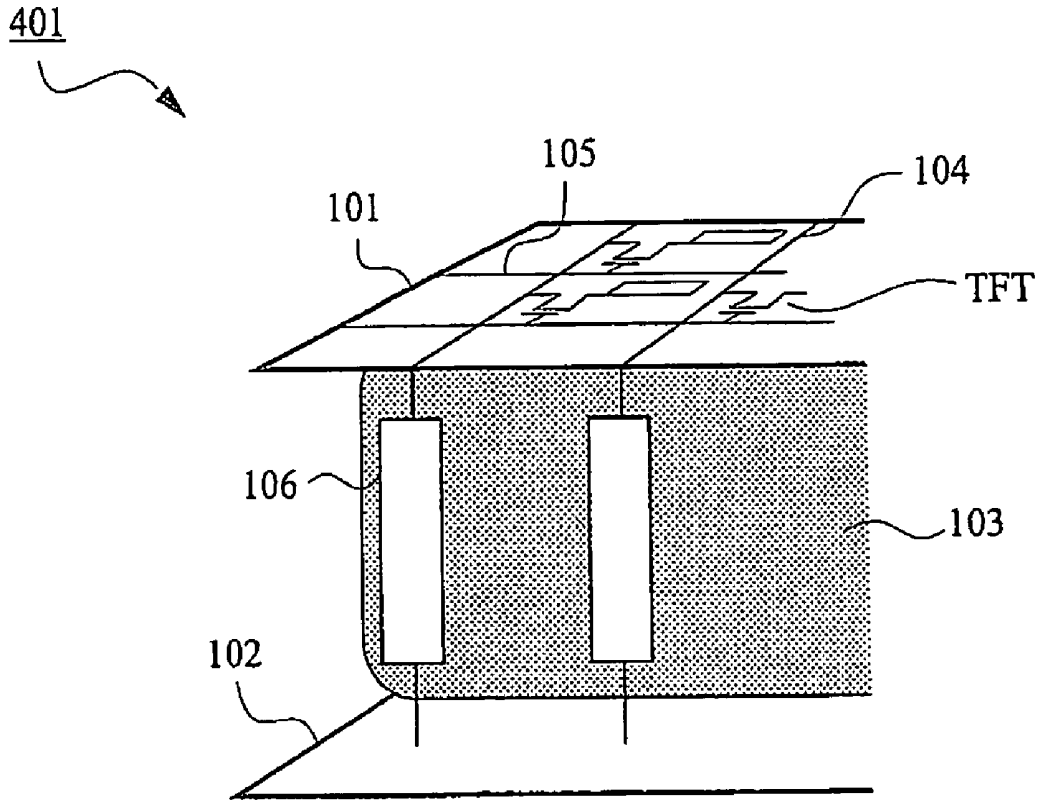

FIG. 2A

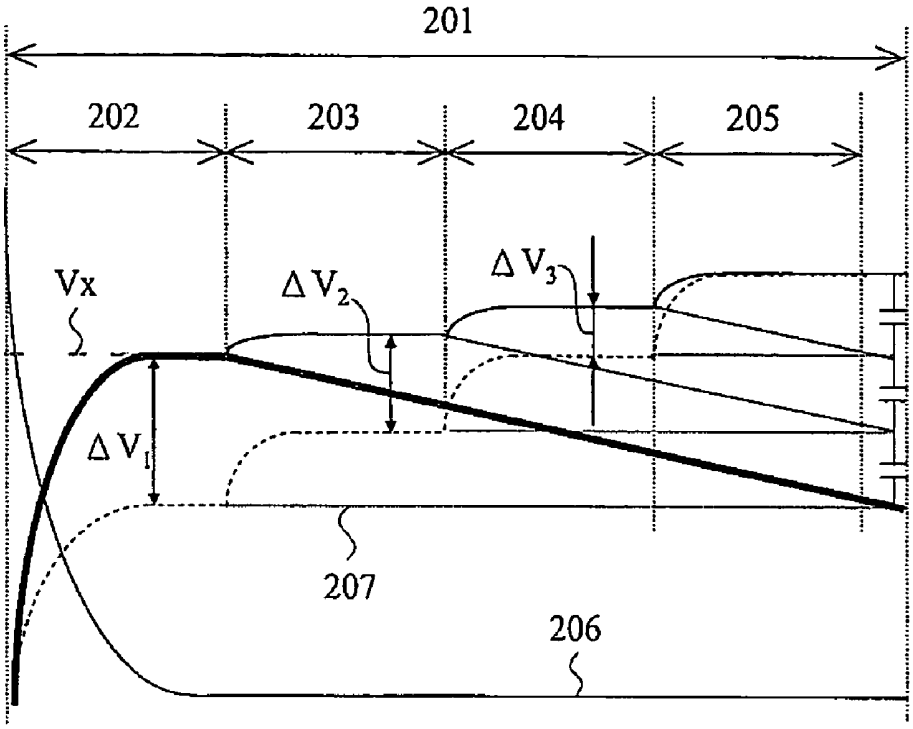
201
202
203
204
205
Vx
ΔV2
ΔV3
ΔV1
207
206

FIG. 2B

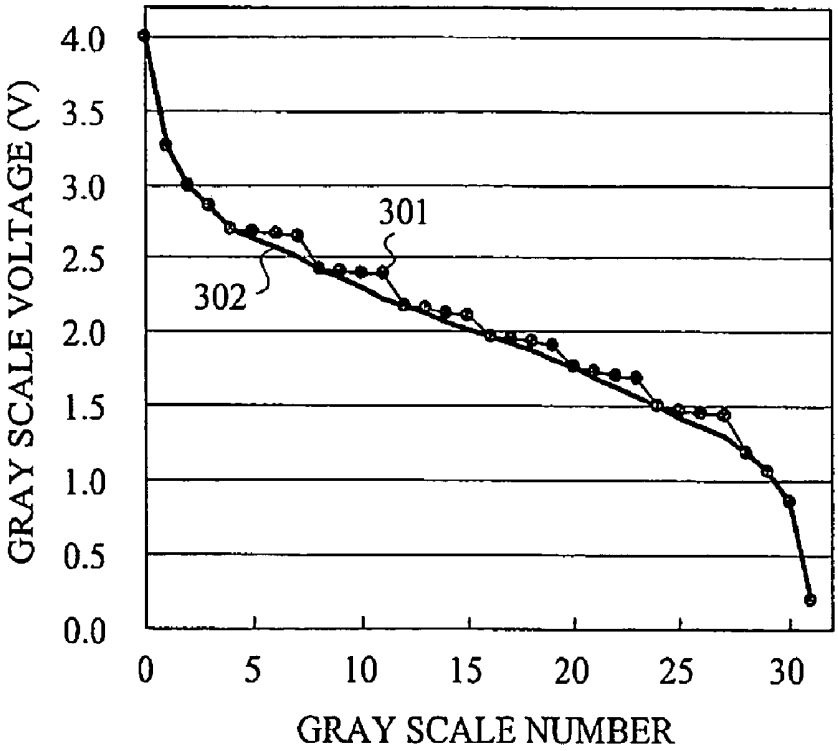
GRAY SCALE VOLTAGE (V)
4.0
3.5
3.0
2.5
2.0
1.5
1.0
0.5
0.0
301
302
0
5
10
15
20
25
30
GRAY SCALE NUMBER

FIG. 3

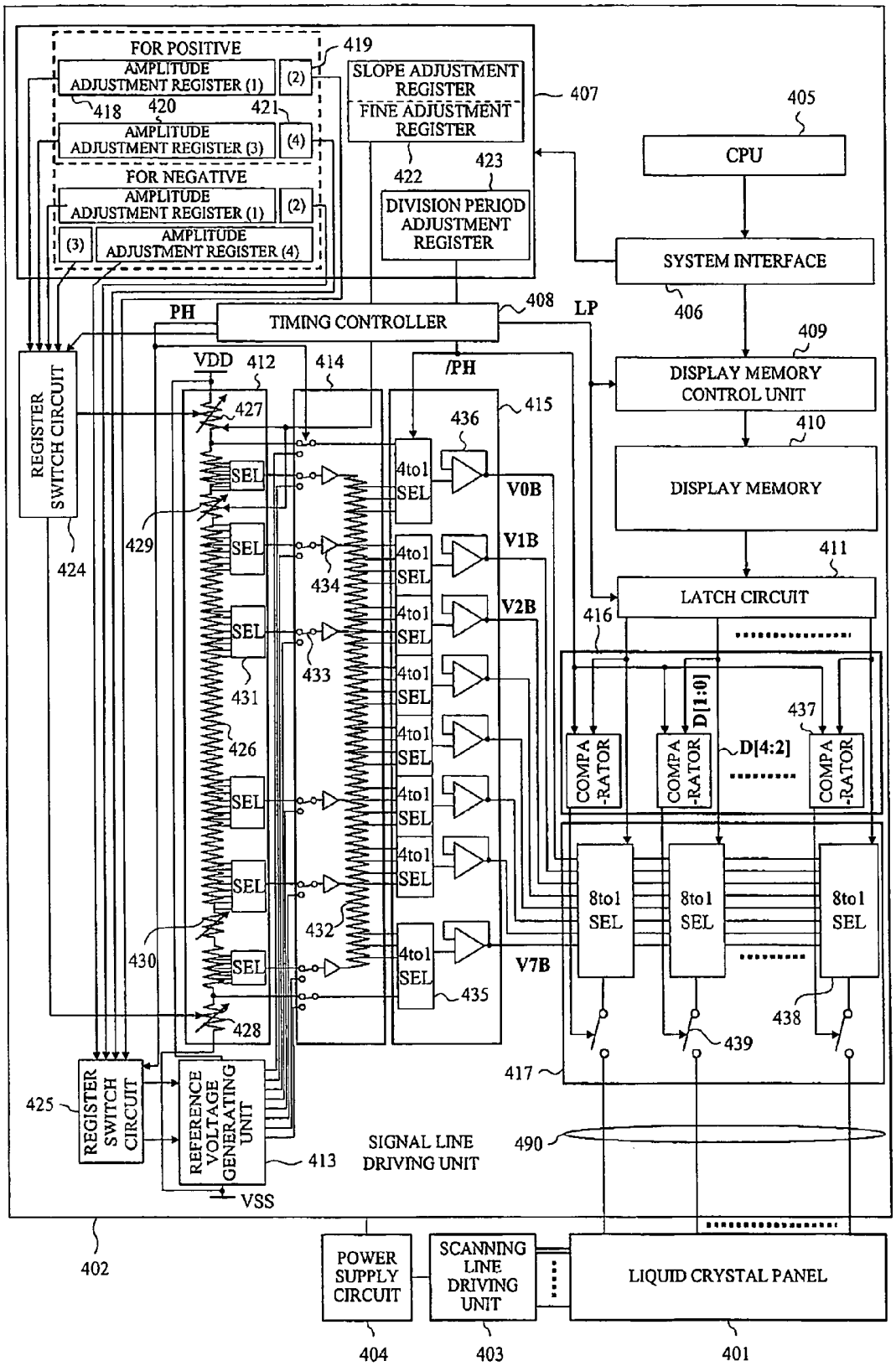
FOR POSITIVE
AMPLITUDE ADJUSTMENT REGISTER (1)
(2)
AMPLITUDE ADJUSTMENT REGISTER (3)
(4)
FOR NEGATIVE
AMPLITUDE ADJUSTMENT REGISTER (1)
(2)
(3)
AMPLITUDE ADJUSTMENT REGISTER (4)
SLOPE ADJUSTMENT REGISTER
FINE ADJUSTMENT REGISTER
DIVISION PERIOD ADJUSTMENT REGISTER
CPU
SYSTEM INTERFACE
TIMING CONTROLLER
PH
/PH
LP
VDD
VSS
REGISTER SWITCH CIRCUIT
DISPLAY MEMORY CONTROL UNIT
DISPLAY MEMORY
LATCH CIRCUIT
COMPA-RATOR
D[1:0]
D[4:2]
8to1 SEL
4to1 SEL
SEL
V0B
V1B
V2B
V7B
REFERENCE VOLTAGE GENERATING UNIT
SIGNAL LINE DRIVING UNIT
POWER SUPPLY CIRCUIT
SCANNING LINE DRIVING UNIT
LIQUID CRYSTAL PANEL
402
404
403
401

FIG. 4A

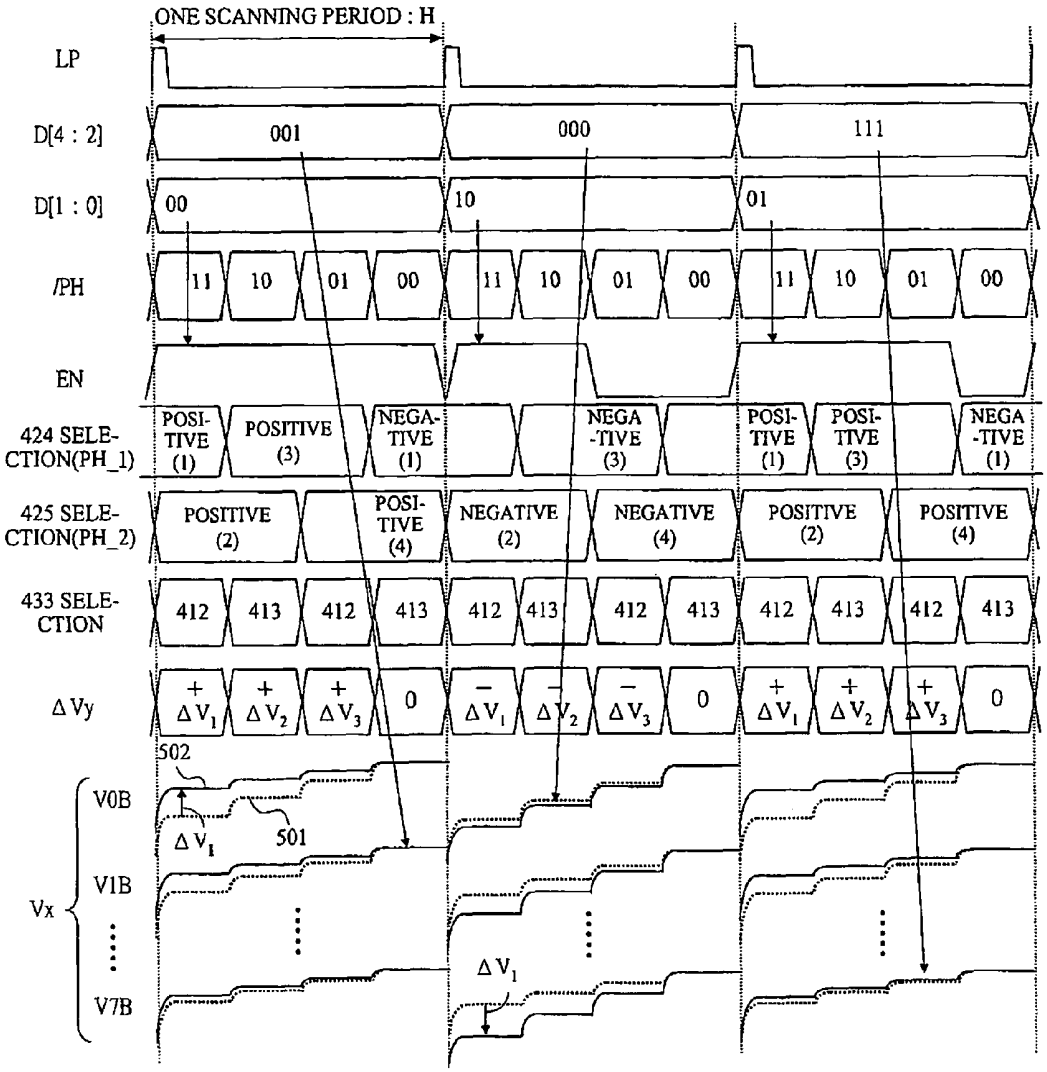

FIG. 4B

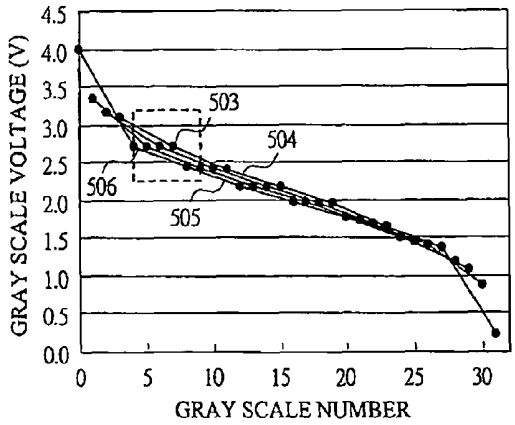

FIG. 4C

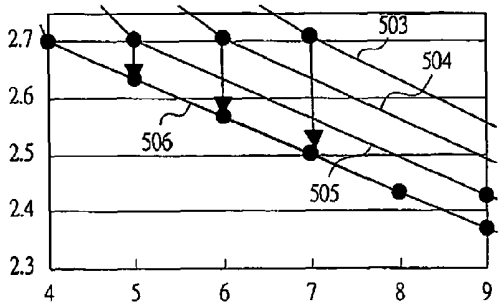

FIG. 5A

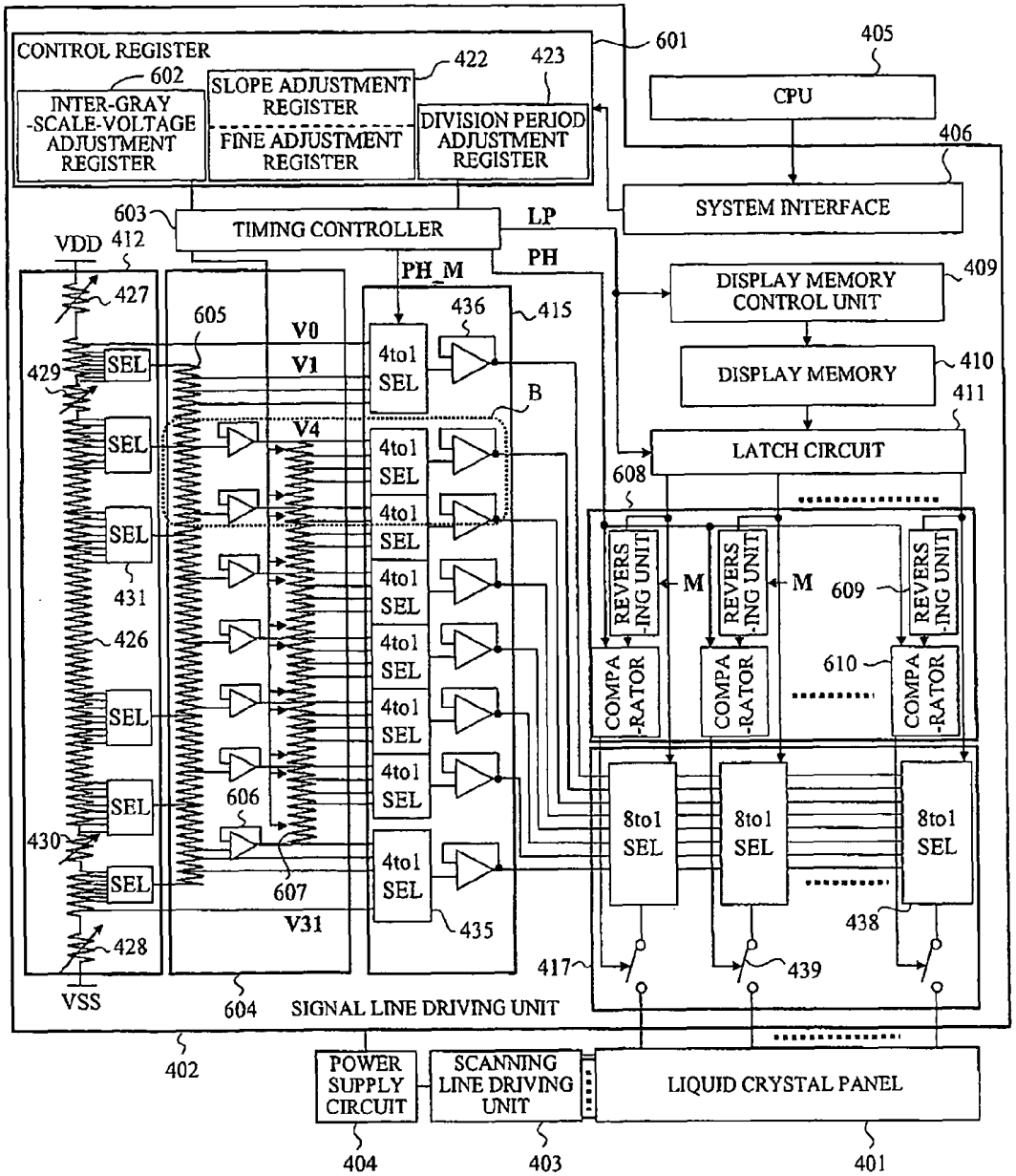

FIG. 5B

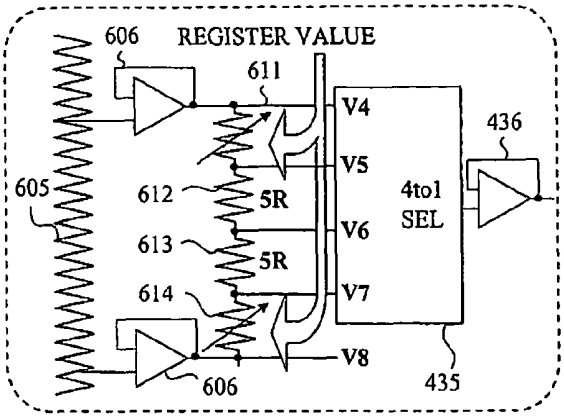

FIG. 5C

Reg	611	Reg	614
00	5R	00	5R
01	10R	01	10R
10	25R	10	25R
11	50R	11	50R

FIG. 6A

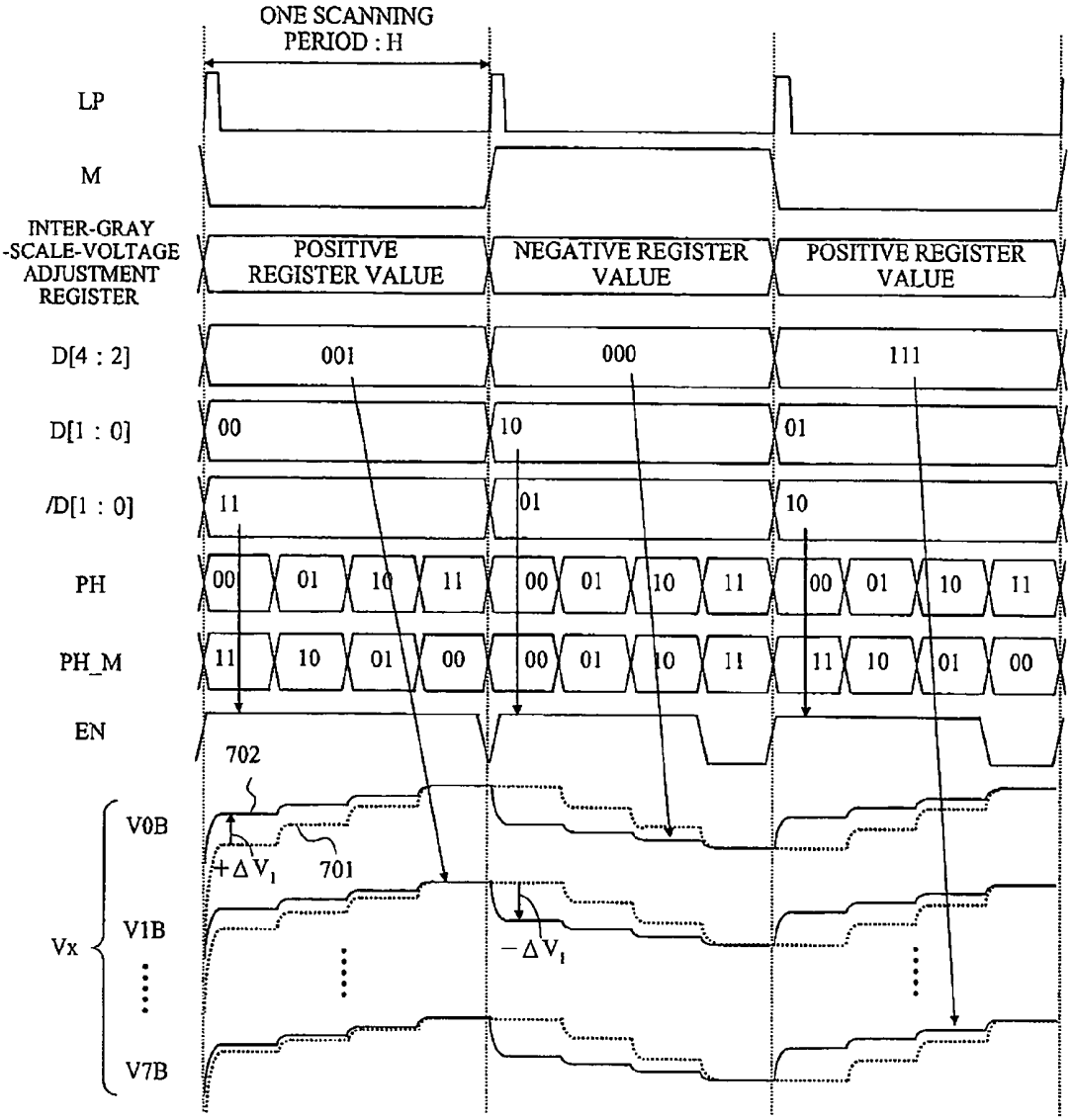

FIG. 6B

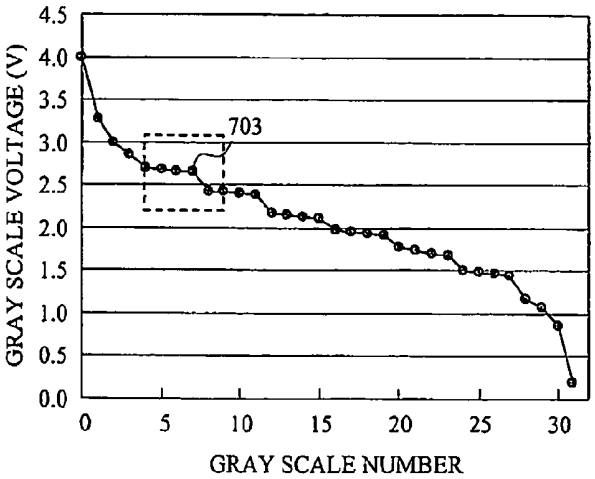

FIG. 6C

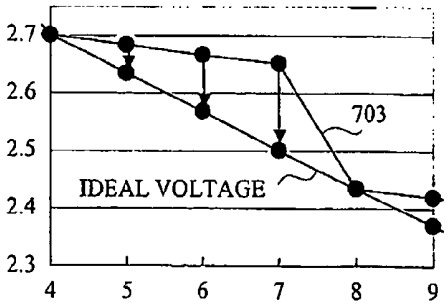

FIG. 7A

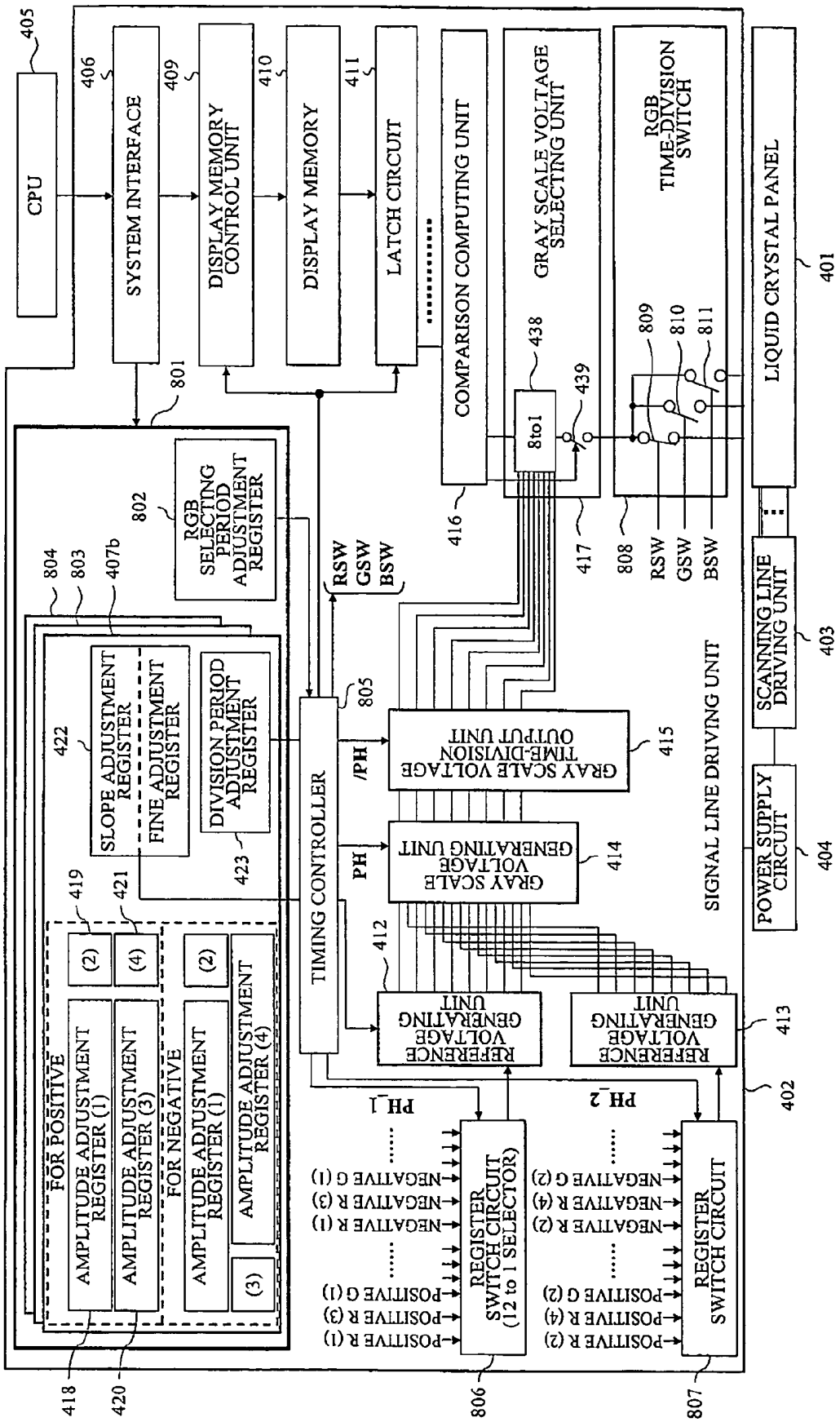
CPU
405
SYSTEM INTERFACE
406
DISPLAY MEMORY CONTROL UNIT
409
DISPLAY MEMORY
410
LATCH CIRCUIT
411
COMPARISON COMPUTING UNIT
416
GRAY SCALE VOLTAGE SELECTING UNIT
417
RGB TIME-DIVISION SWITCH
808
LIQUID CRYSTAL PANEL
401
801
RGB SELECTING PERIOD ADJUSTMENT REGISTER
802
804
803
407b
SLOPE ADJUSTMENT REGISTER
FINE ADJUSTMENT REGISTER
422
DIVISION PERIOD ADJUSTMENT REGISTER
423
419
421
FOR POSITIVE
AMPLITUDE ADJUSTMENT REGISTER (1)
AMPLITUDE ADJUSTMENT REGISTER (3)
FOR NEGATIVE
AMPLITUDE ADJUSTMENT REGISTER (1)
AMPLITUDE ADJUSTMENT REGISTER (4)
(2)
(4)
(3)
418
420
TIMING CONTROLLER
805
RSW
GSW
BSW
/PH
PH
GRAY SCALE VOLTAGE TIME-DIVISION OUTPUT UNIT
415
GRAY SCALE VOLTAGE GENERATING UNIT
414
REFERENCE VOLTAGE GENERATING UNIT
412
REFERENCE VOLTAGE GENERATING UNIT
413
SIGNAL LINE DRIVING UNIT
402
SCANNING LINE DRIVING UNIT
403
POWER SUPPLY CIRCUIT
404
PH_1
PH_2
REGISTER SWITCH CIRCUIT (12 to 1 SELECTOR)
806
REGISTER SWITCH CIRCUIT
807
POSITIVE R (1)
POSITIVE R (3)
POSITIVE G (1)
NEGATIVE R (1)
NEGATIVE R (3)
NEGATIVE G (1)
POSITIVE R (2)
POSITIVE R (4)
POSITIVE G (2)
NEGATIVE R (2)
NEGATIVE R (4)
NEGATIVE G (2)
8to1
438
439
809
810
811
RSW
GSW
BSW

FIG. 7B

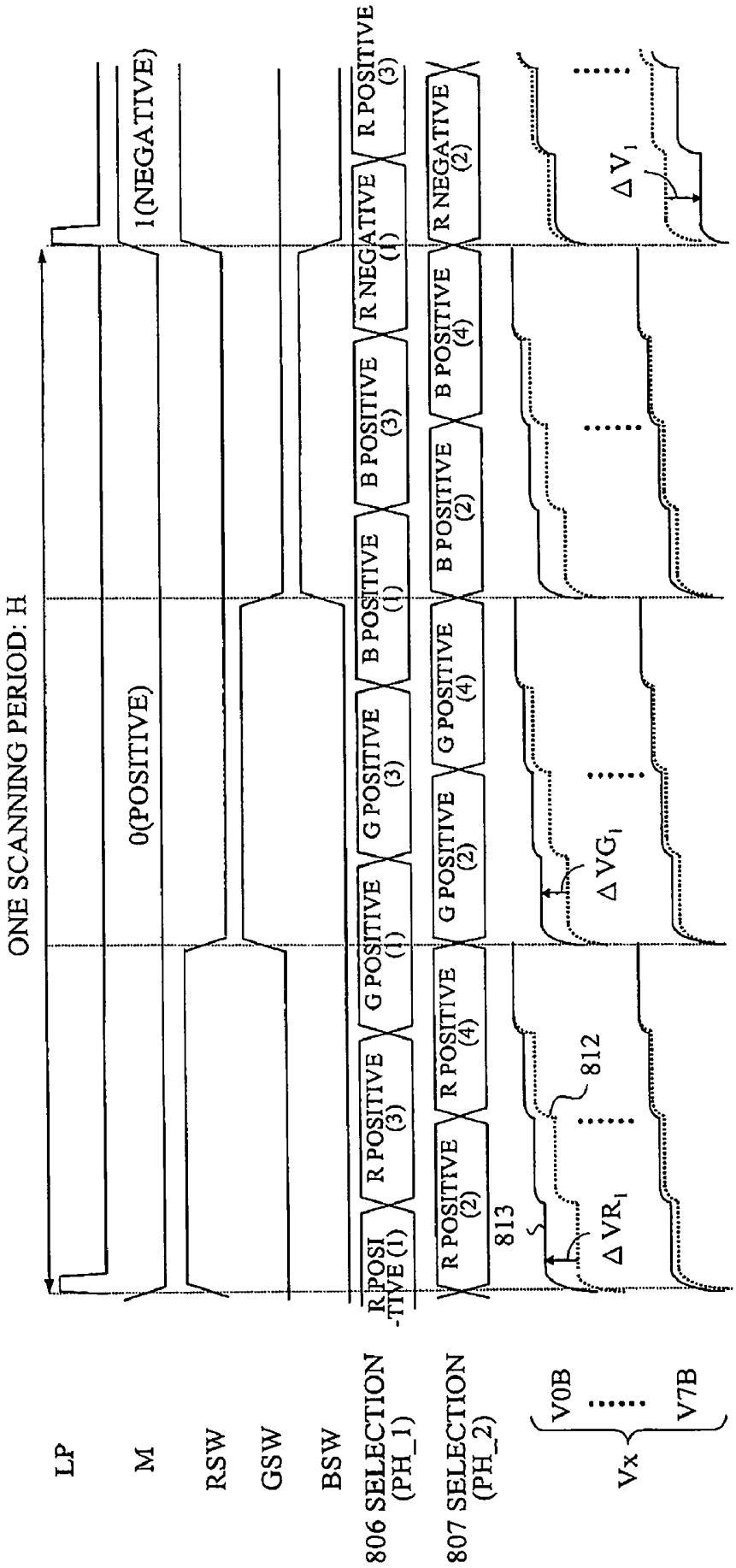
ONE SCANNING PERIOD: H
LP
M
RSW
GSW
BSW
806 SELECTION (PH_1)
807 SELECTION (PH_2)
Vx
V0B
V7B
0(POSITIVE)
1(NEGATIVE)
R POSI -TIVE (1)
R POSITIVE (2)
R POSITIVE (3)
R POSITIVE (4)
G POSITIVE (1)
G POSITIVE (2)
G POSITIVE (3)
G POSITIVE (4)
B POSITIVE (1)
B POSITIVE (2)
B POSITIVE (3)
B POSITIVE (4)
R NEGATIVE (1)
R NEGATIVE (2)
R POSITIVE (3)
813
812
ΔVR1
ΔVG1
ΔV1

FIG. 8A

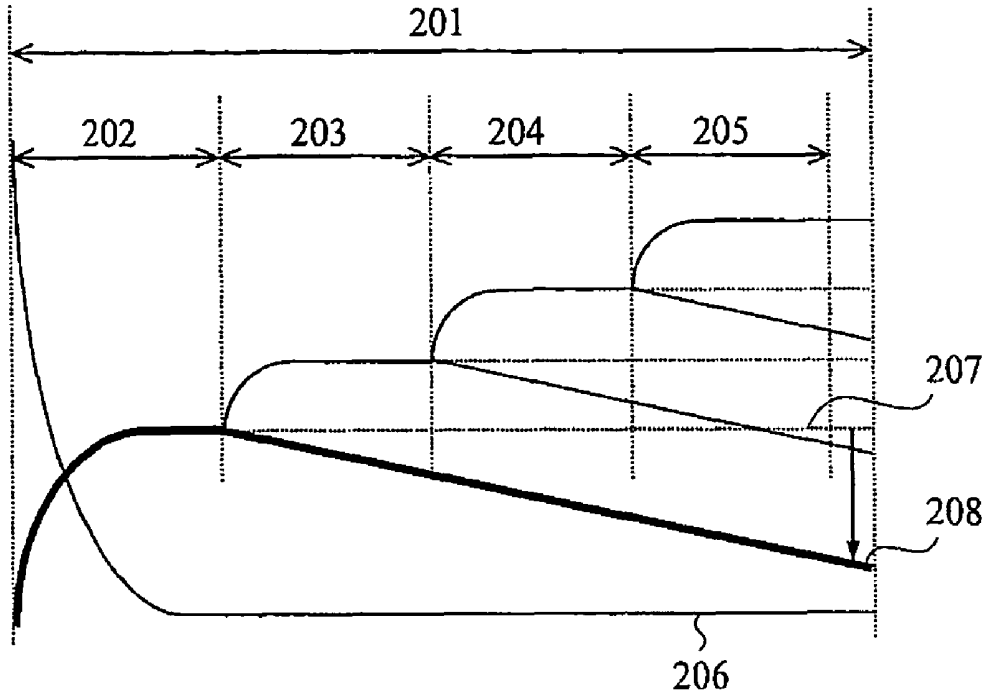
201
202
203
204
205
207
208
206

FIG. 8B

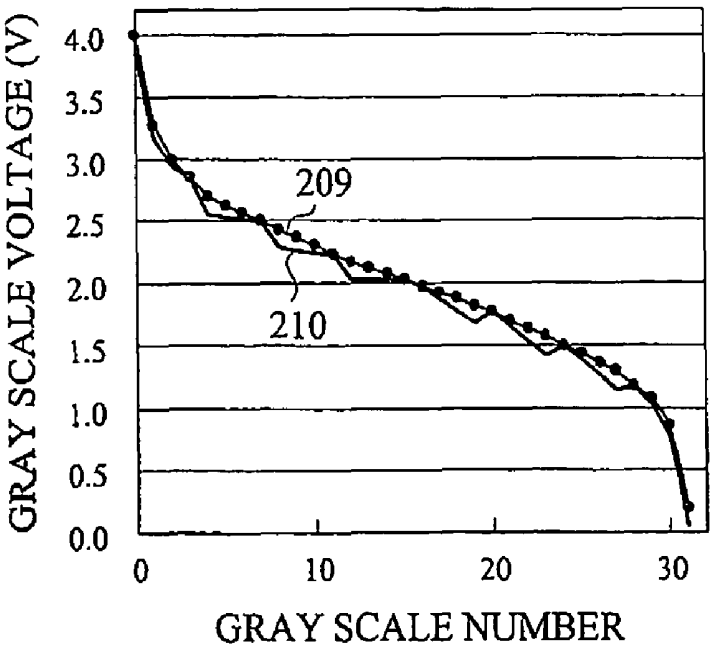
GRAY SCALE VOLTAGE (V)
4.0
3.5
3.0
2.5
2.0
1.5
1.0
0.5
0.0
209
210
0
10
20
30
GRAY SCALE NUMBER

DISPLAY DRIVER

CLAIM OF PRIORITY

The present application claims priority from Japanese Patent Application No. JP 2005-261924 filed on Sep. 9, 2005, the content of which is hereby incorporated by reference into this application.

TECHNICAL FIELD OF THE INVENTION

The present invention relates to the technology for a display driver (such as IC mounted with a driving circuit) to be provided in a mobile device such as a cellular phone. More particularly, it relates to the technology for a driving method and a driving circuit of a display device operable with small power consumption and small-scale circuit.

BACKGROUND OF THE INVENTION

Conventionally, as a technology for a driving circuit for a display device such as TFT liquid crystal display, the technology for a driving circuit disclosed in U.S. Patent Publication No. 2005-052477 (JP-A No. 2005-99665) has been known. This driving circuit has gray scale voltage lines in accordance with the number of gray scales of high-order bits of display data, a selector which receives a pulse signal at each time determined in advance so as to correspond to low-order bits of the display data and selects a gray scale voltage line in accordance with the contents of the high-order bits to output the voltage to a signal line only during the period when the pulse signal is kept active, and a gray scale voltage generating unit for supplying a gray scale voltage, which is changed by the number of gray scales of low-order bits of image data, to each gray scale voltage line. In the driving method disclosed in U.S. Patent Publication No. 2005-052477, one gray scale voltage is selected from a gray scale voltage group whose voltage levels are changed every predetermined divided period in accordance with a high-order bit of display data, and the selected gray scale voltage is outputted to a signal line only during the period in accordance with the information of a low-order bit of the display data. This method is hereinafter referred to as a first driving method. According to the configuration and operation described above, it is possible to realize more gray scale displays in smaller circuit scale.

Moreover, as a conventional method for realizing the γ adjusting function, the driving circuit disclosed in JP-A No. 2005-49868 has been known. In the circuit and method thereof, amplitude adjustment, slope adjustment, and fine adjustment for an S-shaped γ-characteristic curve can be made by an amplitude adjustment register, slope adjustment register, and fine adjustment register so that each gray scale voltage corresponding to a desired γ-characteristic in the characteristics of each liquid crystal panel can be adjusted.

SUMMARY OF THE INVENTION

In the case of the above first driving method, when a gray scale display is performed on a liquid crystal panel having a certain structure and its display device, display luminance does not uniformly change and a streak-like image quality deterioration occurs in some cases. For example, when there is a current leakage path between a signal line and an opposite electrode in a liquid crystal panel, electric charges charged in the signal line and a selected pixel electrode move to the opposite electrode and the gray scale voltage level applied to

the signal line and pixel electrode is fluctuated in come cases. Accordingly, image quality deterioration occurs and a desired display luminance cannot be obtained.

FIG. **1** shows an example of a liquid crystal panel **401** according to a known technology, to which a technology of the present invention is to be applied. The liquid crystal panel **401** has a TFT substrate **101**, an opposite electrode **102**, a liquid-crystal layer **103**, signal lines (also referred to as data line) **104**, scanning lines **105**, and current leakage paths **106**. It is known that image quality deterioration occurs in the liquid crystal panel **401** particularly having the current leakage path **106** between the signal line **104** and the opposite electrode **102**.

In this case, a cause of the image quality deterioration will be described below with reference to FIG. **8**A and FIG. **8**B. FIG. **8**A shows voltage transitions of the signal line (**104**) and opposite electrode (**102**) in one scanning period. A reference numeral **201** denotes one scanning period, **202** denotes a first divided period, **203** denotes a second divided period, **204** denotes a third divided period, and **205** denotes a fourth divided period. Moreover, a reference numeral **206** denotes an opposite electrode voltage, **207** denotes the ideal voltage of the gray scale in which a voltage application period is the first divided period **202**, and **208** denotes the voltage transition of the signal line (**104**) when the first driving method is applied to the liquid crystal panel **401** shown in FIG. **1**.

First, in the case of the first driving method, when focusing attention on the gray scale in which a voltage application period is the first divided period **202**, after the first division period ends, the signal line **104** is turned to a floating state in the time of "one scanning period **201**-first divided period **202**" (rest of the one scanning period **201**). Then, when the current leakage path **106** is present between the signal line **104** and the opposite electrode **102**, the gray scale voltage of the signal line **104** fluctuates to the side of the opposite electrode **206** and the signal line voltage transition **208** actually occurs relative to the ideal voltage **207**. On the other hand, when focusing attention on the gray scale in which a voltage application period is the fourth divided period **205**, a TFT is turned to an off-state immediately after the fourth divided period **205** is completed. Therefore, the gray scale voltage of the signal line **104** is hardly fluctuated.

As described above, voltage fluctuation different in each divided period (**202** to **205**) occurs in the signal line **104**. For example, when assuming display data as 32 levels and the number of divisions of one scanning period **201** as 4, the deviation of this voltage fluctuation value is repeated eight times for each four gray scales.

FIG. **8**B shows the gray scale number-gray scale voltage characteristics based on the output voltage of the signal line driving unit connected to the signal line **104** and the voltage of the signal line (**104**) immediately after a TFT is turned to an off-state. A reference numeral **209** denotes the characteristics between a gray scale number of the output voltage of a signal-line driving unit and a gray scale voltage, and **210** denotes the characteristics between a gray scale number of a pixel electrode voltage (signal line voltage) immediately after a TFT is turned to an off-state and a gray scale voltage. The display luminance of the liquid crystal panel **401** is determined by a pixel electrode voltage (**210**). Therefore, when gray scale display is performed, image quality deterioration in which 8 streaks are observed occurs. Note that a mechanism in which image quality deterioration occurs has been described here based on the case where the voltage of the signal line **104** is changed from a low level to a high level as shown in FIG. **8**A. However, in the case of the first driving method, image quality

deterioration occurs similarly also when the voltage of the signal line **104** is changed from a high level to a low level.

An object of the present invention is to provide the technology capable of solving the problem of the image quality deterioration as described above and achieving the multi-gray scale display and reduction of image quality deterioration with a small-scale circuit.

The cause of the above-described image quality deterioration lies in the fact that the voltage fluctuation value of the signal line **104** changes in each of the divided periods (**202**-**205**). Therefore, in the technology of the present invention, a function and means for adjusting the γ-characteristic in each divided period (**202** to **205**) is used. The γ-characteristic corresponds to a relation of display data, gray scale voltage, and actual display luminance (pixel electrode voltage). As a conventional method for achieving the γ adjusting function, the driving circuit disclosed in JP-A No. 2005-49868 is known.

In such a circumstance, in order to achieve the object described above, the technology of the present invention has the configuration in which the γ adjusting function disclosed in JP-A No. 2005-49868 (hereinafter, referred to as second driving method) is applied to the first driving method. More specifically, in this configuration, for the voltage fluctuations in the signal line (**104**) and a pixel electrode generated when applying the first driving method to a display panel such as the liquid crystal panel (**401**) having the current leakage path (**106**) between the signal line (**104**) and the opposite electrode (**102**), means for applying and outputting a gray scale voltage, to which level adjustment such as addition or subtraction is applied in consideration of the voltage fluctuation value, that is, so as to cancel the influence of the voltage fluctuations, to the signal line (**104**) is provided.

FIG. **2**A shows a transition of voltage levels of the signal line (**104**) in the driving method and the configuration of the driving circuit in which the second driving method is applied to the first driving method in the technology of the present invention. A gray scale voltage Vx ($Vx=Vdata+\Delta Vy$, x=0, 1, 2, . . . , 31) obtained by previously adding voltage fluctuation values $\Delta V1$, $\Delta V2$, and $\Delta V3$ different in each divided periods (**202**-**205**) is generated for the ideal voltage **207**, and a signal-line driving unit applies the voltage (Vx) to the signal line **104** of the liquid crystal panel **401**. As a result, it is possible to adjust a voltage difference between adjacent gray scales immediately after a TFT is turned to an off-state.

FIG. **2**B shows gray scale number-gray scale voltage characteristics based on the voltage of the signal line (**104**). A reference numeral **301** denotes a characteristic between gray scale number of an output voltage of a signal line driving unit and the voltage, **302** denotes a characteristic between gray scale number of a pixel electrode voltage (signal line voltage) and the voltage at the timing when a TFT is turned to an off-state. As shown by the pixel electrode voltage (**302**) for actually determining a display luminance, the characteristic curve becomes smooth, and a streak-like image quality deterioration generated in the conventional technology can be avoided.

As described above, by using a driver of the present invention, it is possible to achieve the multi-gray scale display in a small-scale circuit and reduction of image quality deterioration which is the first object of the present invention at the same time.

The driver of the present invention has a gray scale voltage generating unit for generating gray scale voltages corresponding to each of a plurality of gray scales and a gray scale voltage selecting unit for selecting a gray scale voltage to be output to the signal line of a display panel in accordance with inputted display data. The gray scale voltage selecting unit selects a gray scale voltage to be outputted to each of the signal lines from gray scale voltages outputted from the gray scale voltage generating unit in a time division manner to control the length of a period for outputting a selected gray scale voltage in accordance with the display data. The gray scale voltage generating unit can generate the gray scale voltage whose level to an ideal voltage fluctuates in each of a plurality of periods obtained by time division of one scanning period for outputting the gray scale voltage to the signal line. Moreover, the driver of the present invention has means for generating the gray scale voltage whose level differs in each of the time-divided periods obtained by adding or subtracting a voltage fluctuation value in accordance with the voltage fluctuation value in each time-divided period on the signal line. Alternatively, the driver of the present invention has means for applying level adjustment such as addition or subtraction or performing conversion to the gray scale voltage generated by the gray scale voltage generating unit and then outputting the voltage. Particularly, the gray scale voltage generating unit outputs a gray scale voltage in which the level gradually (stepwise) fluctuates. Moreover, the driver of the present invention has a register for level adjustment for each of the time-divided periods.

The driver of the present invention has an output circuit (corresponding to **412** and **413** in the embodiment) for outputting a voltage which changes stepwise in the dime-divided periods in one horizontal period, selecting circuits (**414** to **417**) for determining the level of the voltage which changes stepwise based on the display data, and circuits (**427** and **428**) for shifting the level of the voltage which changes stepwise for each of the time-divided periods. Moreover, the driver of the present invention has an output circuit for outputting a voltage which changes stepwise in the dime-divided periods in one horizontal period, selecting circuits for determining the level of the voltage which changes stepwise based on the display data, and setting circuits (amplitude adjustment registers **418** to **421**) for setting the level of the voltage which changes stepwise for each of the divided periods.

According to the present invention, it is possible to realize a driving circuit capable of achieving multi-gray scale display with a small scale circuit and reducing the image quality deterioration.

BRIEF DESCRIPTIONS OF THE DRAWINGS

FIG. **1** is an explanatory diagram showing a configuration example of a liquid crystal panel which is a known technology to which a driver of an embodiment of the present invention is to be applied and a factor of the voltage level fluctuation (current leakage path) of the signal line of the liquid crystal panel;

FIG. **2**A is a diagram showing a change of signal line voltage level illustrating the effect obtained by the gray scale voltage adjusting function of the driving method and the driver according to an embodiment in which a second driving method is applied to a first driving method;

FIG. **2**B is a diagram showing a gray scale number-gray scale voltage characteristic;

FIG. **3** is a diagram showing a configuration of a system (liquid crystal display) including the driver (TFT liquid crystal driving circuit) of the first embodiment of the present invention, particularly a block diagram of a signal line driving unit;

FIG. **4**A is a timing chart of each signal in the driving method of the first embodiment of the present invention;

FIG. **4**B is a diagram showing a gray scale number-gray scale voltage characteristic illustrating the effect of the driving method;

FIG. **4**C is an enlarged view of a part of FIG. **4**B;

FIG. **5**A is a diagram showing a configuration of a system (liquid crystal display) including the driver (TFT liquid crystal driving circuit) of the second embodiment of the present invention, particularly a block diagram of a signal line driving unit;

FIG. **5**B is an enlarge view showing the configuration of a part of the system;

FIG. **5**C is a table showing a setting example of the register in FIG. **5**B;

FIG. **6**A is a timing chart of each signal in the driving method of the second embodiment of the present invention;

FIG. **6**B is a diagram showing a gray scale number-gray scale voltage characteristic illustrating the effect of the driving method;

FIG. and FIG. **6**C is an enlarged view of a part in FIG. **6**B;

FIG. **7**A is a diagram showing a configuration of a system (liquid crystal display) including the driver (TFT liquid crystal driving circuit) of the third embodiment of the present invention;

FIG. **7**B is a timing chart of each signal in the driving method of the third embodiment;

FIG. **8**A is a diagram showing a signal line voltage when the first driving method is applied to the liquid crystal panel shown in FIG. **1** and a voltage level is changed from a low voltage to a high voltage; and

FIG. **8**B is a diagram showing a gray scale number-gray scale voltage characteristic when a voltage level is changed from a low voltage to a high voltage.

DESCRIPTIONS OF THE PREFERRED EMBODIMENTS

Hereinafter, embodiments of the present invention will be described in detail with reference to the accompanying drawings. Note that components having the same function are denoted by the same reference symbols throughout the drawings for describing the embodiment, and the repetitive description thereof will be omitted. FIG. **1** to FIG. **7** are drawings for describing the embodiment. FIG. **8**A and FIG. **8**B are drawing for describing prior arts. Note that, when there are a plurality of components having the same function in each drawing, a symbol or numeral is provided only for some of them.

The driver of this embodiment is provided with a gray scale voltage adjusting function capable of adjusting a gray scale voltage output in consideration of the voltage fluctuation in a signal line of a display device. The function is used to drive a display device according to the driving method of this embodiment. The driving method of this embodiment is obtained by combining the second driving method with the first driving method.

Hereinafter, the prior art is briefly described for comparison with this embodiment. In the case where an active matrix display panel, for example, a TFT liquid crystal panel is driven in accordance with the first driving method as a prior art, when the selecting period of the signal line **104** ends, supply of electric charges from the driving circuit is stopped, electric charges of the signal line **104** are retained by the capacitance between wirings in the liquid crystal panel **401**, for example, the capacitance coupling between the signal line **104** and the scanning line **105**, and the signal line **104** is turned to a floating state. Moreover, the gray scale voltage of a pixel electrode in a selected state retains the same voltage as that of the signal line **104** until a TFT is turned to an off-state.

However, when the driving circuit to be driven by the first driving method is connected to the TFT liquid crystal panel **401** having the current leakage path **106** between the signal line **104** and the opposite electrode **102** as shown in FIG. **1**, electric charges constantly charged to the signal line **104** continuously move to the opposite electrode **102**. Therefore, a signal line voltage Vdata starts to fluctuate from the moment when the signal line **104** becomes a floating state. Consequently, a desired effective value cannot be obtained and streak-like image quality deterioration occurs when the gray scale display is performed.

Incidentally, as shown by the following expression 1, the above-described voltage fluctuation value ΔVy (y=1, 2, 3, or 4) is determined depending on the potential difference between the signal line voltage Vdata and the opposite electrode voltage Vcom, capacitive load CLCD in the liquid crystal panel **401**, impedance Rleak of the current leakage path **106**, and a period of the floating state of the signal line **104** (one scanning period **201**-signal line selecting period).

$$\Delta Vy=-(V\text{data}-V\text{com})\times e\hat{}\{-(4-y)\times t\div\tau\} \qquad \text{Expression 1}$$

First, when focusing attention on the liquid crystal panel **401**, the voltage fluctuation value ΔVy increases as the capacitive load CLCD in the panel decreases. Moreover, the voltage fluctuation value ΔVy increases as the impedance Rleak of the current leakage path **106** decreases. Therefore, it is found that the degree of image quality deterioration differs in each liquid crystal panel **401** to be driven.

Then, when focusing attention on the period in which the signal line **104** becomes a floating state, based on time t (t=H/4) obtained by dividing one scanning period H into four equal periods, the floating period of the first gray scale group in which the signal line **104** is selected only in the first period is 3t, the floating period of the second gray scale group in which the signal line **104** is selected up to the third period is 2t, the floating period of the third gray scale group in which the signal line **104** is selected up to the third period is t, and the floating period of the fourth gray scale group in which the signal line **104** is selected up to the fourth period is 0. Then, the voltage fluctuation value ΔV**1** of the first gray scale group is largest, ΔV**2** and ΔV**3** gradually decrease in order, and the voltage fluctuation value ΔV**4** of the fourth gray scale group is 0.

In the case of this embodiment, in consideration of the fact that the portion of e^{−(4−y)×t÷τ} in expression 1 becomes constant when the y-th gray scale group is the same in the same liquid crystal panel **401**, the gray scale voltage Vx (Vx=Vdata+ΔVy) to which the voltage fluctuation value ΔVy is added is generated for each gray scale group and applied to the signal line **104**.

Hereinafter, a driving method and a driver of this embodiment and a system including the driver will be described.

First Embodiment

A configuration and operations of the first embodiment will be described below with reference to FIG. **3** and FIG. **4**. FIG. **3** shows a configuration of a system (liquid crystal display) including the driver of the first embodiment. FIG. **4**A is a timing chart of each signal showing the control of a register and a switch in the driving method of the first embodiment. FIG. **4**B and FIG. **4**C show the gray scale number-gray scale voltage characteristics in the driving method.

First, as shown in FIG. **3**, the liquid crystal display has a configuration including a signal line driving unit **402**, a scan-

ning line driving portion **403**, a power supply circuit **404**, and a CPU **405** for the liquid crystal panel **401**. The signal line driving unit **402** is a driving circuit for driving the liquid crystal panel **401** in accordance with the driving method of this embodiment.

The liquid crystal panel **401** has a structure in which liquid crystal is sealed between two glass substrates. As shown in FIG. **1**, TFTs are disposed for each pixel on one glass substrate and the opposite electrodes **102** are disposed on the other glass substrate. Moreover, the liquid crystal panel **401** is a TFT liquid crystal panel referred to as the active matrix type in which the scanning line s**105** and the signal lines **104** to be connected to TFTs are arranged in matrix, the drain terminal of the TFT is connected to the output of the gray scale voltage selecting unit **417** via the signal line **104**, the gate terminal of the TFT is connected to the output of the scanning line driving unit **403** via the scanning line **105**, and the source terminal of the TFT is connected to a pixel electrode. Furthermore, this embodiment is particularly directed to the liquid crystal panel **401** having the current leakage path **106** between the signal line **104** and the opposite electrode **102**.

Note that, although the description is progressed based on the liquid crystal panel **401**, the present invention can be applied to another device capable of controlling a display luminance at a voltage level and having a signal line corresponding to the above-described current leakage path **106**, for example, an organic EL device.

A signal line **490** connected to the gray scale voltage selecting unit **417** is an extended portion of the signal line **104** in the liquid crystal panel **401** in FIG. **1**. Signal line voltage fluctuation occurs in the signal line **490** extending to the panel side from the gray scale voltage selecting unit **417** and the signal line **104** in the panel.

The signal line driving unit **402** is a block which controls the display luminance of the liquid crystal panel **401** by converting digital display data into analog gray scale voltage Vdata and applying the gray scale voltage Vdata to a pixel electrode via the signal line **104** of the liquid crystal panel **401**.

The scanning line driving unit **403** is a block for line-sequentially applying a selection signal synchronizing with a line clock LP generated by the timing controller **408** in the signal line driving unit **402** described later to the scanning line **105** of the liquid crystal panel **401**.

The power supply circuit **404** is a block for generating a power supply voltage level necessary in the signal line driving unit **402** and the scanning line driving unit **403** from a power supply voltage Vci supplied from outside. Note that the generation of the power supply voltage level is achieved by multiplying a power supply voltage Vci by a charge pump circuit or the like by n.

Next, blocks constituting the signal line driving unit **402** will be described below. The signal line driving unit **402** has a system interface **406**, a display memory control unit **409**, a display memory **410**, a latch circuit **411**, a control register **407**, a timing controller **408**, a first reference voltage generating unit **412**, a second reference voltage generating unit **413**, a gray scale voltage generating unit **414**, a gray scale voltage time-division output unit **415**, a comparison computing unit **416**, a gray scale voltage selecting unit **417**, and register switching circuits **424** and **425**.

The control register **407** includes amplitude adjustment registers (**418** to **421**), slope adjustment register and fine adjustment register **422**, and a divided period adjustment register (divided period PH setting register) **423**. The amplitude adjustment register has amplitude adjustment registers (for positive electrode and negative electrode) such as an amplitude adjustment register for first gray scale group (first period amplitude adjustment register) **418**, an amplitude adjustment register for second gray scale group (second period amplitude adjustment register) **419**, an amplitude adjustment register for third gray scale group (third period amplitude adjustment register) **420**, and an amplitude adjustment register for fourth gray scale group (fourth period amplitude adjustment register) **421**. The slope adjustment register and fine adjustment register **422** are the same as those described in JP-A No. 2005-49868.

The first reference voltage generating unit **412** has a resistor **426**, variable resistors **427**, **428**, **429**, and **430**, and selector circuits **431**. Reference numerals **427** and **428** denote amplitude adjusting variable resistors, and **429** and **430** denote slope adjusting variable resistors. The gray scale voltage generating unit **414** has a ladder resistor **432**, 2-to-1 switches **433**, and operational amplifiers **434**. The gray scale voltage time-division output unit **415** has 4-to-1 selectors **435** and operational amplifier circuits **436**. The comparison computing unit **416** has comparators **437**. The gray scale voltage selecting unit **417** has 8-to-1 selectors **438** and switch circuits **439** and is connected to the signal line **490**.

The first driving method is realized by the gray scale voltage time-division output unit **415**, the comparison computing unit **416**, and the gray scale voltage selecting unit **417**. However, the slope adjustment register and the fine adjustment register **422** can be omitted.

Operations of the internal blocks of the signal line driving unit **402** are described below.

The system interface **406** receives display data and instructions from the CPU **405** and transfers them to the control register **407**. In this case, the instructions correspond to the information for determining an internal operation of a driving circuit, which include a frame frequency, the number of driving lines, divided period information at the time of gray scale time-division driving, a set value of a register of various adjusting functions regarding the γ-characteristic.

In the control register **407**, a register for the γ adjusting function (second method) is set for each polarity of voltage applied for driving the liquid crystal panel **401**. That is, amplitude adjustment registers for positive electrode (**418** to **421**) and similar amplitude adjustment registers for negative electrodes are provided. Basically, the control register **407** is a block for storing instruction data and transferring the data to each block. For example, instructions regarding the frame frequency, the number of driving lines, and divided period information are transferred to a timing controller **408** described later. Moreover, instructions to be stored in the amplitude adjustment registers (**418** to **421**) are transferred to register switching circuits **424** and **425** described later, and instructions to be stored in the slope adjustment register and fine adjustment register **422** are transferred to the reference voltage generating units (**412** and **413**) described later. Note that the display data is once stored in the control register **407** and is outputted to the display memory control unit **409** described later together with an instruction for designating a display position.

The timing controller **408** has a dot counter and generates a line clock LP based on a dot clock inputted from outside. Moreover, the timing controller **408** generates a PH signal for specifying the divided period of each gray scale group for one scanning period from the divided period information transferred from the divided period adjustment register **423**. The gray scale groups in this case are a first gray scale group including gray scale numbers of 4n, a second gray scale group including gray scale numbers of 4n+1, a third gray scale group including gray scale numbers of 4n+2, and a fourth

gray scale group including gray scale numbers of 4n+3 in 32 gray scale numbers from 0 to 31.

The PH signal is a two-bit signal which is changed in the order of 00, 01, 10, and 11 in one scanning period and used for the register switching circuits **424** and **425** described later. Note that the timing controller **408** outputs /PH which is a reverse signal of the PH signal and /PH is used by the 4-to-1 selector **435** in the gray scale voltage time-division output unit **415**. Moreover, the timing controller **408** has a two-bit counter which counts in each state change in PH[0] (PH signal low-order one bit)=PH[1](PH signal high-order one bit)⇔PH[0]≠PH[1] and a two-bit counter which counts in each state change in PH[1]=0⇔PH[1]=1, and the former outputs a PH_1 signal and the latter outputs a PH_2 signal.

The display memory control unit **409** is a block for performing the read and write operations of the display memory **410**. At the time of the write operation, the control unit **409** outputs a signal for selecting the address of the display memory **410** based on an instruction for display position transferred from the control register **407**, and simultaneously transfers the display data to the display memory **410**. Moreover, at the time of the read operation, the control unit **409** collectively selects the display data for one line based on an instruction for display position transferred from the control register **407**.

The display memory **410** has storage areas corresponding to the number of pixels of the liquid crystal panel **401**, and its operations are controlled by the display memory control unit **409**. Note that the display data read and designated by the display memory control unit **409** is transferred to the latch circuit **411**.

The first and second reference voltage generating units (**412** and **413**) have the same circuit configuration and are constituted of a ladder resistor composed of a fixed resistor group (resistor **426**), variable resistors **427** and **428** for performing amplitude adjustment, and variable resistors **429** and **430** for performing slope adjustment between the reference voltage VDD and the reference voltage VSS set in the power supply circuit **404** and selector circuits **431** for performing the fine adjustment. In this case, resistance values of the variable resistors **427** and **428** can be adjusted in accordance with register values transferred from the register switch circuits **424** and **425**.

In FIG. **3**, amplitude adjustment is performed by disposing the variable resistors **427** and **428** near reference voltages VDD and VSS and adjusting the resistance values thereof. Alternatively, it is also possible to use the configuration in which the variable resistors **427**, **428**, **429**, and **430** are replaced with fixed resistors and the amplitude adjustment is performed by using the selector circuit based on a plurality of voltage levels divided by the resistors.

The gray scale voltage generating unit **414** is composed of the 2-to-1 switches **433** for selecting the reference voltages inputted from the first and second reference voltage generating units (**412** and **413**), operational amplifier circuits **434** for impedance-converting an output thereof, and a ladder resistor **432** for generating 32 gray scale voltage levels based on the output voltage of the operational amplifier circuits **434** when display data is a 5-bit data. Note that the 2-to-1 switch **433** can be switched by low-order one bit PH[0] of a PH signal generated by the timing controller **408**. For example, when PH[0] is "0", an output voltage of the first reference voltage generating unit **412** is selected, and when PH[0] is "1", an output voltage of the second reference voltage generating unit **413** is selected.

The gray scale voltage time-division output unit **415** is constituted of the 4-to-1 selectors **435** for sequentially selecting adjacent gray scale voltages of four levels from the output of the gray scale voltage generating unit **414**, that is, 32 voltage levels when display data is 5 bits and operational amplifier circuits **436** for impedance-converting the output of the 4-to-1 selectors **435**. The switching of the 4-to-1 selector **435** is operated by a /PH signal generated in the timing controller **408**, and gray scale voltages V**0**B to V**7**B whose voltage levels are changed four times from low-voltage side to high voltage side in one scanning period are outputted. Alternatively, the switching of the 4-to-1 selector **435** is operated by a PH signal, and gray scale voltages V**0**B to V**7**B whose voltage levels are changed four times from low voltage side to high voltage side in one scanning period are outputted.

The comparison computing unit **416** compares D[1:0] which is low-order two bit of display data D[4:0] and /PH signal by the comparator **437** to output an EN signal which becomes "1" (high) under the condition of /PH≧D[1:0] and "0" (low) under the condition of /PH<D[1:0].

When the switching of the 4-to-1 selector **435** is performed by a PH signal, D[1:0] is compared with the PH signal by the comparator **437** to output an EN signal which becomes "1" (high) under the condition of PH≧D[1:0] and "0" under the condition of PH>D[1:0].

The gray scale voltage selecting unit **417** is constituted of 8-to-1 selectors **438** as many as the number of signal lines **104** of the liquid crystal panel **401** and the switch circuit **439**. In this case, when an EN signal transferred from the comparison computing unit **416** is "1" (high), the switch circuit **439** is turned on and the 8-to-1 selector **438** selects and outputs one of the gray scale voltages V**0**B to V**7**B in accordance with the value of D[4:2] which is high-order three bit of the display data. For example, when D[4:2] is 000, V**0**B is selected and outputted, and when D[4:2] is 111, V**7**B is selected and outputted. Meanwhile, when the EN signal is 0, the switch circuit **439** is turned off regardless of the value of D[4:2] and an output becomes high-impedance. Note that an output of the gray scale voltage selecting unit **417** is connected to the signal line **104** of the display panel **401** via the signal line **490**.

The first register switch circuit **424** sequentially switches register values transferred from the amplitude adjustment registers **418** and **420** in accordance with a PH_1 signal transferred from the timing controller **408**. Then, the register switch circuit **424** transfers its value to the variable resistors **427** and **428** in the first reference voltage generating unit **412**. Similarly, the second register switch circuit **425** sequentially switches register values transferred from the amplitude adjustment resistors **419** and **421** in accordance with a PH_2 signal transferred from the timing controller **408**. Then, the register switch circuit **425** transfers its value to a variable resistor in the second reference voltage generating unit **413**. In this case, it is assumed that register values of the amplitude adjustment registers **418** and **420** of an odd-number gray scale group are transferred to the first register switch circuit **424** regardless of the polarity of an applied voltage and register values of the amplitude adjustment registers **419** and **421** of an even-number gray scale group are transferred to the second register switch circuit **425** regardless of the polarity of the applied voltage.

Next, control of registers and switches according to this first embodiment will be described with reference to FIG. **4**A. In FIG. **4**A, a reference numeral **501** denotes a gray scale voltage (output voltage) to be originally applied to the signal line **104** (pixel electrode) and **502** denotes an output voltage of the gray scale voltage time-division output unit **415** in this first embodiment.

First, display data is collectively transferred to the comparison computing unit **416**, the gray scale voltage selecting

unit **417**, and the 2-to-1 switch **433** from the latch circuit **411** at the rise timing of a line clock LP generated by the timing controller **408**. At the same time, a /PH signal generated by the timing controller **408** is transferred to the comparison computing unit **416** and the 4-to-1 elector **435**, and PH_1 and PH_2 signals are transferred to the register switch circuits **424** and **425**.

Note that the EN signal is generated by the comparison computing unit **416** as described above. Specifically, D[1:0] which is low-order two bit of the display data transferred from the latch circuit **411** is compared with a /PH signal to generate the EN signal.

The first register switch circuit **424** sequentially selects register values transferred from the positive amplitude adjustment registers **418** and **420** and negative amplitude adjustment register at the switch timing of a PH_1 signal transferred from the timing controller **408** and transfers them to the variable resistors **427** and **428**. As a result, resistance values of the variable resistors **427** and **428** are changed four times in the time corresponding to two scanning periods in accordance with the set values. Moreover, the second register switch circuit **425** sequentially selects register values transferred from the positive amplitude adjustment registers **419** and **421** and the negative amplitude adjustment register at the switch timing of a PH_2 signal transferred from the timing controller **408** and transfers them to the variable resistors in the second reference voltage generating unit **413**. As a result, the resistance values of the variable resistors are changed four times in the time corresponding to the two scanning periods in accordance with the set values.

Then, the 2-to-1 switch **433** selects an output voltage of the first reference voltage generating unit **412** or an output voltage of the second reference voltage generating unit **413** by the switch of the low-order one bit PH[0] of a PH signal. FIG. **4**A shows the case where an output voltage of the first reference voltage generating unit **412** is selected at PH[0]=0 and an output voltage of the second reference voltage generating unit **413** is selected at PH[0]=1. Therefore, the γ-characteristic is changed in the order of amplitude setting of positive first gray scale group, amplitude setting of positive second gray scale group, amplitude setting of positive third gray scale group, amplitude setting of positive fourth gray scale group, amplitude setting of negative first gray scale group, amplitude setting of negative second gray scale group, amplitude setting of negative third gray scale group, and amplitude setting of negative fourth gray scale group. Note that, when the 2-to-1 switch **433** selects the first reference voltage generating unit **412** and selects, for example, an output voltage of the positive first gray scale group, the unselected second reference voltage generating unit **413** generates an output voltage of the positive second gray scale group. Consequently, the outputs of the first and second reference voltage generating units (**412** and **413**) can determine the voltage before the selection by the 2-to-1 switch **433**, and a problem such as delay does not occur in the convergence at the time of the switching of the amplitude setting.

The 4-to-1 selector **435** sequentially selects one level of gray scale voltage from the four levels of adjacent gray scale voltages in accordance with a /PH signal and an operational amplifier circuit **436** serving as a voltage follower transfers the voltage to the gray scale voltage selecting unit **417**. The voltages V**0**B to V**7**B which are the outputs of the eight operational amplifiers **436** are changed stepwise from low voltage side to high voltage side as shown in FIG. **4**A. Also, the feature of this embodiment lies in that each of V**0**B to V**7**B is the output voltage **502** obtained by adding a voltage fluctuation value ΔVy to the gray scale voltage (output voltage) **501** to be originally applied to the signal line **104** (pixel electrode) when an applied voltage polarity is positive and that obtained by subtracting a voltage fluctuation value ΔVy from the gray scale voltage **501** when the applied voltage polarity is negative.

FIG. **4**B shows characteristics of gray scale numbers and gray scale voltages of output voltages outputted in one scanning period in the gray scale voltage time-division output unit **415**. A reference numeral **503** denotes a gray scale number-gray scale voltage characteristic of the first gray scale group. Similarly, a reference numeral **504** denotes the characteristic of second gray scale group, **505** denotes the characteristic of third gray scale group, and **506** denotes the characteristic of fourth gray scale group. The voltage levels other than that of the gray scale number-gray scale voltage characteristic **506** are obtained by adding or subtracting the voltage fluctuation value ΔVy and a characteristic similar to the gray scale number-gray scale voltage characteristic in FIG. **2**B is obtained. FIG. **4**C is an enlarged view of the portion of gray scale numbers **4** to **9** in FIG. **4**B. When a voltage drop corresponding to each high-impedance period occurs, it can be expected that the gray scale number-gray scale voltage characteristics **503** to **505** become the same characteristic as the gray scale number-gray scale voltage characteristic **506** of the fourth gray scale group in which voltage drop does not occur. Consequently, it is possible to avoid the steak-like image quality deterioration which occurs in the prior art.

According to the circuit configuration and operation timing described above, even when the current leakage path **106** is present in the liquid crystal panel **401** of a liquid crystal display having the driver of this first embodiment, the first driving method can be applied. Therefore, it is possible to achieve the multi-gray scale display with small steady current and small-scale circuit and reduce the image quality deterioration due to the driving method.

Note that, in the first embodiment, the output voltage Vx to the signal line **104** is changed stepwise from low gray scale side to high gray scale side. However, the output voltage can also be changed stepwise from high gray scale side to low gray scale side as long as the change direction of the gray scale voltage is fixed in one scanning period. Moreover, though two register switch circuits and two reference voltage generating units are disposed, it is allowed to dispose one register switch circuit and one reference voltage generating unit. In this case, resistance values of the variable resistors **427** and **428** are changed eight times in two scanning periods by sequentially switching register values of positive amplitude adjustment registers (**418** to **421**) and the register value of the negative amplitude adjustment register for each divided period. Moreover, though input display data is described as five bits, it is allowed that the display data is 6 bits. Also, although the case where the gray scale voltage selecting unit **417** selects a voltage from adjacent gray scale voltages of four levels changed stepwise in one scanning period has been described, a configuration of selecting a voltage from gray scale voltages of two levels is also available. Moreover, though a driver including the display memory (**410**) and a liquid crystal display have been described, the present embodiment can be applied to a driver not including a display memory. Furthermore, in the case of this embodiment, a method for generating a γ-characteristic curve for each gray scale group has been described with using a case of applying the amplitude adjusting function disclosed in JP-A No. 2005-49868 as an example. However, it is also possible to apply the present invention to other adjusting functions.

Second Embodiment

A configuration and operations of the second embodiment will be described below with reference to FIG. **5** and FIG. **6**.

Though the γ-characteristic is switched in each divided period in one scanning period H in the above-described first embodiment, the gray scale voltage generating unit does not switch the γ-characteristic in one scanning period and the voltage level of a gray scale voltage is adjusted in accordance with the above-described fluctuation value ΔVy in the second embodiment.

FIG. **5**A shows a system (liquid crystal display) including the driver of the second embodiment. FIG. **5**B shows a configuration of the circuit portion (B) in FIG. **5**A. FIG. **5**C shows a register setting example in FIG. **5**B. FIG. **6**A is the timing chart of each signal showing the control of a register and a switch in the driving method of the second embodiment. FIG. **6**B and FIG. **6**C show gray scale number-gray scale voltage characteristics in this driving method.

In FIG. **5**A, configurations and operations of blocks other than a control register **601**, a timing controller **603**, a reference voltage generating unit **412**, a gray scale voltage generating unit **604**, and a comparison computing unit **608** are the same as those of the first embodiment. The gray scale voltage generating unit **604** has a ladder resistor **605**, operational amplifier circuits **606**, and an output ladder resistor **607**.

The control register **601** includes an inter-gray-scale-voltage adjustment register **602**, a slope adjustment register and fine adjustment register **422**, and a divided period adjustment register **423**. A register for the γ adjusting function is disposed for each polarity of the applied voltage for driving the liquid crystal panel **401**. However, the slope adjustment register and fine adjustment register **422** are not always necessary. Also, the amplitude adjustment register can be provided though the register is omitted in FIG. **5**A.

The timing controller **603** has a dot counter and generates a line clock LP based on the dot clock inputted from outside. Moreover, similar to the first embodiment, the controller **603** generates a PH signal for specifying the divided period of each gray scale group based on the divided period information transferred from the division period adjustment register **423**, and the PH signal is used by a comparator **610** in a comparison computing unit **608** described later. Meanwhile, the timing controller **603** generates a signal obtained by reversing all bits of a PH signal when M="0" and a PH_M signal which becomes a PH signal when M="1" based on an M signal showing the polarity of a voltage applied to liquid crystal. Note that the PH_M signal is used in the 4-to-1 selector **435**.

In the above-described first embodiment, the reference voltage generating unit **412** changes resistance values of the variable resistors **427** and **428** for each gray scale group to generate four types of γ-characteristic curves shifted by the voltage fluctuation value ΔVy, and the image quality deterioration is reduced by switching the characteristics in each division periods. Meanwhile, this second embodiment does not change the resistance values of the variable resistors **427** and **428** in one scanning period as described above.

The gray scale voltage generating unit **604** is constituted of a ladder resistor **605** for generating gray scale voltages of 32 levels through resistance division based on a reference voltage transferred from the reference voltage generating unit **412**, operational amplifier circuits **606** for buffering each four gray scales, that is, voltage levels corresponding to V**0**, v**4**, . . . , and V**29** from the voltage levels generated by the ladder resistor **605**, and an output ladder resistor **607** for generating a voltage level obtained by adding or subtracting the above-described voltage fluctuation value ΔVy. Note that the operational amplifier circuit **606** is disposed so as to prevent an output voltage of the gray scale voltage generating unit **604** from being determined by a partial voltage generated by the combined resistance of the ladder resistor **605** and the output ladder resistor **607**.

As shown in FIG. **5**B, the output ladder resistor **607** has a variable resistors **611** and **614** and resistors **612** and **613**. The output ladder resistor **607** generates three levels through resistance division of four resistors (**611** to **614**) between outputs of the operational amplifier circuits **606**. Among these four resistors, two resistors (**611** and **614**) near the outputs of the operational amplifier circuits **606** are variable resistors. Moreover, resistance values of the resistors (**611** and **614**) can be set in accordance with a two-bit set value stored in the inter-gray-scale-voltage adjustment register **602** as shown in FIG. **5**C. For example, four types of 5R, 10R, 25R, and 50R can be set. In this case, R is a constant resistance value.

Output voltages of the output ladder resistor **607**, for example, V**5** to V**7** can be obtained by the following expressions 2 to 4. For example, when increasing the resistance value of the variable resistor **614**, terms of the portions other than (V**4**−V**8**) and +V**8** of expressions 2 to 4 become a value close to 1. Therefore, it is possible to raise only V**5**, V**6**, and V**7** to a high potential at the V**4** side while fixing V**4** level and V**8** level. Moreover, when increasing the resistance value of the variable resistor **611**, terms of the same portions of expressions 2 to 4 become a value close to 0. Therefore, it is possible to lower only V**5**, V**6**, and V**7** to a low potential at the V**8** side while fixing V**4** level and V**8** level. In the following, for example, r**612** is assumed as the resistance value of the resistor **612**.

$$V5=(V4-V8)\times(r612+r613+r614)/(r611+r612+r613+r614)+V8 \quad \text{Expression 2}$$

$$V6=(V4-V8)\times(r613+r614)/(r611+r612+r613+r614)+V8 \quad \text{Expression 3}$$

$$V7=(V4-V8)\times(r614)/(r611+r612+r613+r614)+V8 \quad \text{Expression 4}$$

Therefore, when the polarity of a voltage applied to liquid crystal is positive polarity and M="0", the signal line voltage Vdata is higher than the opposite electrode voltage Vcom and the voltage level of the signal line voltage Vdata is lowered by current leakage. Therefore, the resistance value of the variable resistor **614** is increased and the voltage fluctuation value ΔVy is added to the signal line voltage Vdata. Also, when the polarity of a voltage applied to liquid crystal is negative and M="1", the signal line voltage Vdata is lower than the opposite electrode voltage Vcom and the voltage level of the signal line voltage Vdata is raised by current leakage. Therefore, the resistance value of the variable resistor **611** is increased and the voltage fluctuation value ΔVy is added to the signal line voltage Vdata.

In this case, in FIG. **5**B, resistance values r**612** and r**613** of the resistors **612** and **613** of the above-described four resistors are fixed to 5R. However, the configuration in which the resistances values are adjustable is also available. Also, as shown in FIG. **5**C, resistance values r**611** and r**614** of the variable resistors **611** and **614** can be selected by two bits of the set value of the inter-gray-scale-voltage adjustment register **602**. However, the number of bits is not limited to two bits. In general, although the number of switch circuits can be decreased and it is possible to reduce a circuit scale as the number of adjustment bits is decreased, since the adjustment width and adjustment accuracy are correspondingly lowered, sufficient image quality improvement effect may not be expected. Therefore, it is preferable to decide the number of adjustment bits and settable resistance value by considering the relation between the divided periods in one scanning

period and the value of the impedance Rleak of the current leakage path **106** in the liquid crystal panel **401**.

The comparison computing unit **608** is constituted of reversing units **609** and comparators **610**. The reversing unit **609** receives low-order two bit D[1:0] of the display data D[4:0] and an M signal showing the polarity of an applied voltage from the latch circuit **411**, and it transfers a signal obtained by reversing all bits of D[1:0] to the comparator **610** in the case of positive polarity and M="0" and transfers D[1:0] to the comparator **610** in the case of negative polarity and M="1". In this case, when assuming an output signal of the reversing unit **609** as C[1:0], the comparator **610** compares C[1:0] with a PH signal transferred from the timing controller **603** and outputs an EN signal which becomes "1" (high) under the condition of PH≦C[1:0] and becomes "0" (low) under the condition of PH>C[1:0]. Operations from the gray scale voltage selecting unit **417** are the same as those of the first embodiment.

Next, controls of a register and a switch in this embodiment will be described below with reference to FIG. **6**A. In FIG. **6**A, a reference numeral **701** denotes an ideal gray scale voltage (output voltage) and **702** denotes an output voltage of the gray scale voltage time-division output unit **415** in this second embodiment.

First, a transfer method of a line clock LP and display data D[4:0] up to the comparison computing unit **608** is the same as that of the first embodiment. Regarding the inter-gray-scale-voltage adjustment, which is a feature of the embodiments of the present invention, register values retained in the inter-gray-scale-voltage adjustment registers **602** for positive and negative polarities are transferred to the variable resistors **611** and **614** in synchronization with a switch timing of an M signal indicating the polarity of the applied voltage by the timing controller **603**.

Moreover, an EN signal is generated by using a PH signal and C[1:0] which is a signal obtained by normally rotating D[1:0] at M signal="0" and reversing D[1:0] at M signal="1" in accordance with operations of the above-described comparison computing unit **608**.

In this case, the 4-to-1 selector **435** sequentially selects one level from the adjacent four level gray scale voltages in accordance with a PH_M signal, and the operational amplifier circuit **436** serving as a voltage follower transfers its voltage to the gray scale voltage selecting unit **417**. The voltages V**0**B to V**7**B which are the outputs of eight operational amplifier circuits **436** are changed stepwise from low voltage side to high voltage side in the case of M signal="0" and positive polarity. Moreover, the voltages V**0**B to V**7**B are changed stepwise from high voltage side to low voltage side in the case of M signal="1" and negative polarity with respect to the gray scale voltage **701** to be originally applied to the signal line (pixel electrode). Also, the feature of this embodiment lies in that each of V**0**B to V**7**B is the output voltage **702** obtained by adding a voltage fluctuation value ΔVy to the gray scale voltage **701** to be originally applied to the signal line (pixel electrode) when an applied voltage polarity is positive and that obtained by subtracting a voltage fluctuation value ΔVy from the gray scale voltage **701** when the applied voltage polarity is negative.

In FIG. **6**B, a reference numeral **703** denotes the gray scale number-gray scale voltage characteristic in the gray scale voltage time-division output unit **415**, in which the same characteristic as that of the case of the reference numeral **301** in FIG. **2**B is obtained. As a result, it is possible to avoid streak-like image quality deterioration which occurs in the prior art.

According to the above-described circuit configuration and operation timing, the first driving method can be applied to the display device having the driver of this second embodiment even when the current leakage path **106** is inserted into the liquid crystal panel **401**. Therefore, it is possible to achieve the multi-gray scale display with small steady current and small scale circuit and decrease the image quality deterioration due to the driving method.

Note that, in the second embodiment, one reference voltage generating unit **412** is provided. However, it is also possible to provide two reference voltage generating units for each polarity of an applied voltage. Moreover, it is allowed that the input display data is 6 bits, and the present embodiment can be applied to a driver not including a display memory. Furthermore, in the second embodiment, the variable resistors **611** and **614** are disposed in the gray scale voltage generating unit **604** in order to achieve the feature of the present invention. However, other circuit configuration can be used as the driver as long as the gray scale number-gray scale voltage characteristic shown in FIG. **6**B can be obtained.

Third Embodiment

A configuration and operations of third embodiment will be described below with reference to FIG. **7**. In the third embodiment, the above-described first embodiment is combined with RGB time-division driving in which one scanning period is divided into three periods and the three periods are allocated to the signal lines **104** (R line, G line, and B line) of the liquid crystal panel **401**, so that the γ-characteristic can be individually adjusted for each of display colors R (Red), G (Green), and B (Blue) which are display colors of the liquid crystal panel **401**.

FIG. **7**A shows a system (liquid crystal display) including the driver of the third embodiment. FIG. **7**B is a timing chart of each signal showing the control of a register and a switch in the driving method of the third embodiment.

In FIG. **7**A, the control register **407** of the first embodiment is individually provided for R, G, and B. Note that configurations and operations of blocks other than the timing controller **805** and register switch circuits **806** and **807** are basically the same as those of the first embodiment. However, a RGB time-division switch **808** is added to the latter stage of the gray scale voltage selecting unit **417**.

A control register **801** includes a RGB selecting period adjustment register **802** used to perform the RGB time-division driving. For the γ adjusting function, a R-line control register **407***b* and a G-line control register **803** and a B-line control register **804** having the same configuration as the R-line control register **407***b* are independently disposed.

The timing controller **805** has a dot counter and generates a line clock LP based on a dot clock inputted from outside. Also, the timing controller **805** generates a signal RSW which becomes "1" (high) in a R-line selecting period in one scanning period and becomes "0" in a R-line non-selecting period from the R-line selecting period information transferred from the RGB selecting period adjustment register **802**, a signal GSW which becomes "1" (high) in a G-line selecting period in one scanning period and becomes "0" in a G-line non-selecting period from the G-line selecting period information, and a signal BSW which becomes "1" (high) in a B-line selecting period in one scanning period and becomes "0" in a B-line non-selecting period from the B-line selecting period information. Note that the signals RSW, GSW, and BSW are used by register switch circuits **806** and **807** and a RGB time-division switch **808** described later.

Also, the timing controller **805** generates a PH signal for specifying divided periods of gray scale groups in R-line, G-line, and B-line selecting periods based on the divided period information transferred from the divided period adjustment register **423**. In this case, the gray scale groups mentioned here are a first gray scale group including gray scale numbers of 4n, a second gray scale group including gray scale numbers of 4n+1, a third gray scale group including gray scale numbers of 4n+2, and a fourth gray scale group including gray scale numbers of 4n+3 in 32 gray scale numbers. In this case, a PH signal is a two-bit signal which changes as 00, 01, 10, and 11 in R-line, G-line, and B-line selecting periods and is used in a gray scale voltage generating unit **414** described later. Moreover, the timing controller **805** also outputs a reverse signal /PH of a PH signal and /PH is used in the gray scale voltage time-division output unit **415**.

The first register switch circuit **806** is inputted with amplitude adjustment register values of a positive first gray scale group, positive third gray scale group, negative first gray scale group, and negative third gray scale group from the R-line control register **407***b*, amplitude adjustment register values of the positive first gray scale group, positive third gray scale group, negative first gray scale group, and negative third gray scale group from the G-line control register **803**, and amplitude adjustment register values of the positive first gray scale group, positive third gray scale group, negative first gray scale group, and negative third gray scale group from the B-line control register **804**. Then, the first register switch circuit **806** sequentially selects the above-described register values based on RSW, GSW, and BSW generated by the timing controller **805** and the PH_1 signal similar to that of the above-described first embodiment and transfers them to the variable resistors **427** and **428** of the first reference voltage generating unit **412**.

Also, the second register switch circuit **807** is inputted with amplitude adjustment register values of a positive second gray scale group, positive fourth gray scale group, negative second gray scale group, and negative fourth gray scale group from the R-line control register **407***b*, amplitude adjustment register values of the positive second gray scale group, positive fourth gray scale group, negative second gray scale group, and negative fourth gray scale group from the G-line control register **803**, and amplitude adjustment register values of the positive second gray scale group, positive fourth gray scale group, negative second gray scale group, and negative fourth gray scale group from the B-line control register **804**. Then, the second register switch circuit **807** sequentially selects the above-described register values based on RSW, GSW, and BSW generated by the timing controller **805** and the PH_2 signal similar to that of the above-described first embodiment and transfers them to the variable resistor of the second reference voltage generating unit **413**. Note that selection order of register values will be described later with reference to FIG. **7**B.

The RGB time-division switch **808** provided in the third embodiment is constituted of switches (**809** to **810**) as many as the number of signal lines **104** of the liquid crystal panel **401**, and one ends of the switches are connected to the signal lines **104** of the liquid crystal panel **401**. Also, the other ends of the R line, G line, and B line which are the adjacent signal lines **104** are connected to the same switch circuit **439**. In this case, the switch circuit **809** is controlled by RSW transferred from the timing controller **805**, and is turned on at RSW="1" and turned off at RSW="0". Also, the switch circuit **810** and the switch circuit **811** are similarly controlled in accordance with GSW and BSW, respectively. Consequently, the liquid crystal panel **401** can be driven through the time division of RGB. Therefore, since only one 8-to-1 selector **438** is enough for three signal lines **104** of RGB, it is possible to reduce the circuit scale.

Then, controls of a register and a switch of this third embodiment will be described below with reference to FIG. **7**B. In FIG. **7**B, a reference numeral **812** denotes a gray scale voltage (output voltage) to be originally applied to a signal line (pixel electrode) and **813** denotes an output voltage of the gray scale voltage time-division output unit **415** in the third embodiment.

First, RSW, GSW, and BSW are generated for the line clock LP in accordance with the R-line selecting period, G-line selecting period, and B-line selecting period set by the RGB selecting period adjustment register **802**. Then, the first register switch circuit **806** changes resistance values of the variable resistors **427** and **428** in the first reference voltage generating unit **412** in accordance with the PH_1 signal generated by the timing controller **805** and RSW, GSW, and BSW signals to execute γ adjustment by means of amplitude adjustment. Similarly, the second register switch circuit **807** changes resistance values of the variable resistor in the second reference voltage generating unit **413** in accordance with the PH_2 signal generated by the timing controller **805** and RSW, GSW, and BSW signals to execute γ adjustment by means of amplitude adjustment.

A feature of this embodiment lies in that each of V**0**B to V**7**B is an output voltage **813** obtained by adding a voltage fluctuation value ΔV*y different for each of R line, G line, and B line to the gray scale voltage (output voltage) **812** to be originally applied to a signal line (pixel electrode) when an applied voltage polarity is positive and that obtained by subtracting the voltage fluctuation value ΔV*y different for each of R line, G line, and B line when the applied voltage polarity is negative.

As described above, in the third embodiment, the γ-characteristics of R, G, and B which are display colors of the liquid crystal panel **401** can be individually adjusted. Consequently, it is possible to realize a liquid crystal display capable of achieving the low power consumption and reduction in circuit scale in accordance with the gray scale time-division method, reduction in image quality deterioration by the above-described first embodiment, and higher image quality by this embodiment.

Note that, in the third embodiment, the output voltage Vx to the signal line **104** is changed stepwise from low gray scale side to high gray scale side. However, the output voltage can also be changed stepwise from high gray scale side to low gray scale side as long as the change direction of the gray scale voltage is fixed in one scanning period. Also, similar to the first embodiment, it is allowed that the input display data is 6 bits. Also, although the case where the gray scale voltage selecting unit **417** selects a voltage from adjacent gray scale voltages of four levels changed stepwise in selecting periods of the R line, G line and B line has been described, a configuration of selecting a voltage from gray scale voltages of two levels is also available. Further, the present embodiment can be applied to a driver not including a display memory. In addition, this third embodiment has been described based on the case where the RGB time-division switch **808** is disposed in the signal line driving unit **402**. However, it is allowed to include a switch corresponding to the RGB time-division switch **808** in the liquid crystal panel **401**. Furthermore, this third embodiment can adjust the γ-characteristic for each of R, G, and B on the basis of the configuration of the above-described first embodiment. However, it is also allowed that R, G, and B can be individually adjusted on the basis of the configuration of the above-described second embodiment.

In the foregoing, the invention made by the inventors of the present invention has been concretely described based on the embodiments. However, it is needless to say that the present invention is not limited to the foregoing embodiments and various modifications and alterations can be made within the scope of the present invention.

The present invention can be used for a display driving circuit (display driver) and a display device.

What is claimed is:

1. A display driver for a display panel which includes a signal line on one side of the panel and an opposite electrode on an opposite side of the panel, wherein a current leakage path exists between the signal line and the opposite electrode when a voltage is applied to the signal line, comprising:

a generating circuit for generating gray scale voltages corresponding to each of a plurality of gray scales; and

a selecting circuit for selecting a gray scale voltage to be outputted to the signal line of the display panel in accordance with inputted display data,

wherein said selecting circuit selects a gray scale voltage to be outputted to said signal line from the gray scale voltages outputted through time division from said generating circuit for each signal line and controls a length of a period for outputting the selected gray scale voltage based on said display data,

said generating circuit is configured to generate the gray scale voltage whose level to an ideal voltage is fluctuated due to charge transfer through the current leakage path in accordance with each of a plurality of periods obtained by time-division of one scanning period for outputting said gray scale voltage to said signal line, and

said generating circuit generates the gray scale voltages whose levels differ in each divided period, which are obtained by adding or subtracting voltage fluctuation values corresponding to the charge transfer through the current leakage path to/from said gray scale voltage in each of the time-divided periods.

2. The display driver according to claim **1**,

wherein said generating circuit outputs a gray scale voltage in which said level is fluctuated stepwise from a high-potential gray scale voltage to a low-potential gray scale voltage or from a low-potential gray scale voltage to a high-potential gray scale voltage from among said gray scale voltages.

3. The display driver according to claim **1**,

wherein said generating circuit has a ladder resistor for dividing a reference voltage and variable resistors located between said ladder resistor and said reference voltage.

4. The display driver according to claim **3**, further comprising:

adjustment registers for adjusting the resistance values of said variable resistors.

5. The display driver according to claim **4**,

wherein said adjustment register sets an amplitude on a graph of a relation between a gray scale number and a gray scale voltage.

6. The display driver according to claim **5**, further comprising:

said adjustment registers as many as the number of time-divided periods of said the one scanning period; and

switch circuits for sequentially selecting set values stored in said adjustment registers.

7. The display driver according to claim **6**,

wherein said switch circuits transfer the set values stored in said adjustment registers to said variable resistors at the timing of time division.

8. A display driver for a display panel which includes a signal line on one side of the panel and an opposite electrode on an opposite side of the panel, wherein a current leakage path exists between the signal line and the opposite electrode when a voltage is applied to the signal line, comprising:

a generating circuit for generating gray scale voltages corresponding to each of a plurality of gray scales; and

a selecting circuit for selecting a gray scale voltage to be outputted to the signal line of the display panel in accordance with inputted display data,

wherein said selecting circuit selects a gray scale voltage to be outputted to said signal line from the gray scale voltages outputted through time division from said generating circuit for each signal line and controls a length of a period for outputting the selected gray scale voltage based on said display data,

said generating circuit is configured to generate the gray scale voltage whose level to an ideal voltage is fluctuated due to charge transfer through the current leakage path in accordance with each of a plurality of periods obtained by time-division of one scanning period for outputting said gray scale voltage to said signal line, and

said display driver includes means for outputting gray scale voltages whose levels differ in each divided period by performing level adjustment or conversion to the gray scale voltages generated by said generating circuit in accordance with voltage fluctuation values corresponding to the charge transfer through the current leakage path in each time-divided period in said signal line.

9. A display driver for a display panel which includes a signal line on one side of the panel and an opposite electrode on an opposite side of the panel, wherein a current leakage path exists between the signal line and the opposite electrode when a voltage is applied to the signal line, comprising:

a generating circuit for generating gray scale voltages corresponding to each of a plurality of gray scales; and

a selecting circuit for selecting a gray scale voltage to be outputted to the signal line of the display panel in accordance with inputted display data,

wherein said selecting circuit selects a gray scale voltage to be outputted to said signal line from the gray scale voltages outputted through time division from said generating circuit for each signal line and controls a length of a period for outputting the selected gray scale voltage based on said display data,

said generating circuit is configured to generate the gray scale voltage whose level to an ideal voltage is fluctuated due to charge transfer through the current leakage path in accordance with each of a plurality of periods obtained by time-division of one scanning period for outputting said gray scale voltage to said signal line,

said display driver divides said scanning period into three periods and performs the driving in combination with a driving method in which the three periods are allocated to R line, G line, and B line corresponding to display colors, which are the signal lines of said display panel, and

said display includes means for outputting gray scale voltages whose levels differ in each divided period, which are obtained by adding or subtracting voltage fluctuation values corresponding to the charge transfer through the current leakage path to/from a gray scale voltage generated in said generating circuit each time-divided period in said signal line for each of R, G, and B.

10. A display driver according to claim **1** for outputting a voltage corresponding to externally provided display data to a display panel, further comprising:

an output circuit for outputting a voltage which is changed stepwise in accordance with the divided periods in one horizontal period; and

a circuit for shifting the level of said voltage changed stepwise for each divided period.

11. A display driver according to claim **1** for outputting a voltage corresponding to externally provided display data to a display panel, further comprising:

an output circuit for outputting a voltage which is changed stepwise in accordance with the divided periods in one horizontal period;

a setting circuit for setting the level of said voltage changed stepwise for each divided period.

* * * * *

专利名称(译)	显示驱动程序		
公开(公告)号	US7924252	公开(公告)日	2011-04-12
申请号	US11/443224	申请日	2006-05-31
[标]申请(专利权)人(译)	AKAI明仁 工藤YASUYUKI ERIGUCHI TAKUYA OKADO KAZUO		
申请(专利权)人(译)	AKAI明仁 工藤YASUYUKI ERIGUCHI TAKUYA OKADO KAZUO		
当前申请(专利权)人(译)	瑞萨电子公司		
[标]发明人	AKAI AKIHITO KUDO YASUYUKI ERIGUCHI TAKUYA OKADO KAZUO		
发明人	AKAI, AKIHITO KUDO, YASUYUKI ERIGUCHI, TAKUYA OKADO, KAZUO		
IPC分类号	G09G3/36		
CPC分类号	G09G3/3688 G09G3/3696 G09G3/20 G09G3/3614 G09G2360/18 G09G2320/0219 G09G2320/0276 G09G2320/0673 G09G2330/021 G09G2310/0297		
优先权	2005261924 2005-09-09 JP		
其他公开文献	US20070057884A1		
外部链接	Espacenet USPTO		

摘要(译)
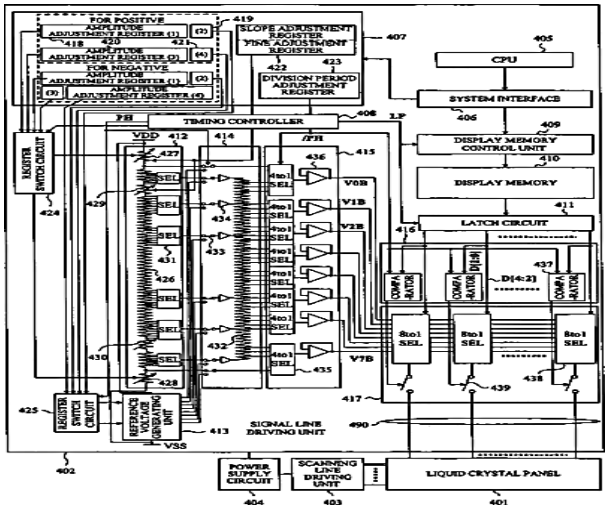
考虑到液晶面板的电流泄漏路径和由于电流泄漏路径引起的信号线电压波动，在第一驱动方法中对每个分割周期应用γ调整功能（第二驱动方法）。在信号线驱动单元中，产生通过加上或减去在每个灰度级的每个输出周期中不同的电压波动值而获得的灰度电压，并且将考虑电压波动值的灰度电压应用于信号线。