US 20060279681A1

(19) United States

(12) Patent Application Publication

(10) Pub. No.: US 2006/0279681 A1

(43) Pub. Date: Dec. 14, 2006

Kwon et al.

(54) LIQUID CRYSTAL DISPLAY PANEL AND REPAIRING METHOD THEREOF

(75) Inventors: **Oh Nam Kwon**, Yongin-si (KR); **Seung Hee Nam**, Suwon-si (KR)

Correspondence Address:
BRINKS HOFER GILSON & LIONE
P.O. BOX 10395
CHICAGO, IL 60610 (US)

(73) Assignee: LG PHILIPS LCD CO., LTD.

(21) Appl. No.: 11/205,983

(22) Filed: Aug. 17, 2005

(30) Foreign Application Priority Data

Jun. 13, 2005 (KR) P2005-50615
Aug. 5, 2005 (KR) P2005-71948

Publication Classification

(51) Int. Cl.
G02F 1/1333 (2006.01)

(52) U.S. Cl. 349/122

(57) ABSTRACT

A liquid crystal display penel includes a substrate, a hole disposed in the substrate, and an opaque substance filling in the hole. The hole is configured to be located in an area corresponding to a bright point. The liquid crystal display penel may minimize a defect ratio and improve a yield by darkening the bright point.

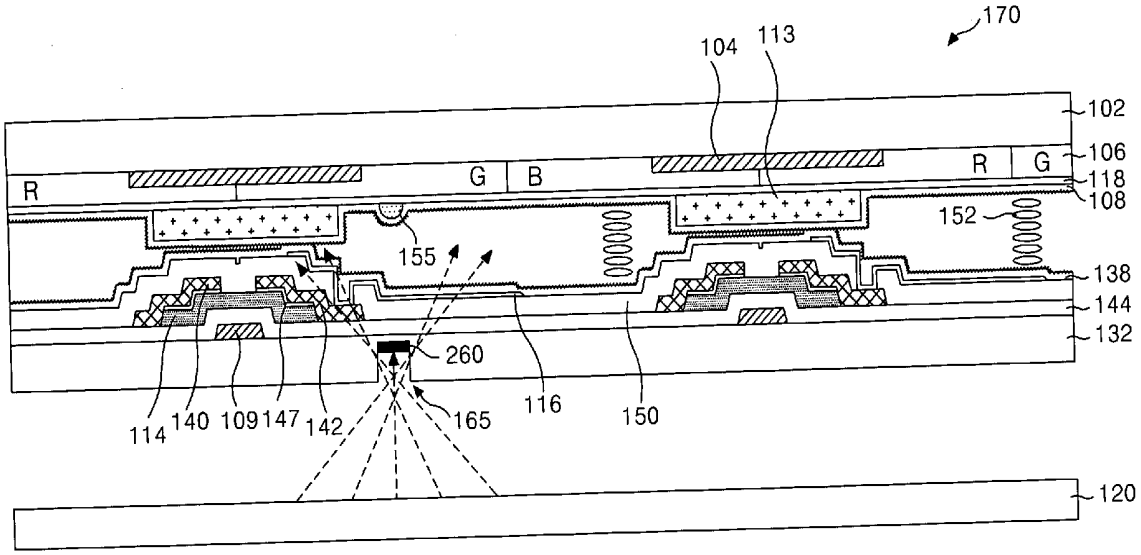

FIG. 1
RELATED ART

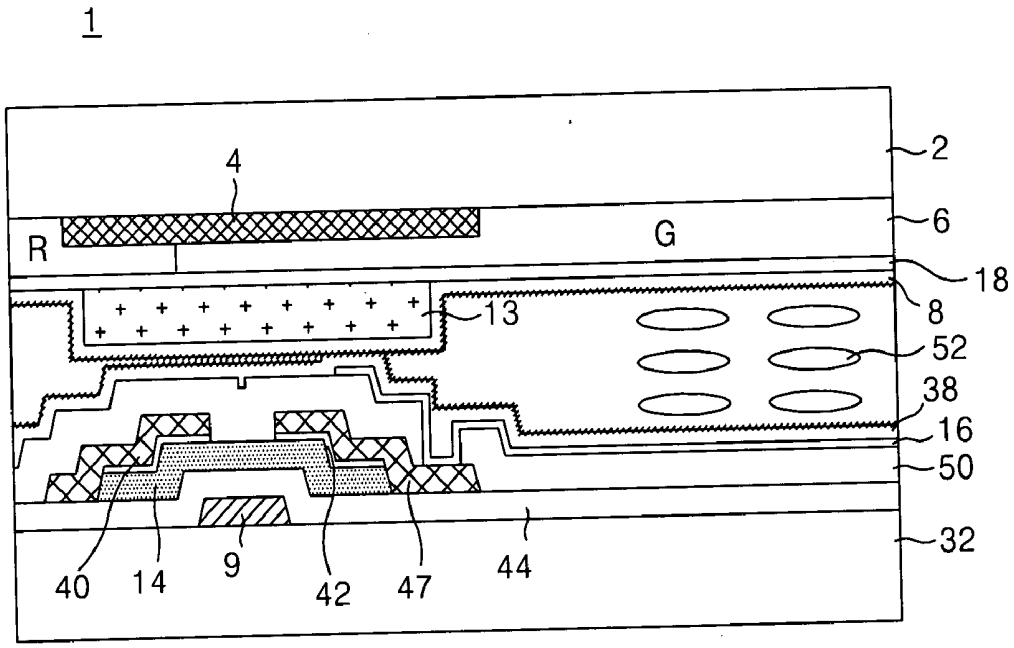

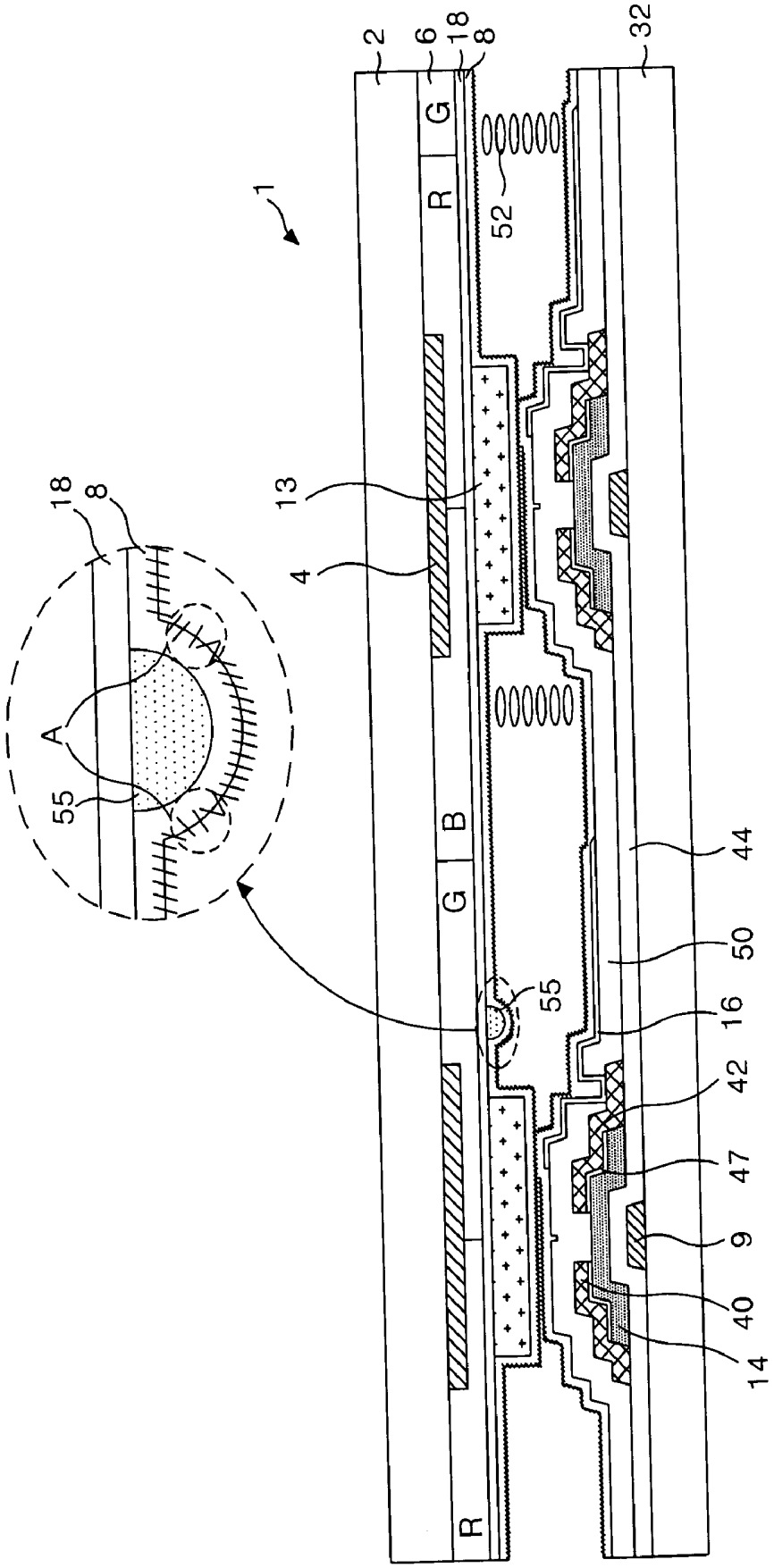

FIG. 2
RELATED ART

FIG.3
RELATED ART

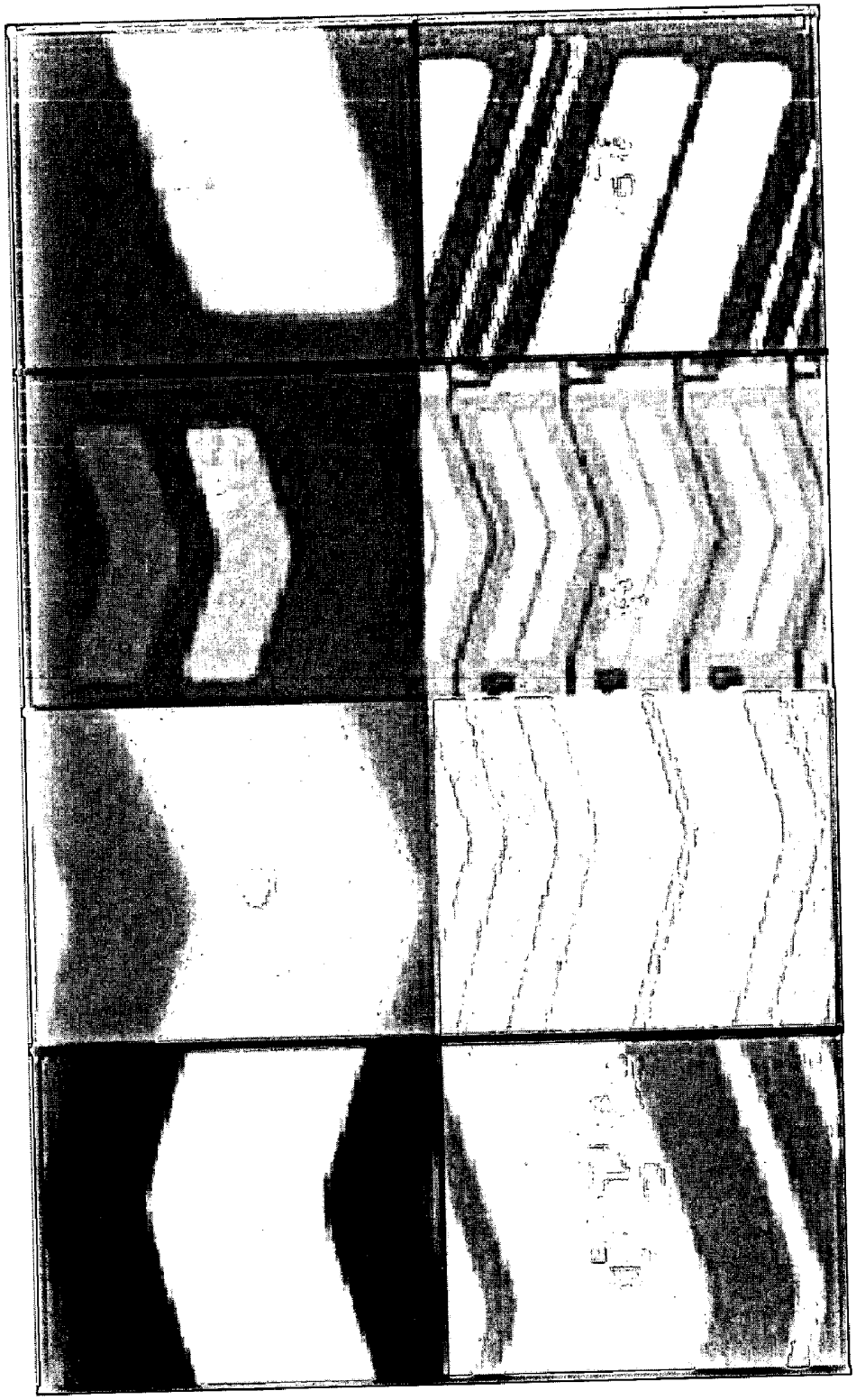

FIG. 4A

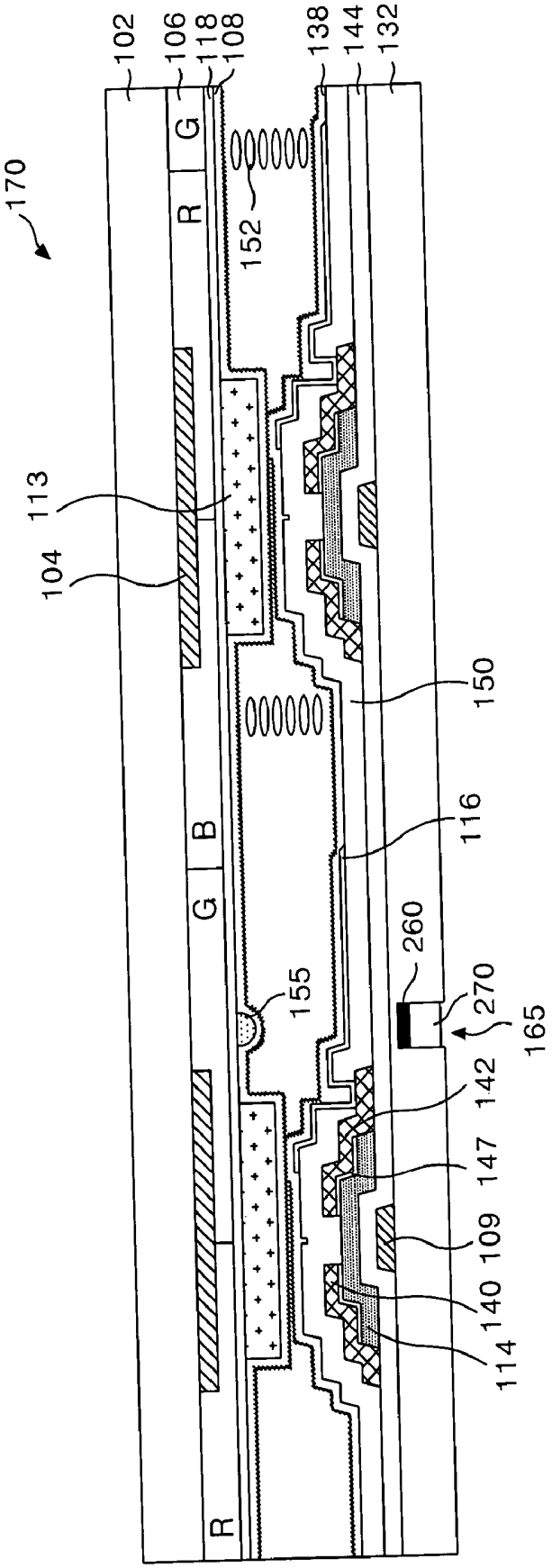
170
102
106
118
108
138
144
132
G
R
152
113
104
150
116
B
G
260
155
270
165
142
147
109
140
114
R

FIG. 4B

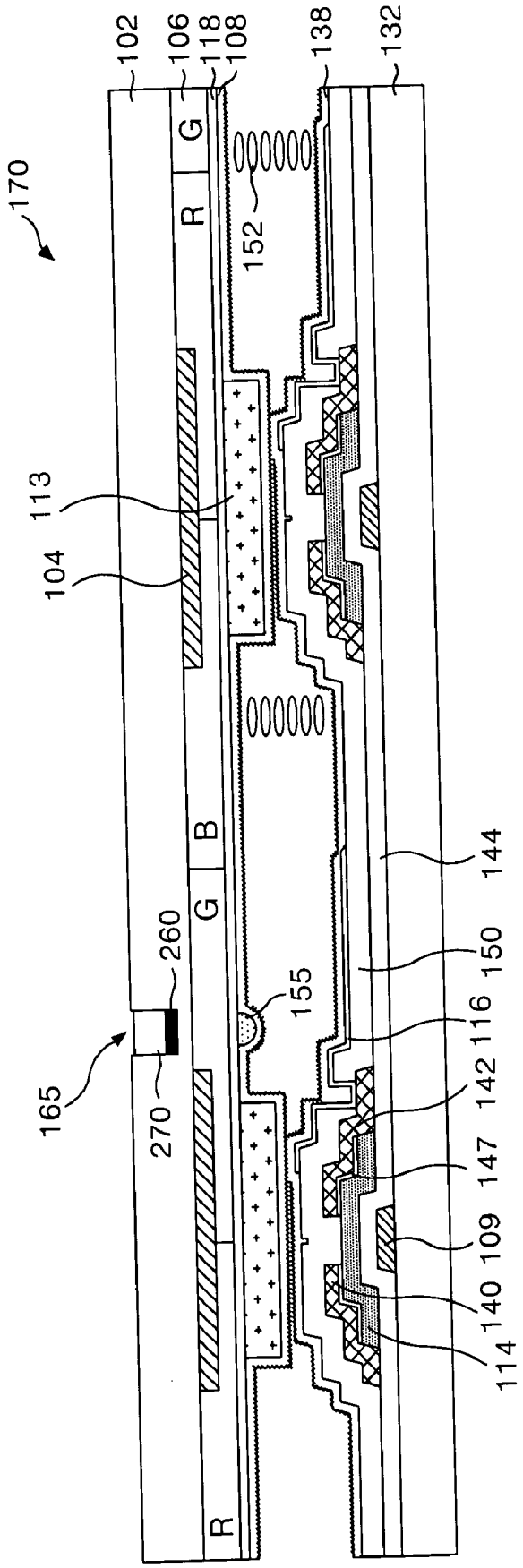
170
102
106
118
108
138
132
G
R
152
113
104
B
G
260
155
165
270
R
144
150
116
142
147
109
140
114

FIG.5A

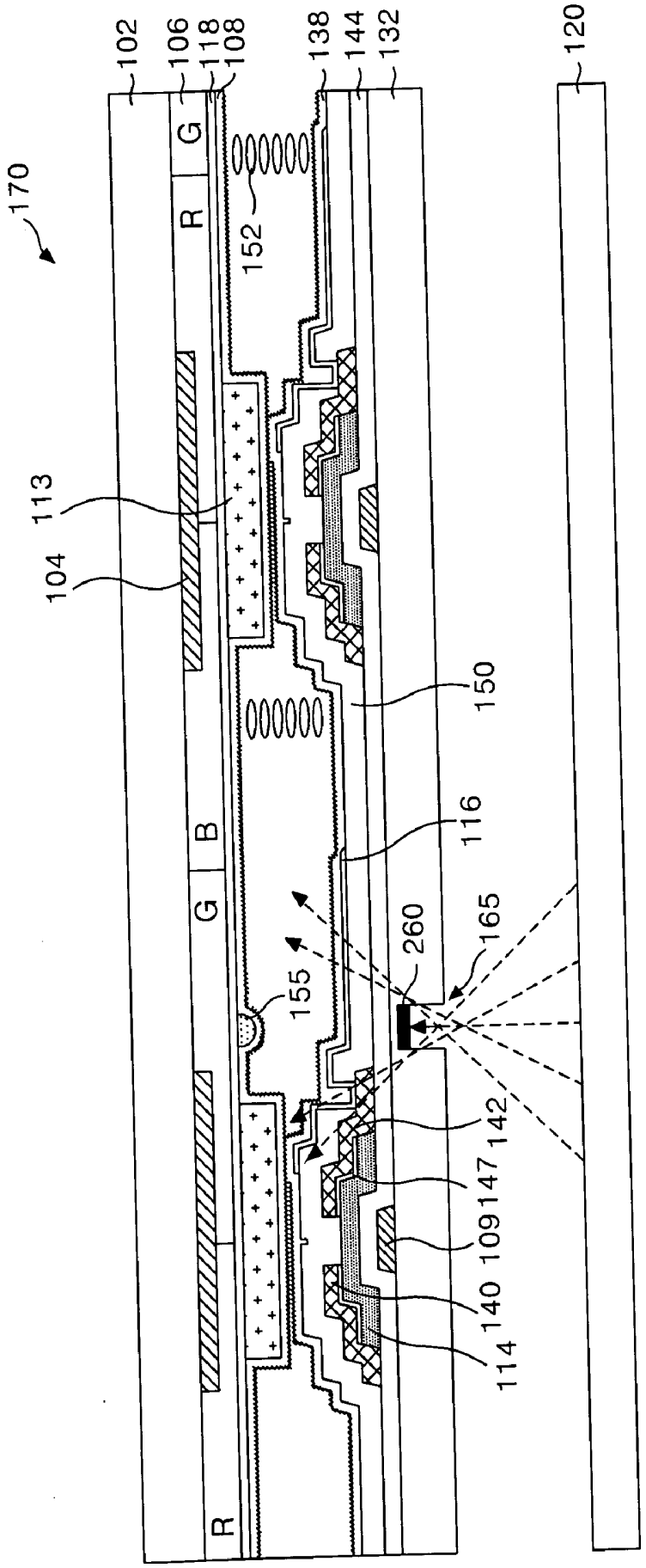
170
102
106
118
108
138
144
132
120
G
R
152
113
104
150
116
B
G
155
260
165
142
147
109
140
114
R

FIG.5B

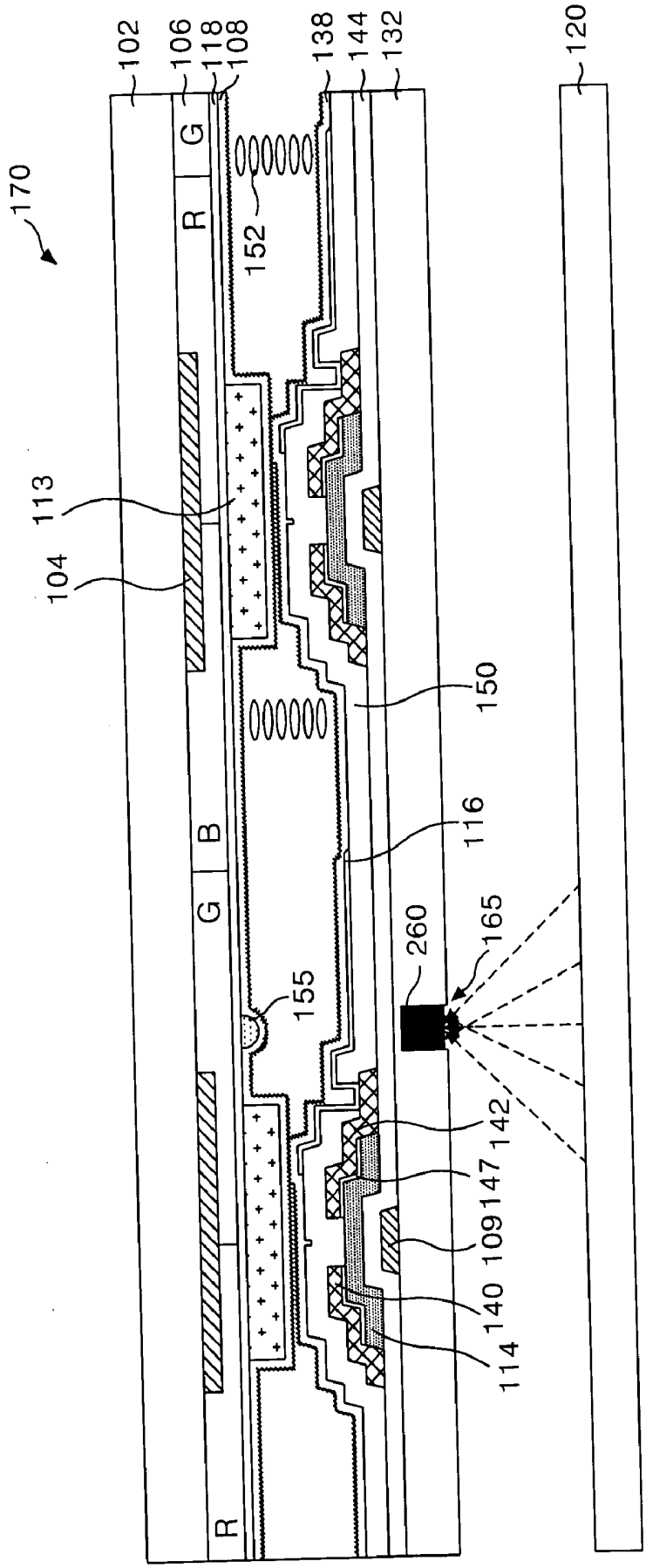
170
102
106
118
108
138
144
132
120
G
R
152
113
104
150
116
B
G
260
165
155
142
147
109
140
114
R

FIG.6A

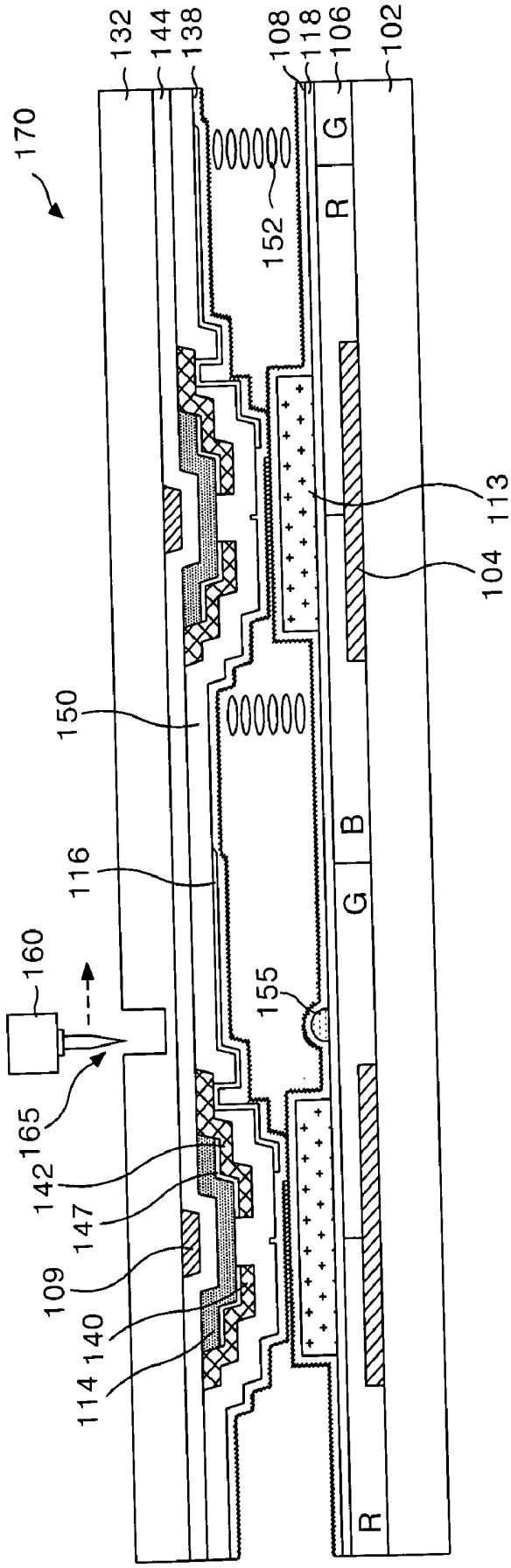
170
132
144
138
108
118
106
102
152
R
G
113
104
150
116
B
G
160
155
165
142
147
109
140
114
R

FIG.6B

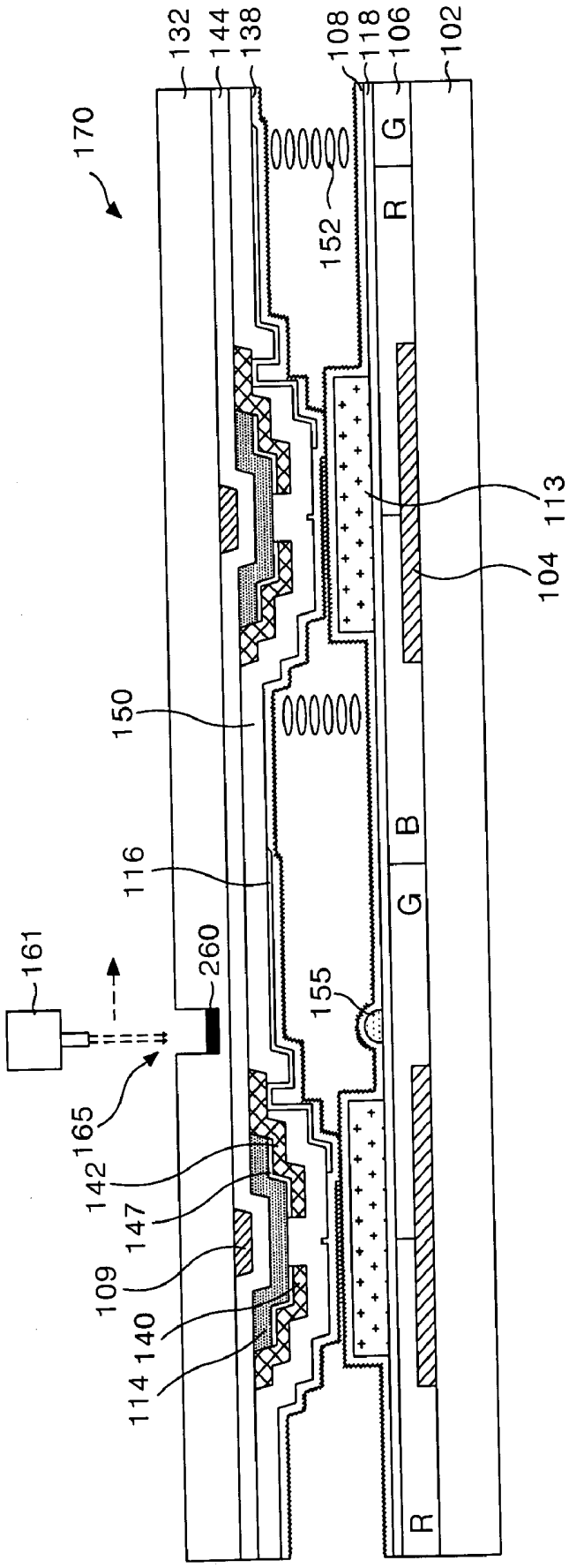
170
132
144
138
108
118
106
102
152
R
G
113
104
150
116
B
G
161
260
155
165
142
147
109
140
114
R

FIG.6C

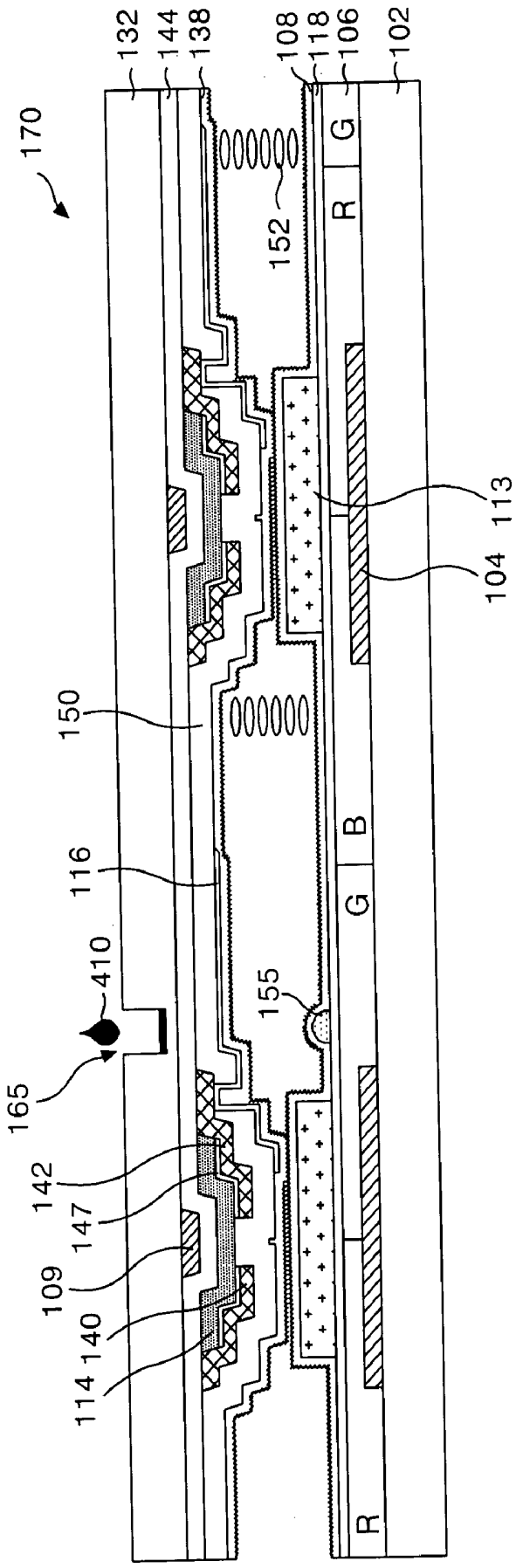
170
132
144
138
108
118
106
102
152
G
R
113
104
150
116
B
G
410
155
165
142
147
109
140
114
R

FIG.6D

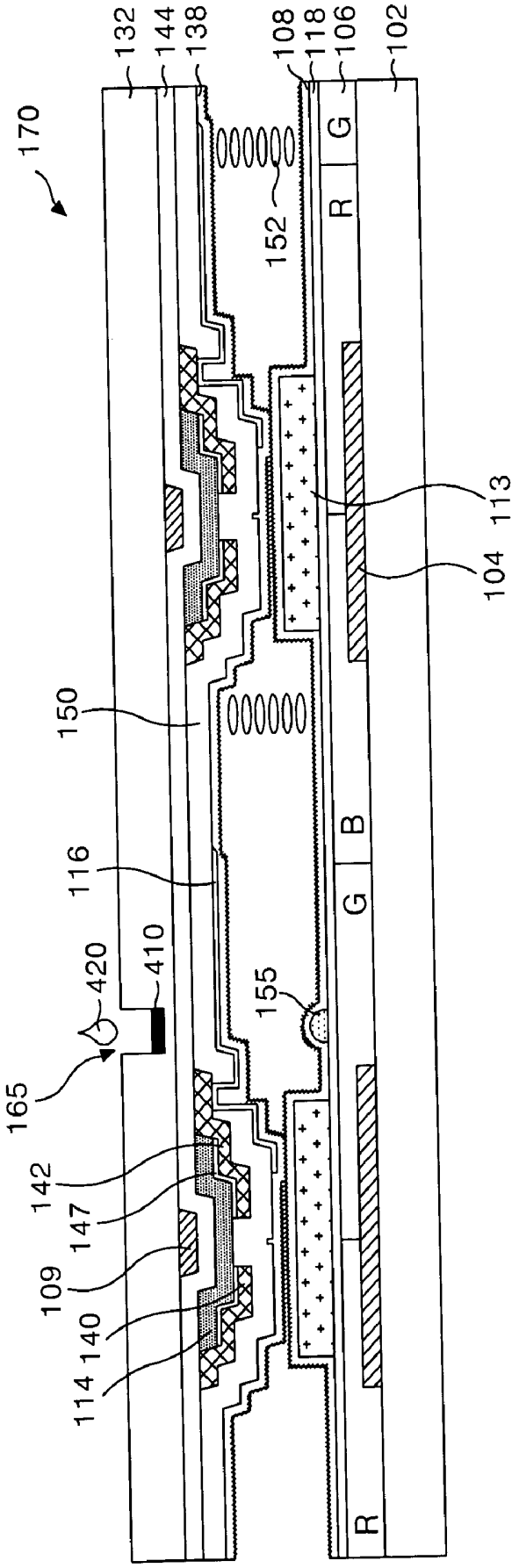
170
132
144
138
108
118
106
102
152
G
R
113
104
150
116
B
G
420
410
155
165
142
147
109
140
114
R

FIG.6E

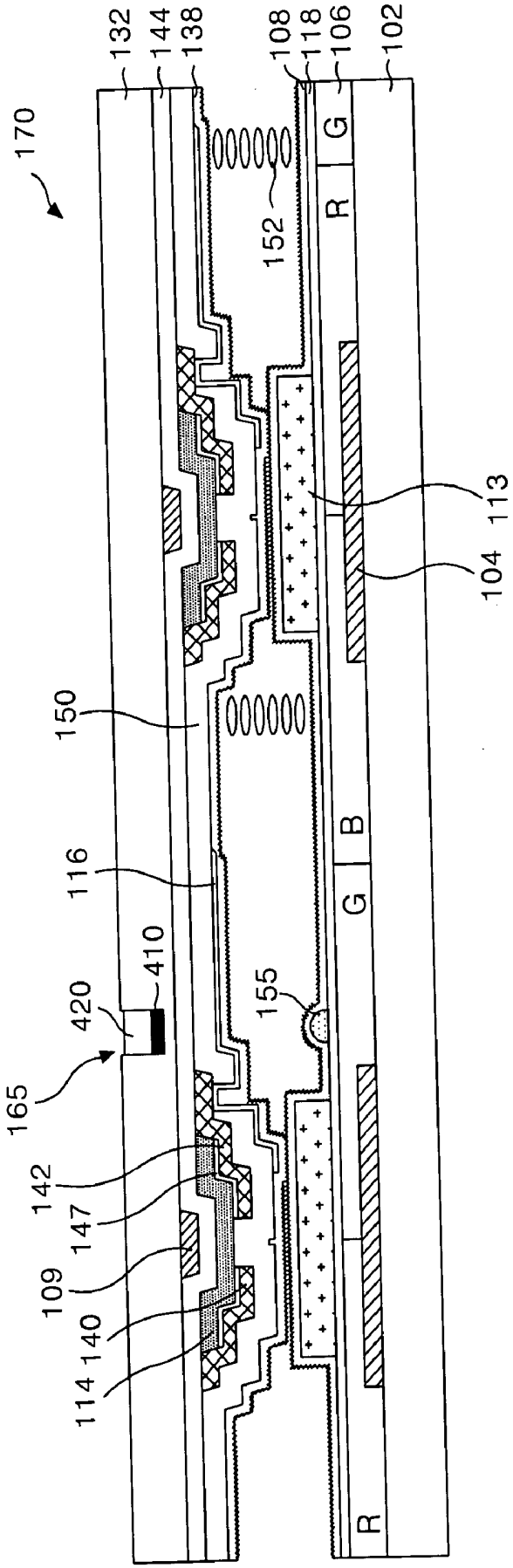
170
132
144
138
108
118
106
102
152
R
G
113
104
150
116
B
G
410
420
155
165
142
147
109
140
114
R

FIG.7A

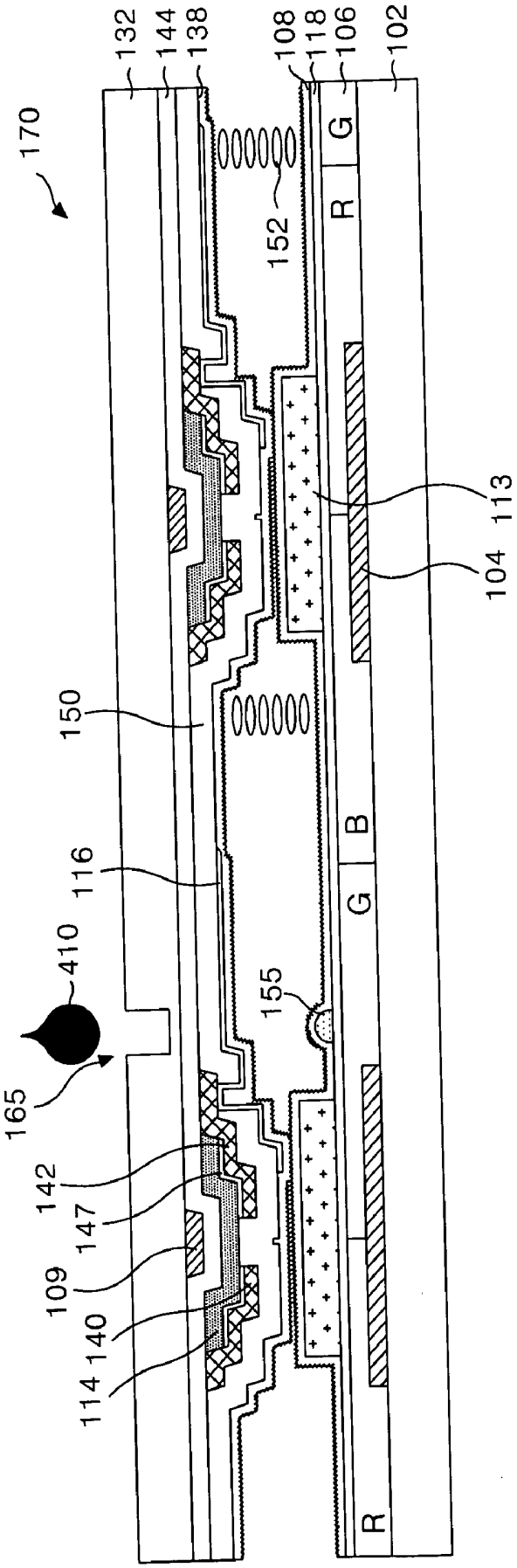
170
132
144
138
108
118
106
102
152
G
R
113
104
150
116
B
G
410
155
165
142
147
109
140
114
R

FIG. 7B

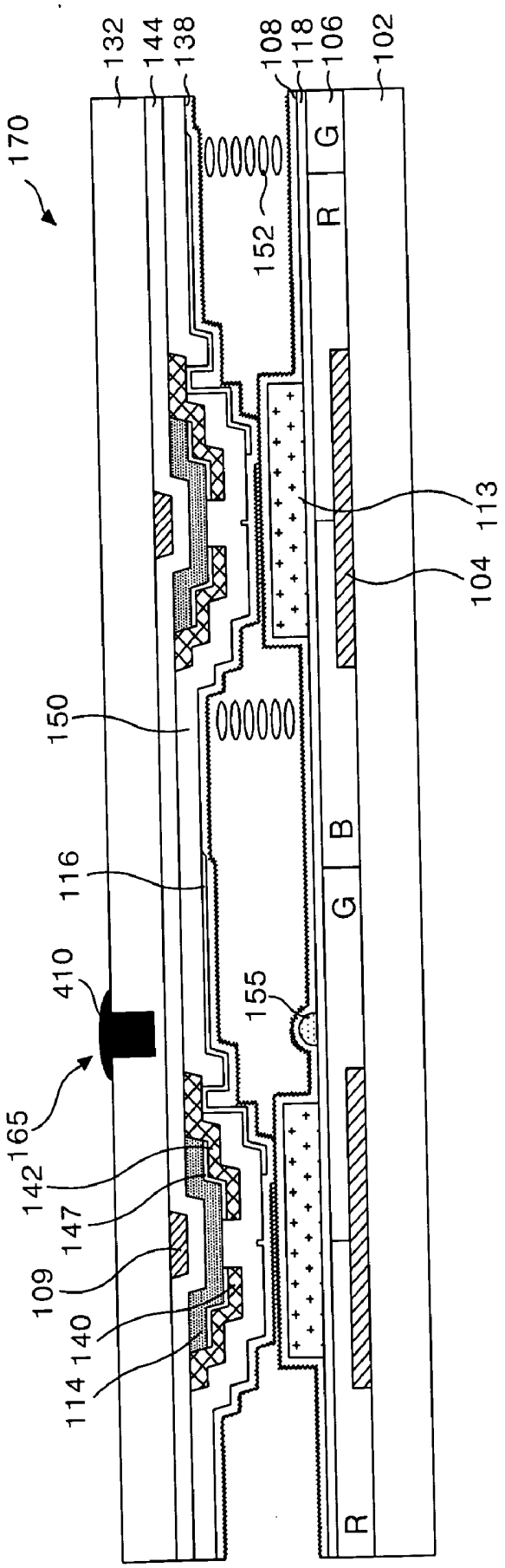
170
132
144
138
108
118
106
102
152
G
R
113
104
150
116
B
G
410
155
165
142
147
109
140
114
R

FIG. 7C

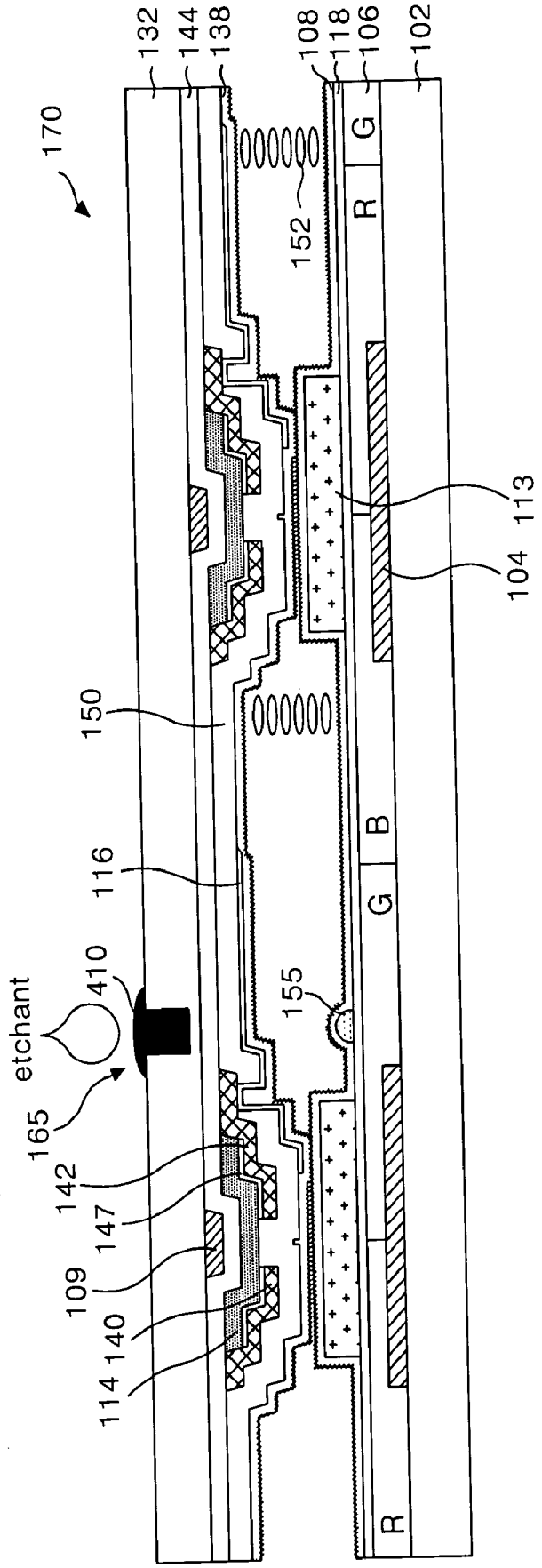
170
132
144
138
108
118
106
102
152
G
R
113
104
150
116
B
G
155
410
etchant
165
142
147
109
140
114
R

FIG. 7D

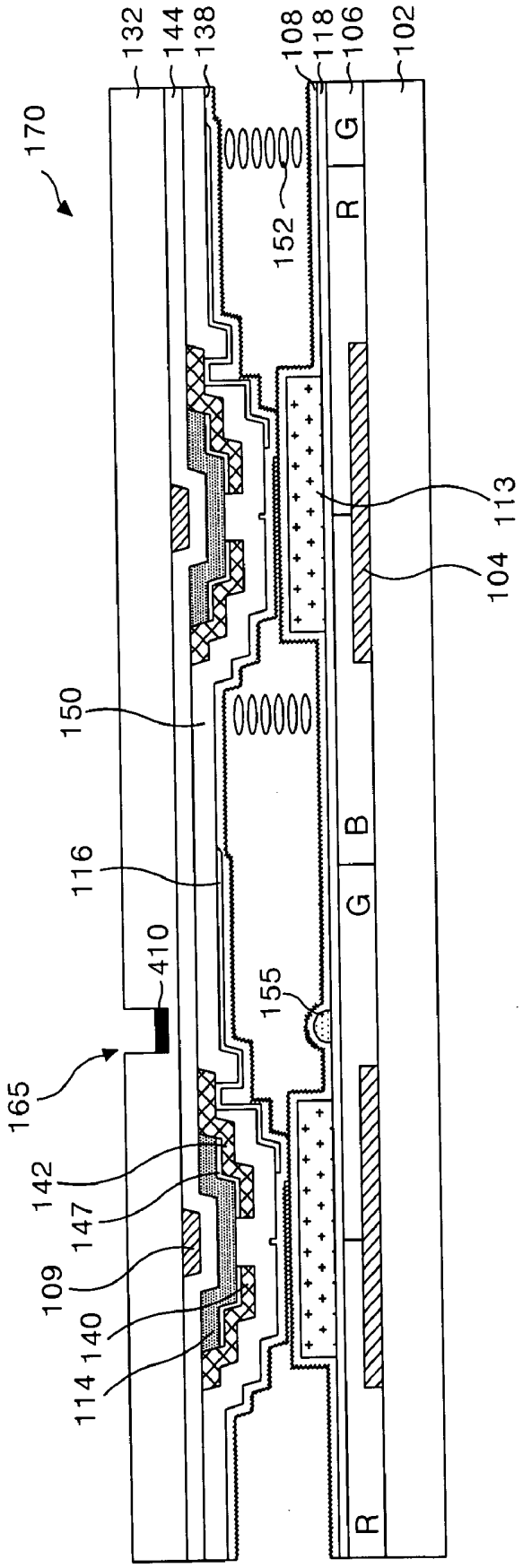
170
132
144
138
108
118
106
102
152
113
104
150
116
410
155
165
142
147
109
140
114
R
G
B
G
R

FIG. 8A

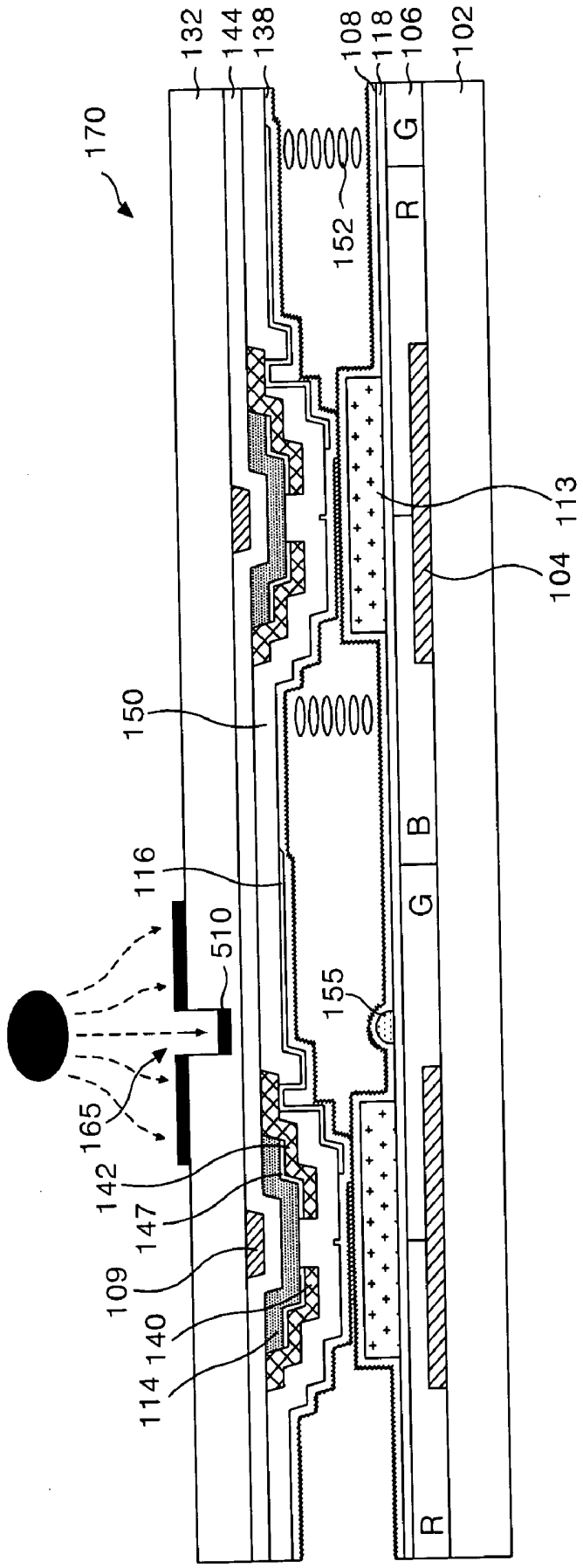
170
132
144
138
108
118
106
102
152
R
G
113
104
150
116
B
G
510
155
165
142
147
109
140
114
R

FIG.8B

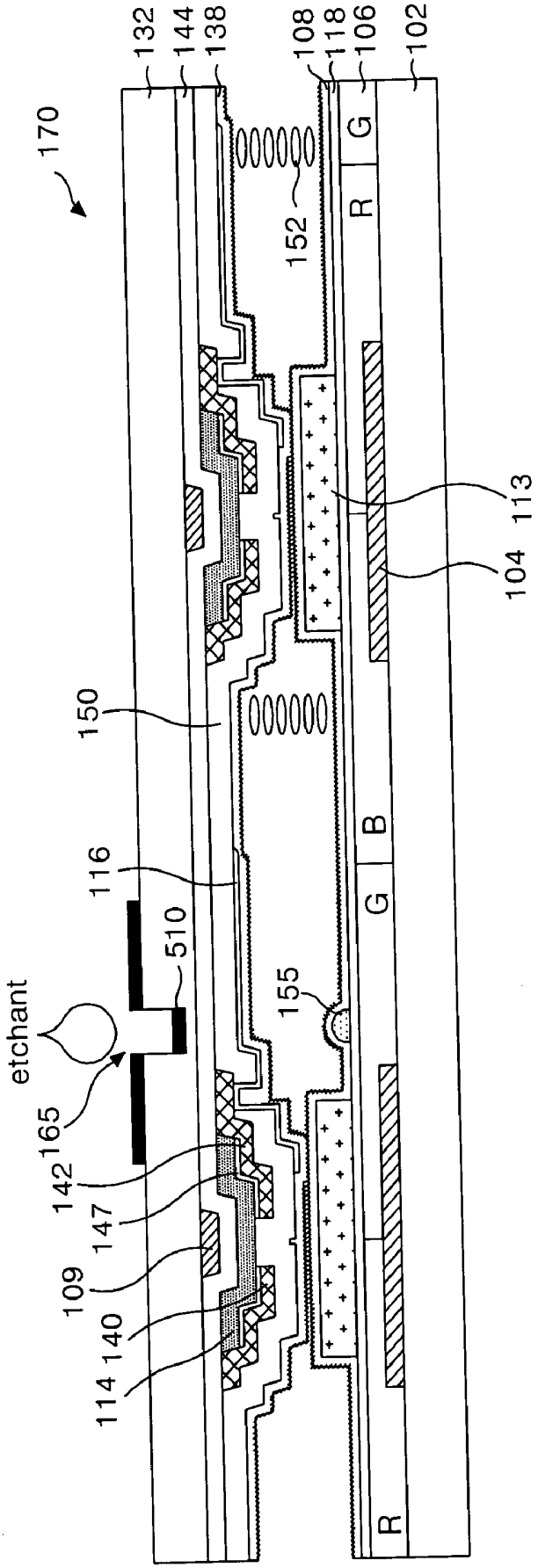
170
132
144
138
108
118
106
102
152
R
G
113
104
150
116
B
G
510
155
etchant
165
142
147
109
140
114
R

FIG.8C

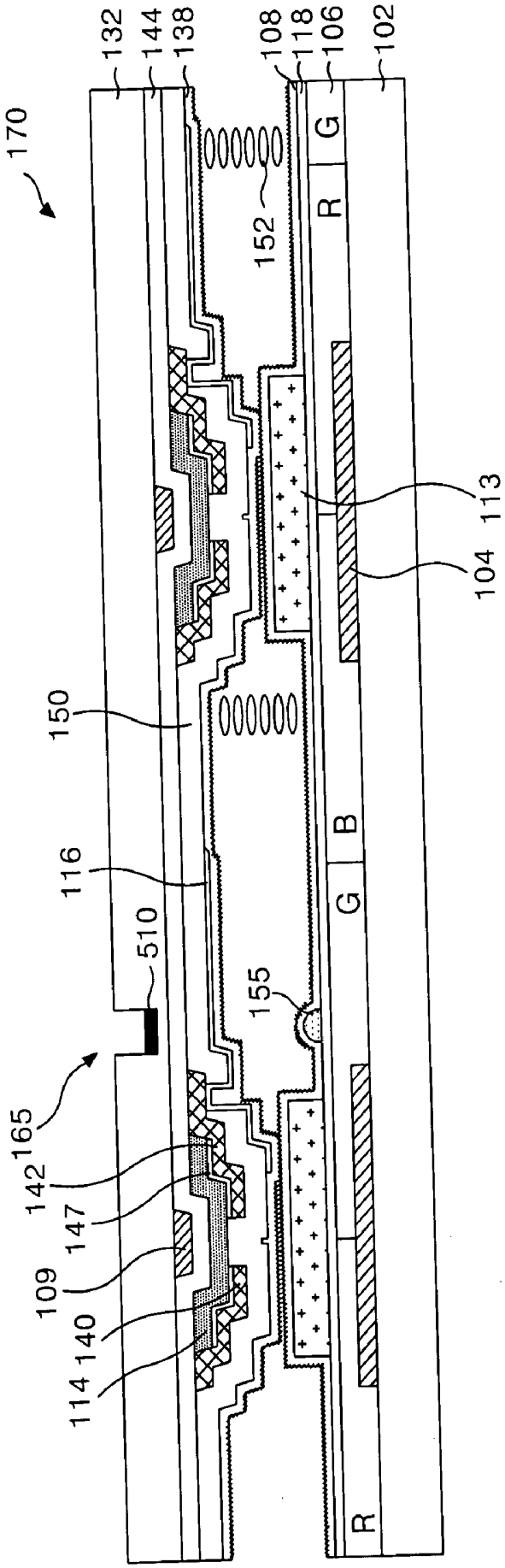
170
132
144
138
108
118
106
102
152
G
R
113
104
150
116
B
G
510
155
165
142
147
109
140
114
R

FIG.8D

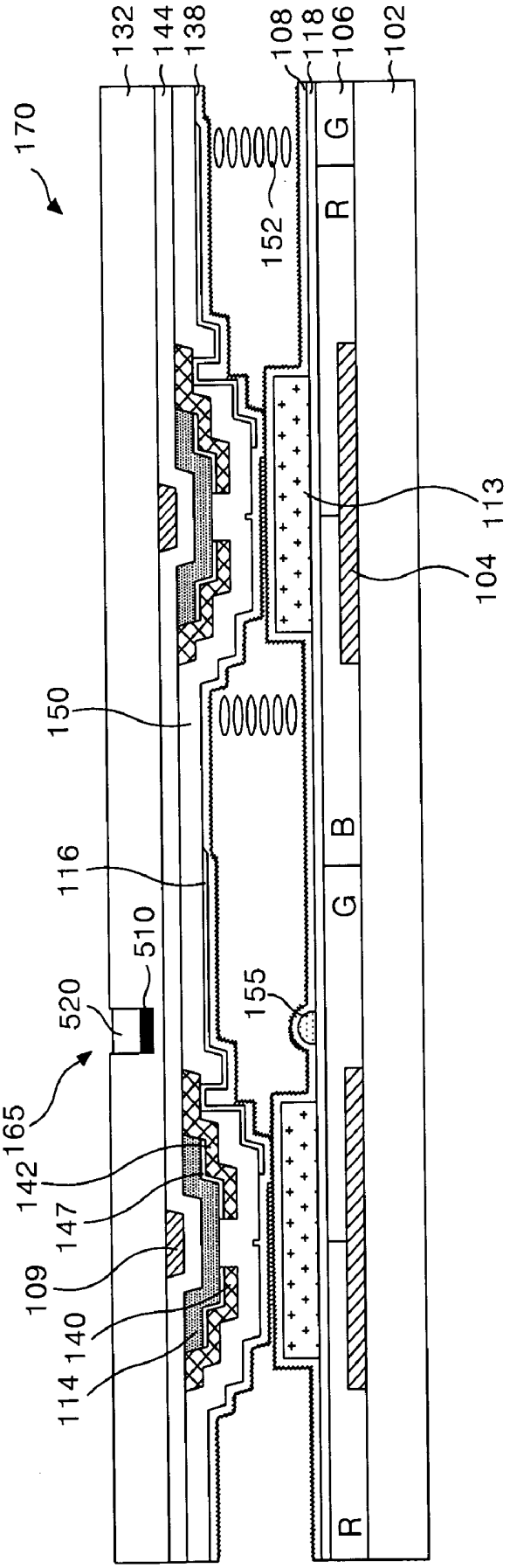
170
132
144
138
108
118
106
102
152
G
R
113
104
150
116
B
G
510
520
155
165
142
147
109
140
114
R

LIQUID CRYSTAL DISPLAY PANEL AND REPAIRING METHOD THEREOF

[0001] This application claims the benefit of Korean Patent Applications Nos. P2005-50615 filed in Korea on Jun. 13, 2005, and P2005-71948 filed in Korea on Aug. 5, 2005, each of which is hereby incorporated by reference by its entirety.

BACKGROUND

[0002] 1. Technical Field

[0003] The invention relates to a liquid crystal display panel and repairing method thereof, and more particularly, to a repairing system of a liquid crystal display panel capable of minimizing a defect ratio and improving a yield.

[0004] 2. Related Art

[0005] A liquid crystal display (LCD) device controls the light transmittance of a liquid crystal material in accordance with a video signal to display a picture. The liquid crystal display device includes a liquid crystal display panel in which liquid crystal cells are arranged in a matrix shape, and a drive circuit that drives the liquid crystal display panel.

[0006] The liquid crystal display device is divided into two types in accordance with the electric field direction driving a liquid crystal material. For a twisted nematic ("TN") mode, a vertical direction electric field is used and for an in-plan switch ISP mode, a horizontal direction electric field is used.

[0007] For the TN mode, the liquid crystal material is driven by a vertical electric field between a pixel electrode and a common electrode which are arranged to be opposite in an upper substrate. The TN mode has a large aperture ratio and a small viewing angle. For the IPS mode, the liquid crystal material is driven by a horizontal electric field between the pixel electrode and the common electrode which are arranged in parallel on a lower substrate. The IPS mode has a large viewing angle and a small aperture ratio.

[0008] **FIG. 1** is a sectional view illustrating a liquid crystal display panel **1** of TN mode of the related art. Referring to **FIG. 1**, the related art TN mode liquid crystal display panel **1** includes an upper array substrate **2**, a lower array substrate **32**, and a liquid crystal material **52** injected into an inner space between the upper array substrate **2** and the lower array substrate **32**. The upper array substrate **2** (or a color filter array substrate) includes a black matrix **4**, a color filter **6**, a common electrode **18**, and an upper alignment film **8** which are sequentially formed on an upper substrate **2**. The lower array substrate **32** includes a thin film transistor (hereinafter, referred to as "TFT"), a pixel electrode **16** and a lower alignment film **38** which are formed on the lower substrate **32**.

[0009] If the liquid crystal display panel **1** is driven in an IPS mode, it may have the common electrode **18** formed on the lower substrate **32**. An overcoat layer is formed on the color filter **6** of the upper substrate **2**. The overcoat layer compensates a step difference of the color filter **6**.

[0010] In the upper array substrate **2**, the black matrix **4** is formed on the upper substrate **2** and corresponds to an area of gate lines and data lines (not shown) and a TFT area of the lower array substrate **32**. The black matrix **4** prevents light leakage and absorbs an external light, thereby acting to increase contrast. A cell area is provided where a color filter **6** is to be formed. The color filter **6** is formed to extend to the black matrix **4** and the cell area is divided by the black matrix **4**. The color filter **6** is formed with R, G and B filters to realize R, G and B colors. A common voltage is supplied to the common electrode **18** to control the movement of the liquid crystal material **52**. A pattern spacer **13** acts to keep a cell gap between the upper array substrate **2** and the lower array substrate **32**.

[0011] In the lower array substrate **32**, the TFT includes a gate electrode **9** formed on the lower substrate **32** along with a gate line; semiconductor layers **14**, **47** overlapping the gate electrode **9** with a gate insulating film **44** disposed therebetween; and source/drain electrodes **40**, **42** formed together with a data line (not shown) with the semiconductor layers **14**, **47** disposed therebetween. The TFT supplies a pixel signal to a pixel electrode **16** from the data line in response to a scan signal from the gate line. The pixel electrode **16** is in contact with the drain electrode **42** of the TFT via a contact hole. A passivation film **50** is formed between the pixel electrode **16** and the drain electrode **42** and made from a transparent conductive material with high light transmittance. Upper and lower alignment films **8** and **38** are used to align the liquid crystal material **52** and formed by applying an alignment material such as polyimide and performing a rubbing process.

[0012] If a defect is generated at each thin film of the upper array substrate **2** and the lower array substrate **32** of the related art liquid crystal display panel **1**, a repair is performed by using a rework or laser. However, if a particle is soundly settled between the thin films of both the upper array substrate **2** and the lower array substrate **32**, the repair may be difficult with the rework or laser.

[0013] **FIG. 2** is a sectional view for explaining an alignment defect caused by particle in the air, and **FIG. 3** is a photo illustrating a bright point caused by the particle upon realizing a picture.

[0014] **FIG. 2** illustrates particle **55** that occurs during manufacturing process of a liquid crystal display panel **1**. In the chamber within which a designated thin film is formed or in case that it is moved to a separate chamber or a third location to form another thin film, the particle **55** may be soundly settled between the thin films, e.g., the common electrode **18** and the upper alignment film **8** as shown in **FIG. 2**. The alignment film **8** adjacent to the particle **55** may not be uniformly rubbed in a rubbing process, thereby generating a non-uniform alignment area A. Further, a portion of the color filter is separated by a defect on the process upon forming the color filter. Accordingly, a problem that the particle is intermixed is frequently generated.

[0015] The non-uniform alignment area A generates the light leakage in the liquid crystal display panel **1**, and such a light leakage intercepts a light transmittance of the liquid crystal material. As a result, a bright point appears in the liquid crystal display panel as shown in **FIG. 3**. A dark point is an area that appears dark in case of realizing a high gray, and a bright point is an area that appears bright by the light leakage in case of realizing a low gray. Human eyes are relatively more sensitive to the bright point than the dark point. Thus, a stricter standard applies to the bright point defect than the dark point defect in determining the quality

of the panel. A liquid crystal display panel having a bright point defect may be wasted or subject to a substantially reduced marketability. Accordingly, there is a need of a repair method that substantially minimizes a defect rate of a panel caused by a bright point.

SUMMARY

[0016] By way of example only, in one embodiment, a liquid crystal display panel includes a substrate, a hole disposed in the substrate and an opaque substance filling in the hole. The hole is configured to be located in an area corresponding to a bright point.

[0017] In other embodiment, a method for repairing a liquid crystal display panel having a substrate is provided. An area corresponding to a bright point is sensed and a hole is formed on the substrate. The hole is configured to be located in the area corresponding to the bright point. The hole is filled in with an opaque substance.

BRIEF DESCRIPTION OF THE DRAWINGS

[0018] These and other objects of the invention will be apparent from the following detailed description of the embodiments with reference to the accompanying drawings, in which:

[0019] **FIG. 1** is a sectional view illustrating a liquid crystal display panel of TN mode of the related art.

[0020] **FIG. 2** is a sectional view for explaining an alignment defect caused by particle in the air;

[0021] **FIG. 3** is a photo illustrating a bright point defect of **FIG. 2**.

[0022] **FIGS. 4A and 4B** are sectional views illustrating a liquid crystal display panel according to an embodiment;

[0023] **FIGS. 5A and 5B** are sectional views illustrating light irradiated to a micro hole from a backlight unit;

[0024] **FIG. 6A** to **6**e are sectional views illustrating a method of repairing the liquid crystal display panel of **FIG. 4A** according to a first embodiment;

[0025] **FIG. 7A** to **7**D are sectional views illustrating a method of repairing the liquid crystal display panel of **FIG. 4A** according to a second embodiment; and

[0026] **FIG. 8A** to **8**D are sectional views illustrating a method of repairing the liquid crystal display panel of **FIG. 4A** according to a third embodiment.

DETAILED DESCRIPTION OF THE PREFERRED EMBODIMENT

[0027] Reference will now be made in detail to the preferred embodiments, examples of which are illustrated in the accompanying drawings.

[0028] **FIGS. 4A and 4B** are sectional views illustrating a liquid crystal display panel according to one embodiment. **FIG. 4A** illustrates that a micro hole is formed in a lower substrate and **FIG. 4B** illustrates that a micro hole is formed in an upper substrate.

[0029] Referring to **FIGS. 4A and 4B**, a liquid crystal display panel **170** according to the embodiment includes an upper array substrate **102**, a lower array substrate **132** and a liquid crystal material **152**. The upper array substrate (or a color filter array substrate) **102** has a black matrix **104**, a color filter **106**, a common electrode **118**, a pattern spacer **113**, and an upper alignment film **108** which are sequentially formed on an upper substrate **102**. The lower array substrate (or a thin film transistor substrate) **132** has a thin film transistor (hereinafter, referred to as "TFT"), a pixel electrode **116** and a lower alignment film **138** which are formed on a lower substrate **132**. The liquid crystal material **152** is injected into an inner space between the upper array substrate **102** and the lower array substrate **103**.

[0030] In the upper array substrate **102**, the black matrix **104** is formed in an area of gate lines and data lines (not shown) and a TFT area of the lower array substrate **132**. It provides a cell area where a color filter **106** is to be formed. The black matrix **104** is formed of polyimide, in which a pigment of carbon system is mixed, to prevent light leakage and absorbs an external light, thereby acting to increase contrast. The color filter **106** is formed to extend to the black matrix **104** and the cell area divided by the black matrix **104**. The color filter **106** is formed with R, G and B filters to realize R, G and B colors. A common voltage is supplied to the common electrode **118** to control the movement of the liquid crystal material **152**. The pattern spacer **113** operates to keep a cell gap between the upper array substrate and the lower array substrate.

[0031] In the lower array substrate **132**, the TFT includes a gate electrode **109** formed along with a gate line; semiconductor layers **114**, **147** overlapping the gate electrode **109** with an interposed gate insulating film **144**; and source/drain electrodes **140**, **142** formed together with a data line (not shown) with the semiconductor layers **114**, **147** disposed therebetween. The TFT supplies a pixel signal to a pixel electrode **116** from the data line in response to a scan signal from the gate line.

[0032] The pixel electrode **116** is in contact with a drain electrode **142** of the TFT via a passivation film **150** disposed between the pixel electrode **116** and the drain electrode **142**. The pixel electrode **116** is formed of a transparent conductive material with high light transmittance. The upper and the lower alignment films **108** and **138** have the liquid crystal material **152** aligned and are formed by applying an alignment material such as polyimide and performing a rubbing process. If the liquid crystal display panel **170** is driven in an IPS mode, it may have the common electrode **118** formed on the lower substrate **132**. An overcoat layer (not shown) is formed on the color filter **106** of the upper substrate **102**. The overcoat layer compensates for a step difference of the color filter **106**.

[0033] A bright point may be generated at an area where an alignment defect of the liquid crystal display panel **170** is generated by a particle **155** intermixed in the liquid crystal display panel **170**. The liquid crystal display panel **170** provides a micro hole **165** formed in one of the upper substrate **102** and the lower substrate **132** corresponding to the area where the bright point is generated. An opaque substance **260** may fill in some part of the micro hole **165**. A transparent substance **270** may fill in other part of the micro hole **165** after the opaque substance fills in the micro hole **165**. In **FIG. 4B**, the micro hole **165** is formed in the upper substrate **102** and filled in with the opaque substance **260** and the transparent substance **270**.

[0034] **FIG. 5A** illustrates that the opaque substance **260** filled in the micro hole **165** intercepts light irradiated to the liquid crystal display panel **170** of **FIG. 4A** from a backlight unit **120**. The backlight unit **120** is arranged on a rear surface of the lower array substrate **132** in **FIG. 5A**. Due to the interception of light, it is possible to darken the area where the alignment defect of the liquid crystal display panel **170** is generated, i.e., the area where the bright point is generated.

[0035] In **FIG. 5A**, the opaque substance **260** fills in only some part of the micro hole **165**. Referring to **FIG. 5B**, the opaque substance **260** fully fills in the micro hole **165**. Light irradiated to the area where the bright point is generated from the backlight unit **120** is intercepted. Further, the light from the backlight unit **120**, which is irradiated to cells adjacent to the micro hole **165**, may be intercepted by the opaque substance **260**. Accordingly, the aperture ratio of the cells adjacent to the micro hole **165** may become reduced. It is desirable that the opaque substance **260** fills in only some part of the micro hole **165** rather than the entire micro hole **165**.

[0036] In **FIGS. 6A-6E**, a method of repairing the liquid crystal display panel of **FIG. 4A** according to the first embodiment is described. In **FIGS. 6A-6E**, the micro hole **165** is formed in the lower substrate **132**. Accordingly, the lower substrate **132** is disposed in an upper position with respect to the upper substrate **102** for convenience of explanation in **FIGS. 6A-6E**. In other embodiment, the micro hole **165** may be formed in the upper substrate **102** or both the upper and lower substrates **102** and **132** upon needs.

[0037] In **FIG. 6A**, a bright point is generated in the liquid crystal display panel **170** by the particle **155** intermixed between the common electrode **118** and the upper alignment film **108**. Accordingly, the micro hole **165** is formed in the lower substrate **132** corresponding to the area where the bright point is generated.

[0038] In this embodiment, the micro hole **165** is formed by using a micro drill. The micro hole **165** may be formed in a range of 20 μm to 500 μm in accordance with a size of the liquid crystal display panel **170** and a degree of a light leakage caused by the intermixed particle **155**. An end drill capable of forming a circle type micro hole and a straight type micro hole in accordance with a shape of the intermixed particle **155** may be used with the micro drill. Alternatively, or additionally, a micro milling may be used as a device for forming the micro hole **165**. The micro milling may form an accurate and various shapes of micro hole **165**.

[0039] In other embodiment, a laser may be used to form the micro hole **165**. In **FIG. 6B**, a laser **161** is used to form the micro hole **165**. The laser **161** may include a ND YAG (Neodymium: Yttrium Aluminum Garnet) laser having a wavelength of 266 nm. Various other lasers having a wavelength of 50~300 nm are possible.

[0040] In **FIG. 6C**, a colored pigment **410** such as a black or gray pigment is dropped by using an ink jet in the micro hole **165** formed in the lower substrate **132**. The micro hole **165** is filled in with the colored pigment **410**. The colored pigment **410** may include materials used for the color filter **106** or materials realizing color identical to the color filter **106**. The colored pigment **410** is dropped to the extent that it fills in some part of the micro hole **165**, as shown in **FIG. 6C**.

[0041] In **FIG. 6D**, a transparent pigment **420** is dropped in the micro hole **165** after the colored pigment **410** is dropped. The transparent pigment **420** fills in the remaining part of the micro hole as shown in **FIG. 6E**.

[0042] As described above, when the bright point is generated in the liquid crystal display panel **170**, the micro hole **165** is formed by the micro drill **160**, the micro milling or the laser in the lower substrate **132**. The micro hole **165** is generated in the area corresponding to the bright point of the liquid crystal display panel **170**. The colored pigment **410** fills in the formed micro hole **165** to darken the bright point such that light from the backlight unit **120** (**FIGS. 5A and 5B**) may not pass through the liquid crystal display panel **170**. As a result, a generation of a bright point may be reduced and a defect ratio may be minimized. Accordingly, a yield of the liquid crystal display panel **170** may improve.

[0043] **FIGS. 7A** to 7D illustrate a method of repairing the liquid crystal display panel **170** of **FIG. 4A** according to a second embodiment. In **FIGS. 7A** to 7D, the lower substrate **132** is shown at the upper position with respect to the upper substrate **102** for convenience of description only. In **FIG. 7A**, the colored pigment **410** such as a black or a gray pigment is dropped in the micro hole **165**.

[0044] In **FIG. 7B**, the colored pigment **410** fully fills in the micro hole **165** to the extent that it slightly covers a surface of the lower array substrate **132**. In **FIG. 7C**, an etchant is applied to remove the colored pigment **410** from an upper part of the micro hole **165**. As a result, the colored pigment **410** remains only in some part of the micro hole **165**, which is shown as a lower part of the micro hole **165** in **FIG. 7D**. After the colored pigment **410** is partially removed from the micro hole **165**, the transparent pigment **420** may fill in the remaining part of the micro hole **165**, as previously shown in **FIGS. 6C and 6D**.

[0045] **FIGS. 8A** to 8D illustrate a method of repairing the liquid crystal display panel **170** of **FIG. 4A** according to a third embodiment. In **FIGS. 8A** to 8D, the lower substrate **132** is illustrated at the upper position for convenience of description. In **FIG. 8A**, a colored electrode material **510** is deposited in the micro hole **165** on the lower substrate **132**. The colored electrode material **510** is also deposited on the surface of the lower substrate **132**, as shown in **FIG. 8A**. The colored electrode material **510** may include a black-colored electrode material such as chrome (Cr) or molybdenum (Mo) by using a deposition method.

[0046] In **FIG. 8B**, an etchant may be used to remove some of the colored electrode material **510** applied to the lower substrate **132**. The colored electrode material **510** remains in some part of the micro hole **165** as a result of etching as shown in **FIG. 8C**. Because the micro hole **165** formed on the lower substrate **132** does not perfectly penetrate the lower substrate **132**, the etchant may not reach the colored electrode material **510** filled in the micro hole **165** and it may not remove the colored electrode material **510** shown in **FIG. 8C** with ease as. On the other hand, the colored electrode material **510** deposited on the surface of the lower substrate **132** is easily removed by the etchant. After the etching, a transparent pigment **520** may fill in the remaining part of the micro hole **165**, as shown in **FIG. 8D**.

[0047] In this embodiment, the colored electrode material **510** is applied by using the deposition method such as a

vacuum deposition. The vacuum deposition may be used with the colored pigment as previously described.

[0048] The method, as described above in connection with the first, second and third embodiments, may be in use with various types of a liquid crystal display panel such as a liquid crystal display panel of electrical controlled birefringence (ECB), vertical alignment (VA) mode, IPS mode and TN mode.

[0049] As described above, when the bright point is generated in the liquid crystal display panel, the micro hole is formed by the micro drill, the micro milling or the laser in the lower substrate, the upper substrate or both substrates. The micro hole is generated in the area corresponding to the bright point of the liquid crystal display panel. The colored pigment or the colored electrode material fills in the formed micro hole to darken the bright point such that light from the backlight unit may not pass through the liquid crystal display panel. As a result, a generation of the bright point may be substantially reduced and a defect ratio may be minimized. Accordingly, the liquid crystal display panel may be repaired and the marketability of the liquid crystal display panel may be preserved. Accordingly, a yield of the liquid crystal display panel may improve.

[0050] Although the invention has been explained by the embodiments shown in the drawings described above, it should be understood to the ordinary skilled person in the art that the invention is not limited to the embodiments, but rather that various changes or modifications thereof are possible without departing from the spirit of the invention. Accordingly, the scope of the invention shall be determined only by the appended claims and their equivalents.

What is claimed is:

1. A liquid crystal display panel, comprising:

a substrate;

a hole disposed in the substrate, the hole configured to be located in an area corresponding to a bright point; and

an opaque substance filling in the hole.

2. The liquid crystal display panel according to claim 1, wherein the opaque substance partially fills in a lower part of the hole.

3. The liquid crystal display panel according to claim 2, further comprising a transparent substance filling in an upper part of the hole.

4. The liquid crystal display panel according to claim 1, wherein the substrate comprises an upper substrate and a lower substrate and a liquid crystal is disposed between the upper substrate and the lower substrate.

5. The liquid crystal display panel according to claim 4, further comprising a black matrix and a color filter on the upper substrate.

6. The liquid crystal display panel according to claim 1, wherein the opaque substance includes a colored pigment.

7. The liquid crystal display penel according to claim 6, wherein the colored pigment includes a substance realizing the same color as the color filter.

8. The liquid crystal display panel according to claim 6, wherein the colored pigment includes the same substance as the color filter.

9. The liquid crystal display panel according to claim 6, wherein the colored pigment comprises a substance realizing one of black color and gray color.

10. The liquid crystal display panel according to claim 5, wherein the opaque substance includes a colored metal substance.

11. The liquid crystal display panel according to claim 10, wherein the colored metal substance is the same substance as the black matrix.

12. The liquid crystal display panel according to claim 1, wherein the hole has a diameter of 20 μm to 500 μm.

13. A method for repairing a liquid crystal display panel having a substrate, comprising:

sensing an area corresponding to a bright point;

forming a hole in the substrate, the hole configured to be located in the area corresponding to the bright point; and

filling in the hole with an opaque substance.

14. The method according to claim 13, wherein forming the hole comprises forming the hole with at least one of a micro drill, a micro milling, or a laser.

15. The method according to claim 14, wherein forming the hole comprises supplying a light having a wavelength of about 50 nm to 300 nm with the laser.

16. The method according to claim 13, wherein filling in the hole comprises filling in a lower part of the hole with the opaque substance.

17. The method according to claim 16, wherein filling in the lower part of the hole comprises:

filling in an entire hole with the opaque substance; and

partially removing the opaque substance with an etchant.

18. The method according to claim 16, further comprising filling in an upper part of the hole with a transparent substance.

19. The method according to claim 13, wherein filling in the hole comprises forming the opaque substance with the same substance as one of a black matrix and a color filter.

20. The method according to claim 19, wherein filling in the hole comprises forming the opaque substance with a substance realizing the same color as the color filter.

21. The method according to claim 13, wherein filling in the hole comprises forming the opaque substance with one of a colored pigment and a colored metal substance.

22. The method according to claim 21, wherein forming the opaque substance comprises performing one of a vacuum deposition, a spraying process and a sputtering.

* * * * *

专利名称(译)	液晶显示面板及其修复方法		
公开(公告)号	US20060279681A1	公开(公告)日	2006-12-14
申请号	US11/205983	申请日	2005-08-17
[标]申请(专利权)人(译)	乐金显示有限公司		
申请(专利权)人(译)	LG飞利浦LCD CO. , LTD.		
当前申请(专利权)人(译)	LG DISPLAY CO. , LTD.		
[标]发明人	KWON OH NAM NAM SEUNG HEE		
发明人	KWON, OH NAM NAM, SEUNG HEE		
IPC分类号	G02F1/1333 G02F1/13		
CPC分类号	G02F1/1309		
优先权	1020050071948 2005-08-05 KR 1020050050615 2005-06-13 KR		
其他公开文献	US7612861		
外部链接	Espacenet USPTO		

摘要(译)
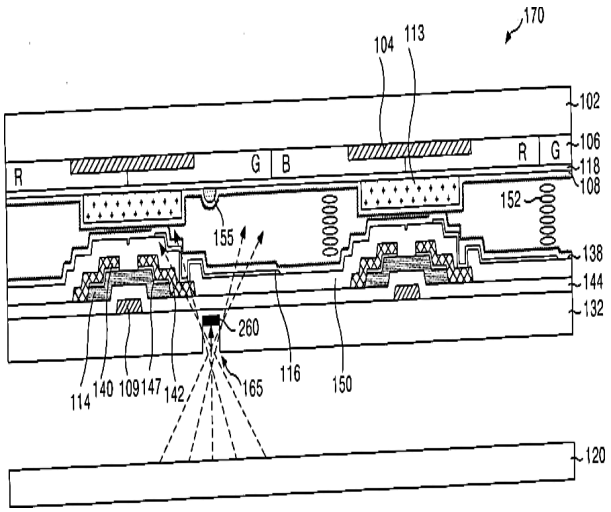
液晶显示器通道包括基板，设置在基板中的孔，以及填充在孔中的不透明物质。孔被配置为位于与亮点对应的区域中。液晶显示器通孔可以使缺陷率最小化并通过使亮点变暗来提高产量。