US 20030038904A1

(19) United States

(12) Patent Application Publication

(10) Pub. No.: US 2003/0038904 A1

(43) Pub. Date: Feb. 27, 2003

Kaneko et al.

(54) LIQUID CRYSTAL PANEL, LIQUID CRYSTAL DEVICE, AND ELECTRONIC APPARATUS

(76) Inventors: **Hideki Kaneko**, Shiojiri-shi (JP); **Chihiro Tanaka**, Matsumoto-shi (JP); **Tadashi Tsuyuki**, Nagano-ken (JP)

Correspondence Address:
HARNESS, DICKEY & PIERCE, P.L.C.
P.O. BOX 828
BLOOMFIELD HILLS, MI 48303 (US)

(21) Appl. No.: 10/215,269

(22) Filed: Aug. 8, 2002

(30) Foreign Application Priority Data

Aug. 9, 2001 (JP) 2001-243027

Publication Classification

(51) Int. Cl.[7] G02F 1/1345

(52) U.S. Cl. 349/110

(57) ABSTRACT

A liquid crystal panel includes a pair of substrates **2***a* and **2***b* individually provided with electrodes **14***a* and **14***b*, a sealing material **3** with which the substrates **2***a* and **2***b* are attached to each other, a first terminal installed on one substrate **2***a*, a second terminal which is installed on the other substrate **2***b* and which is connected to the electrode **14***b* on the substrate **2***b*, a conducting material **21** for connecting the first terminal and the second terminal, a wiring **19***b* which is installed on the substrate **2***a* and which is connected to the first terminal, and a light-shielding film **23** installed in at least a part of a region, which corresponds to the wiring **19***b*, on the other substrate **2***b*.

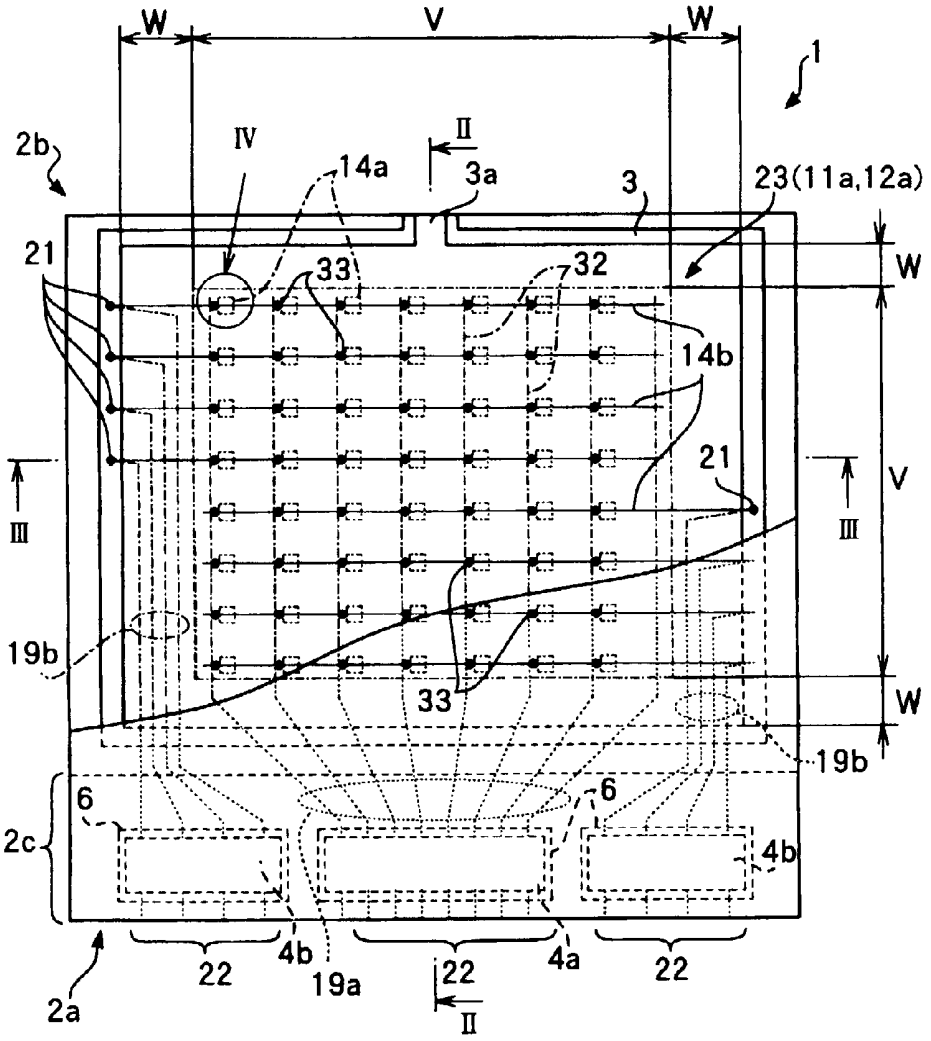

FIG. 1

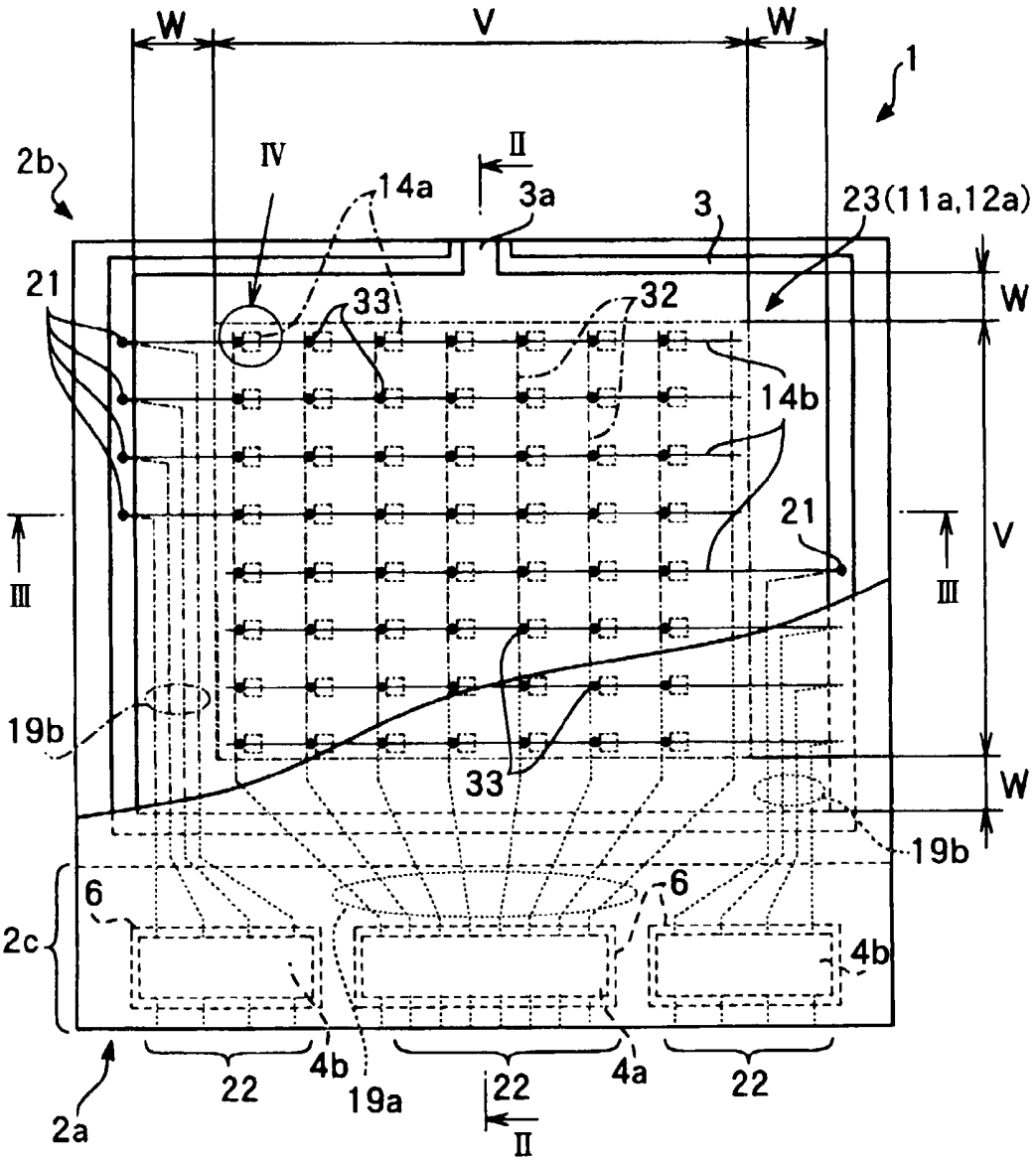
W
V
W
1
2b
IV
II
14a
3a
3
23(11a,12a)
21
33
32
W
14b
21
V
III
III
19b
33
W
19b
6
6
2c
4b
22
4b
19a
22
4a
22
2a
II

FIG. 2

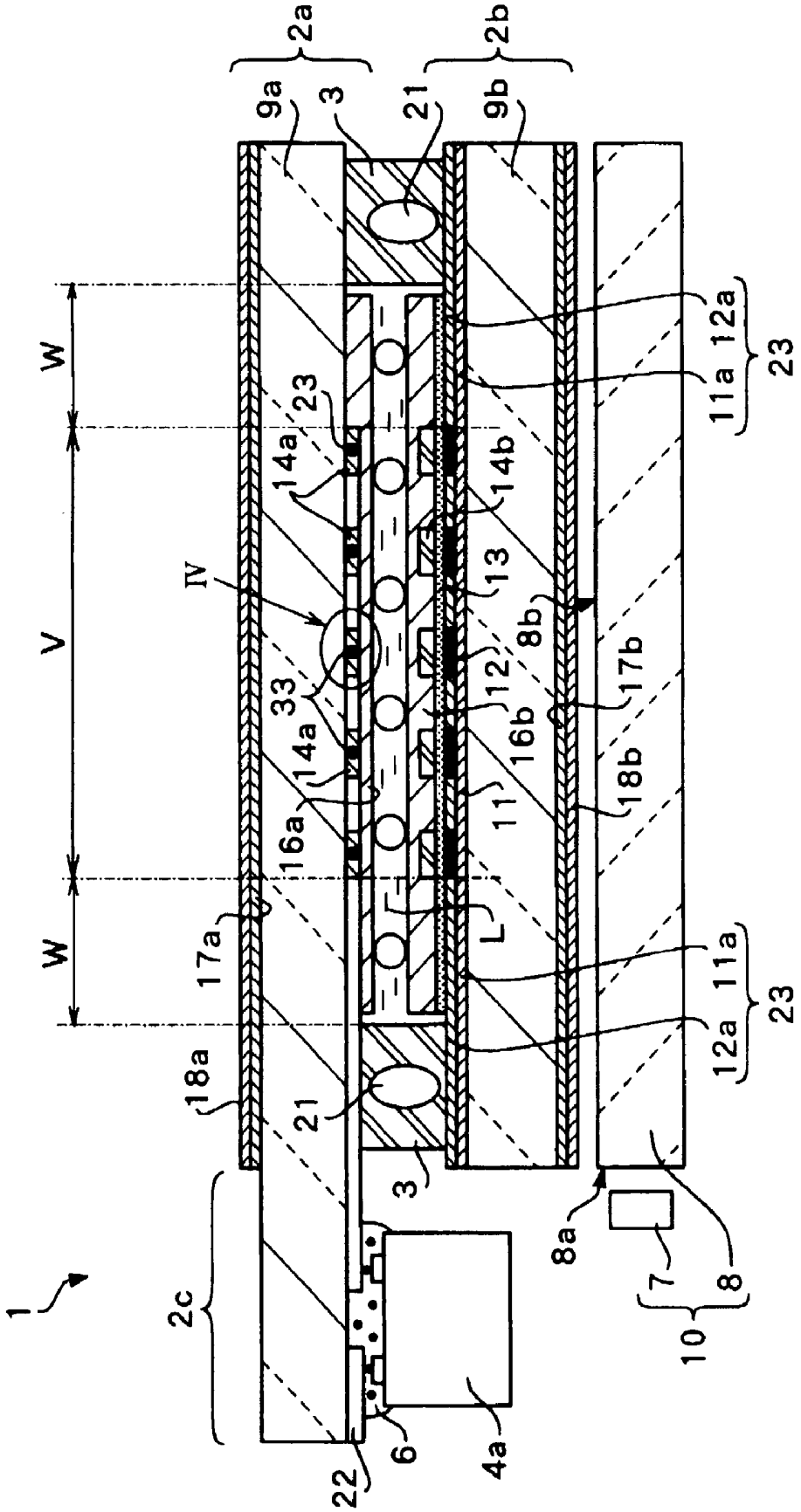
2a
2b
9a
3
21
9b
W
V
W
IV
23
14a
14b
13
8b
12
33
14a
16b
17b
18b
11
16a
L
17a
18a
21
3
2c
1
22
6
4a
8a
7
8
10
11a
12a
23
11a
12a
23

FIG. 3

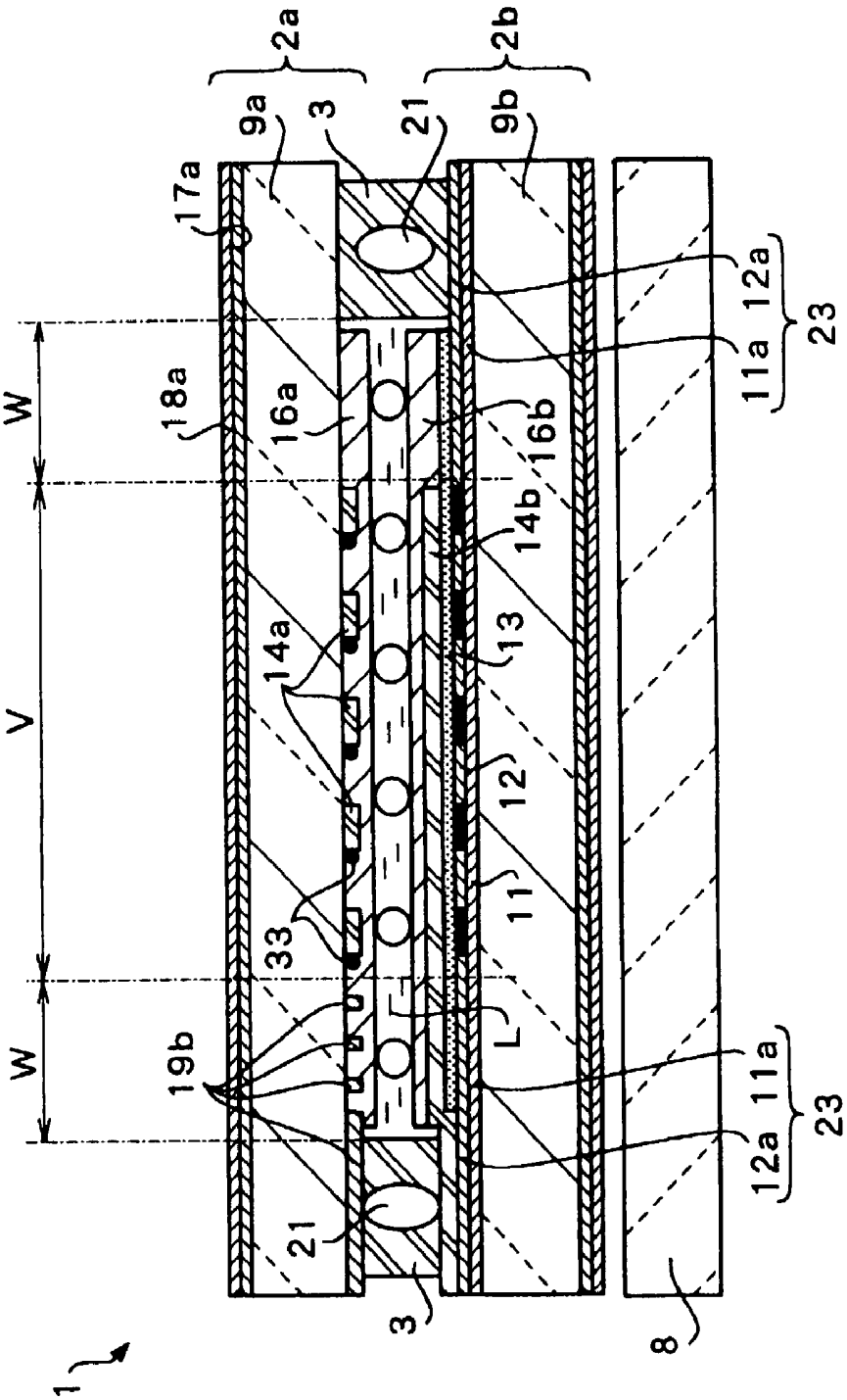
2a
2b
9a
3
21
9b
17a
12a
23
11a
W
18a
16a
16b
14b
V
14a
13
12
11
33
L
W
19b
11a
23
12a
21
3
8
1

FIG. 4

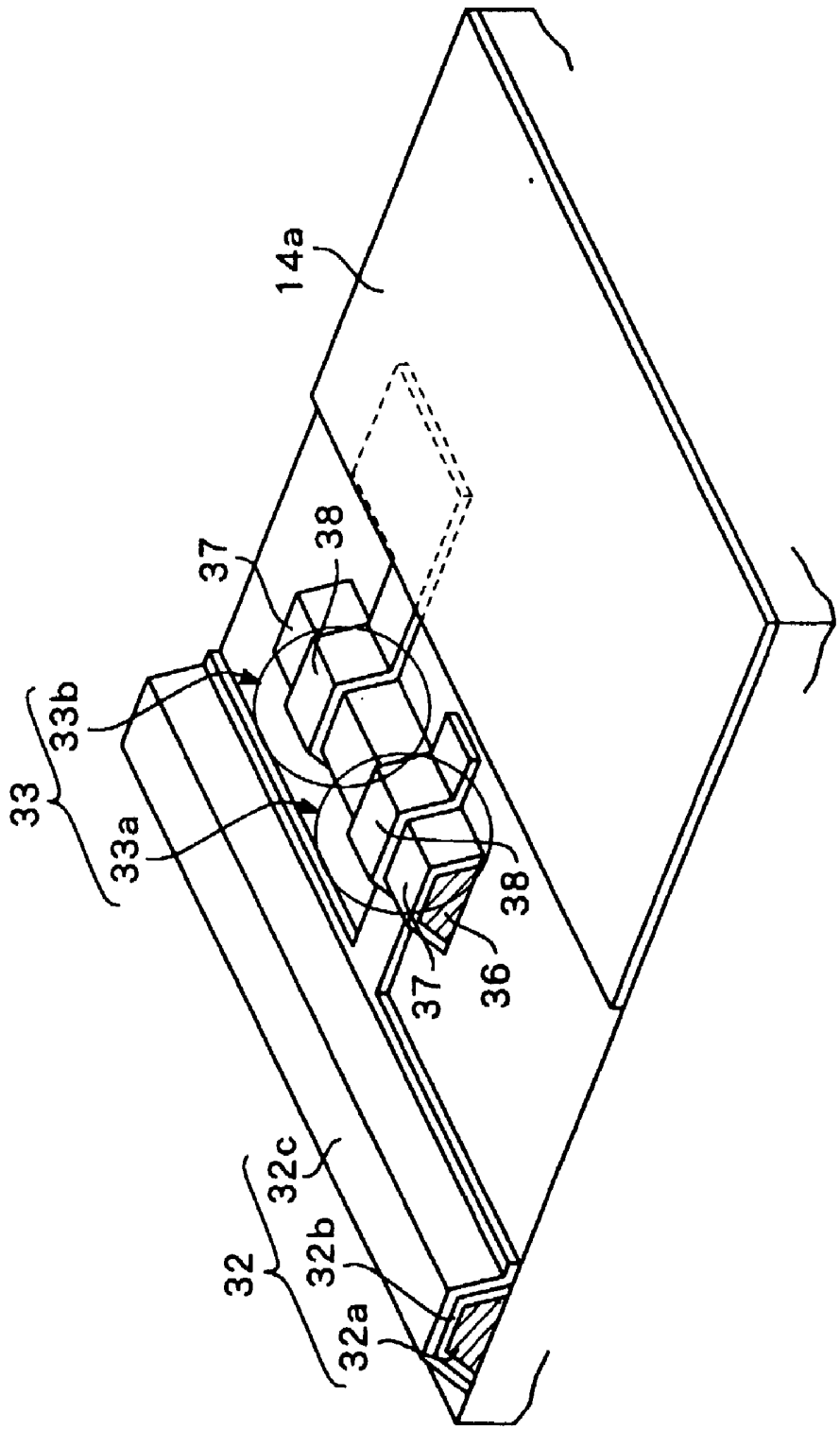

FIG. 5

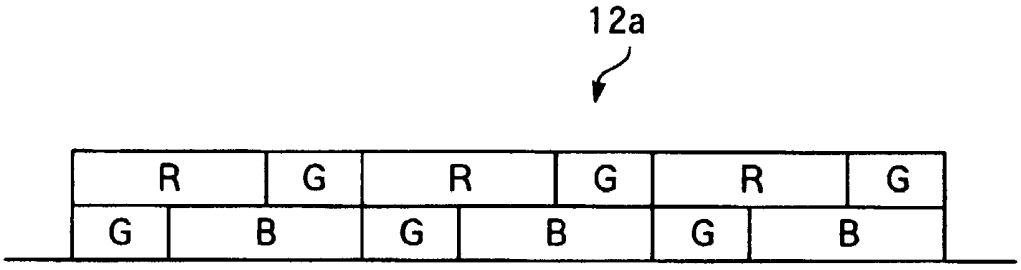

FIG. 6

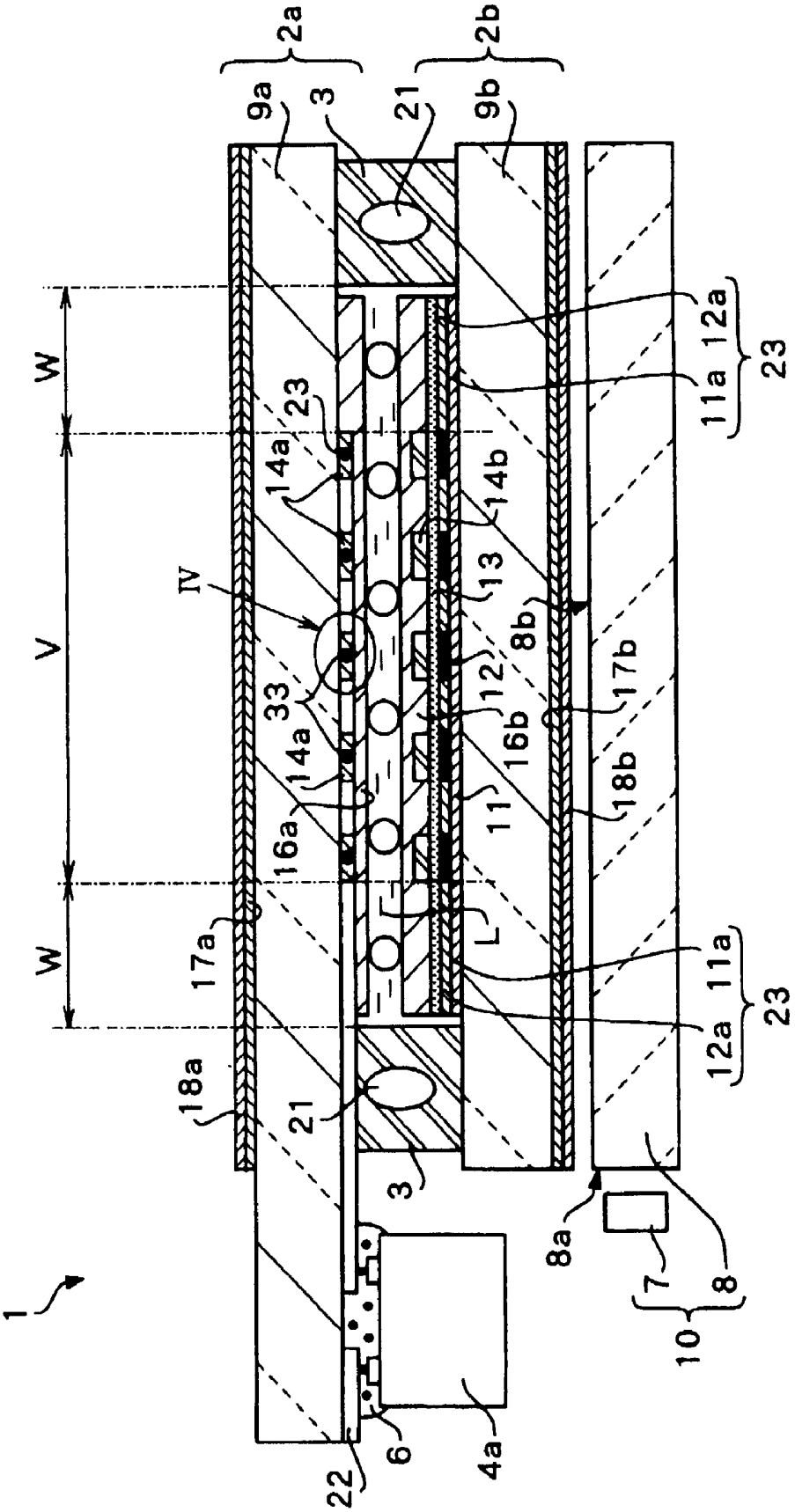
2a
2b
9a
3
21
9b
W
V
W
IV
23
14a
14b
13
8b
12
33
14a
16b
11
16a
17a
L
18a
21
3
12a
11a
23
12a
11a
23
17b
18b
8a
7
8
10
1
22
6
4a

FIG. 7

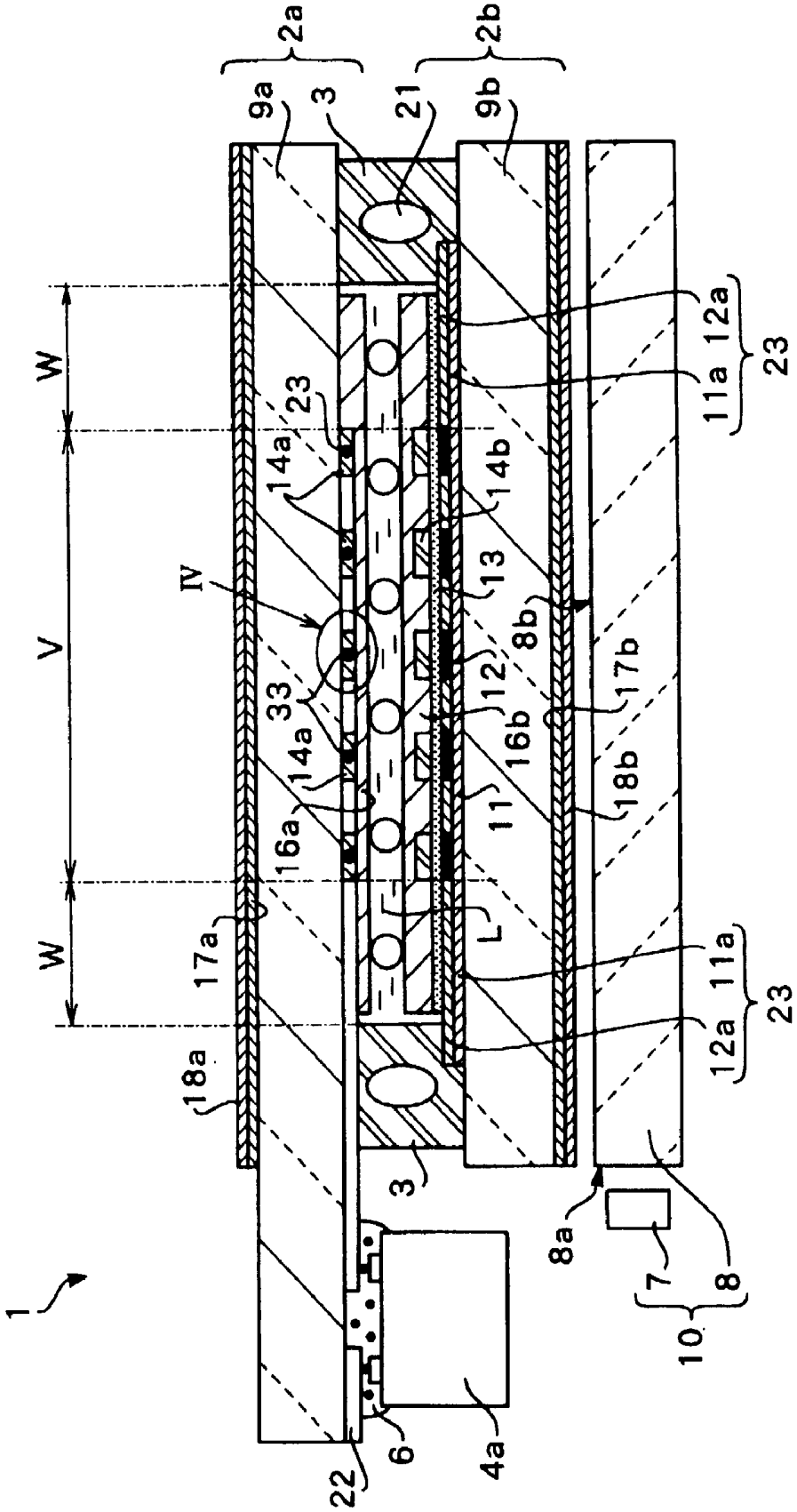
2a
2b
9a
3
21
9b
W
V
W
IV
23
14a
14b
13
8b
12
17b
33
14a
16b
18b
11
16a
L
17a
18a
12a
11a
23
11a
12a
23
3
8a
7
8
10
1
22
6
4a

FIG. 8

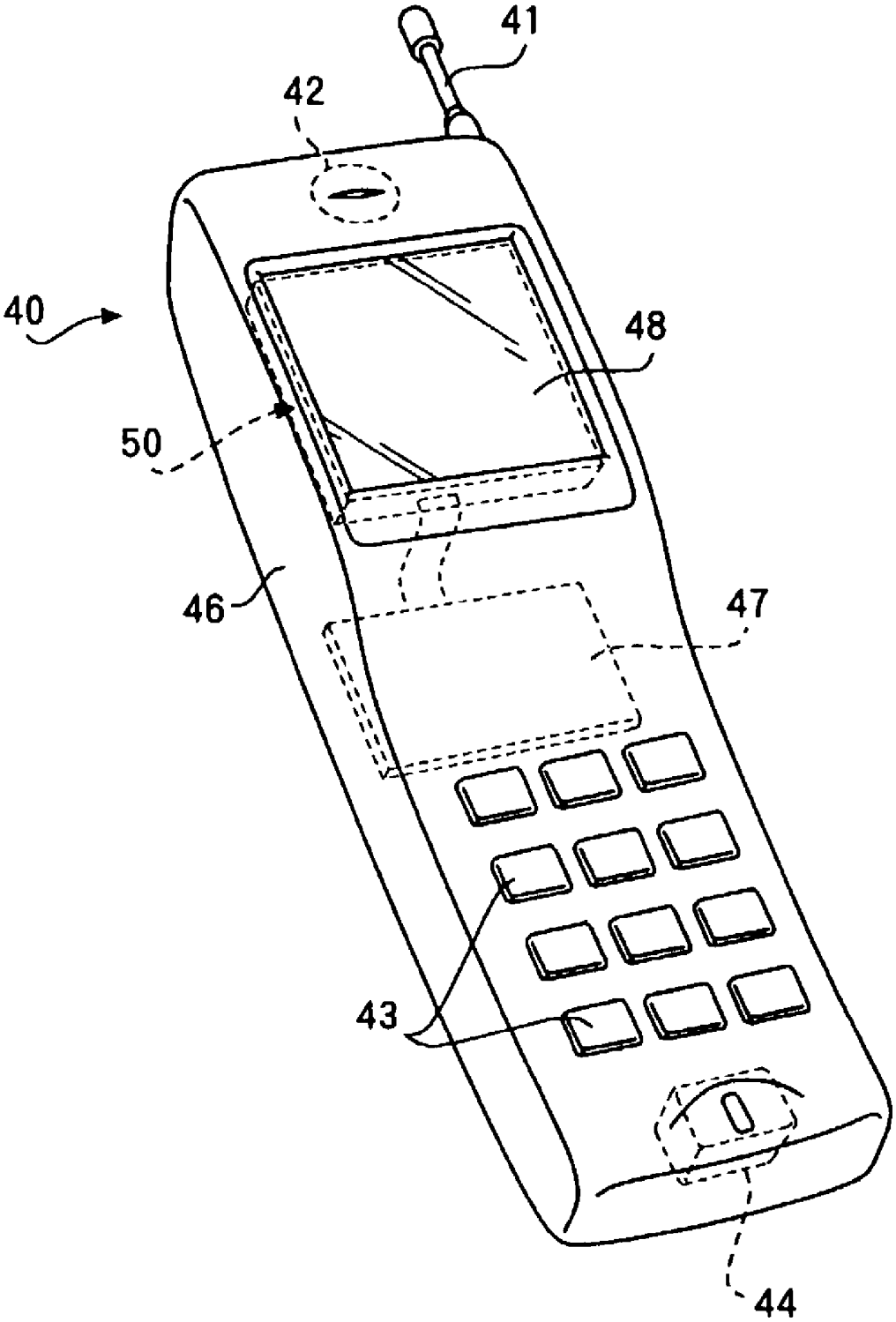

FIG. 9

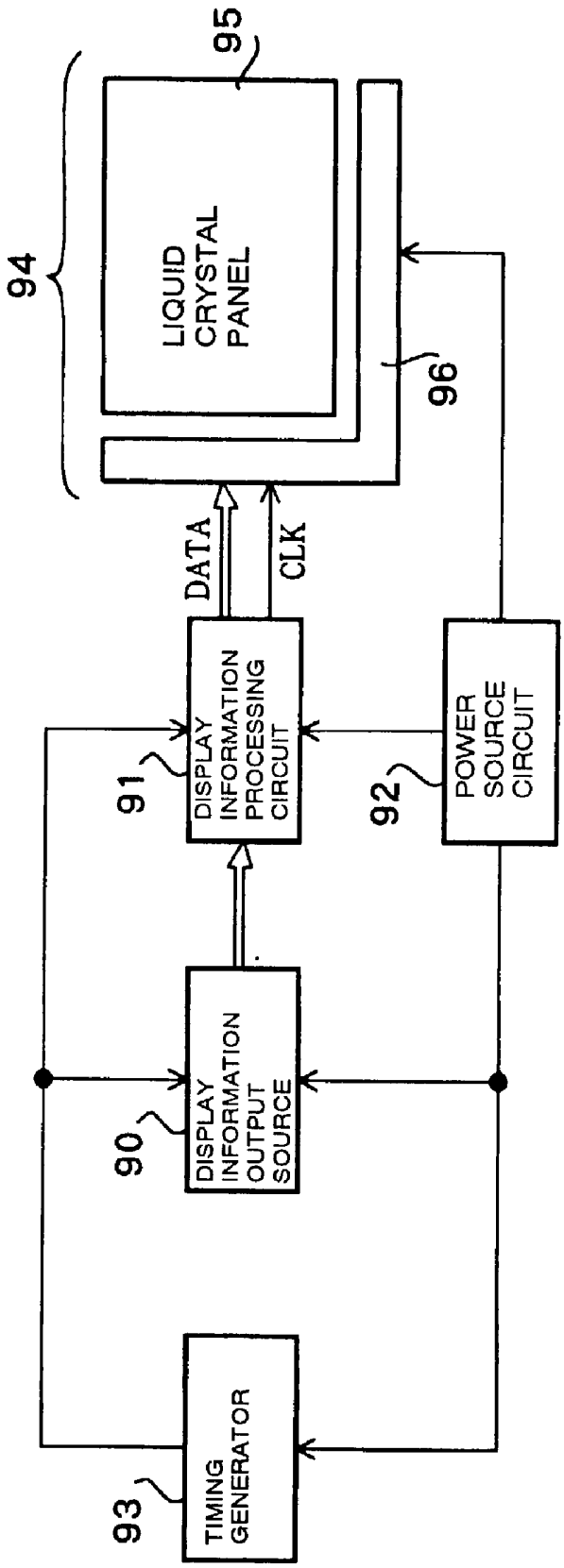
94
95
LIQUID CRYSTAL PANEL
96
DATA
CLK
91
DISPLAY INFORMATION PROCESSING CIRCUIT
92
POWER SOURCE CIRCUIT
90
DISPLAY INFORMATION OUTPUT SOURCE
93
TIMING GENERATOR

FIG. 10

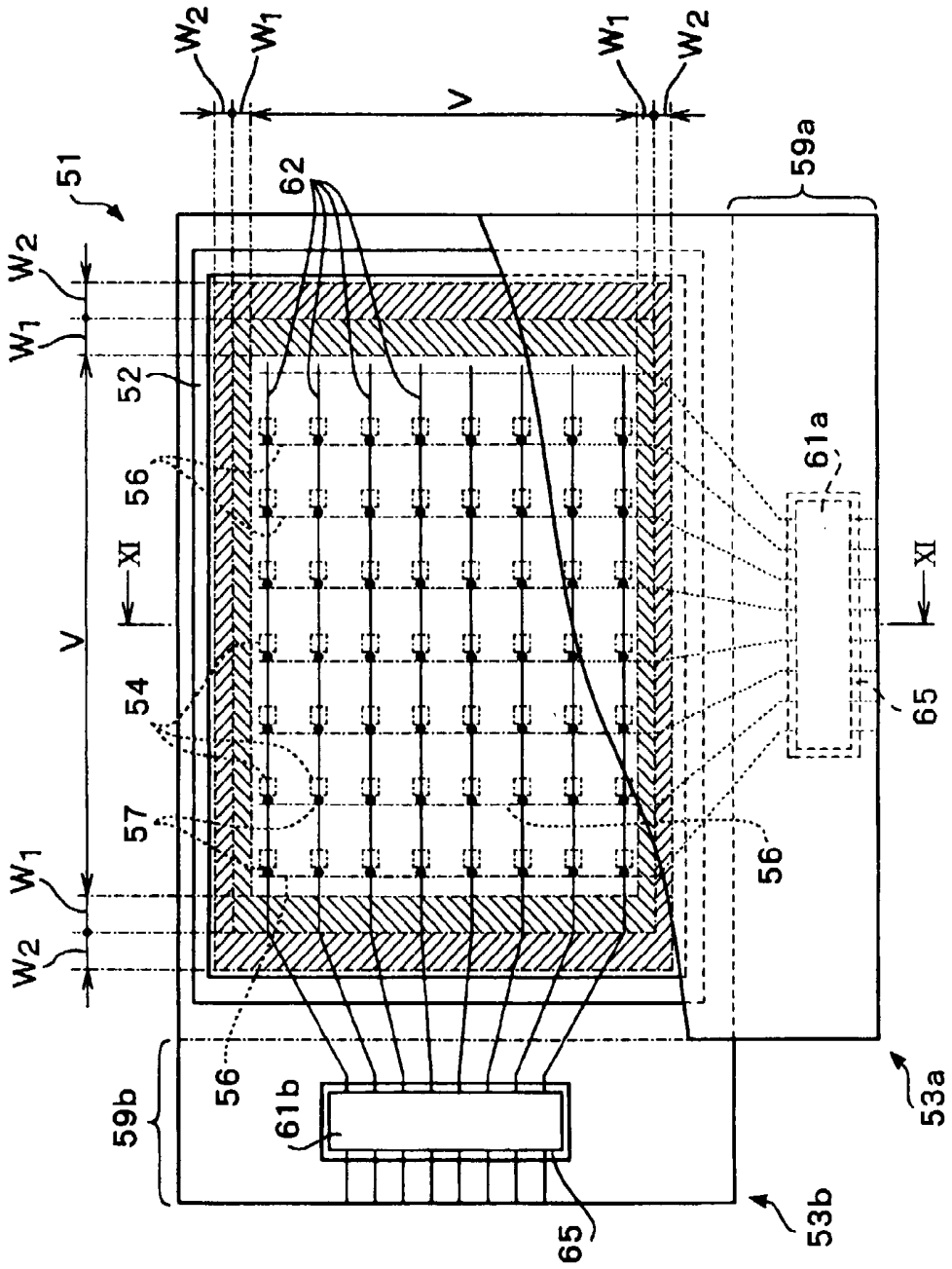
W2
W1
V
W1
W2
51
62
59a
W2
W1
52
56
XI
V
54
57
W1
W2
56
61a
XI
65
56
59b
61b
65
53a
53b

FIG. 11

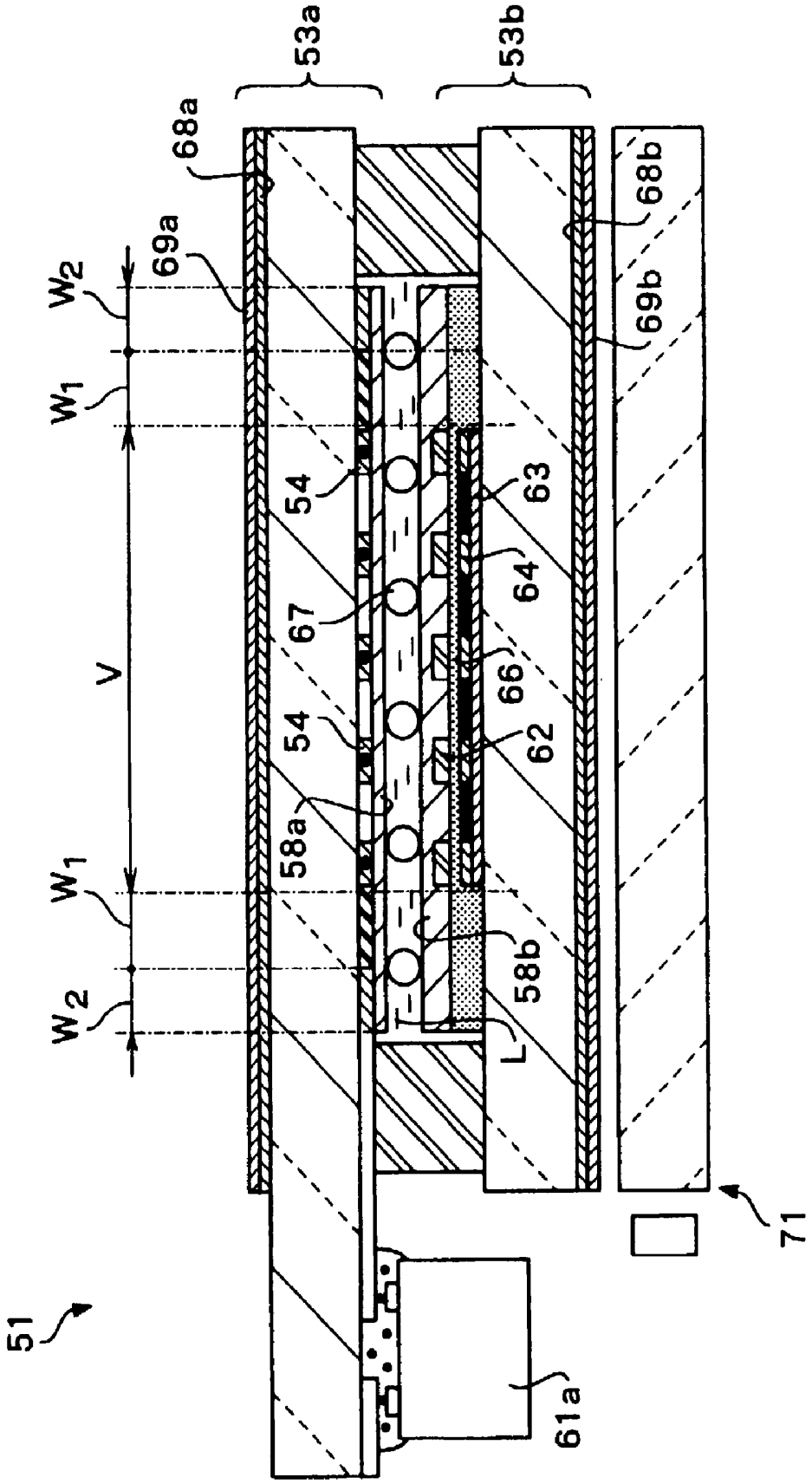
53a
53b
68a
69a
68b
69b
W2
W1
V
W1
W2
54
54
67
58a
58b
63
64
66
62
L
51
61a
71

FIG. 12

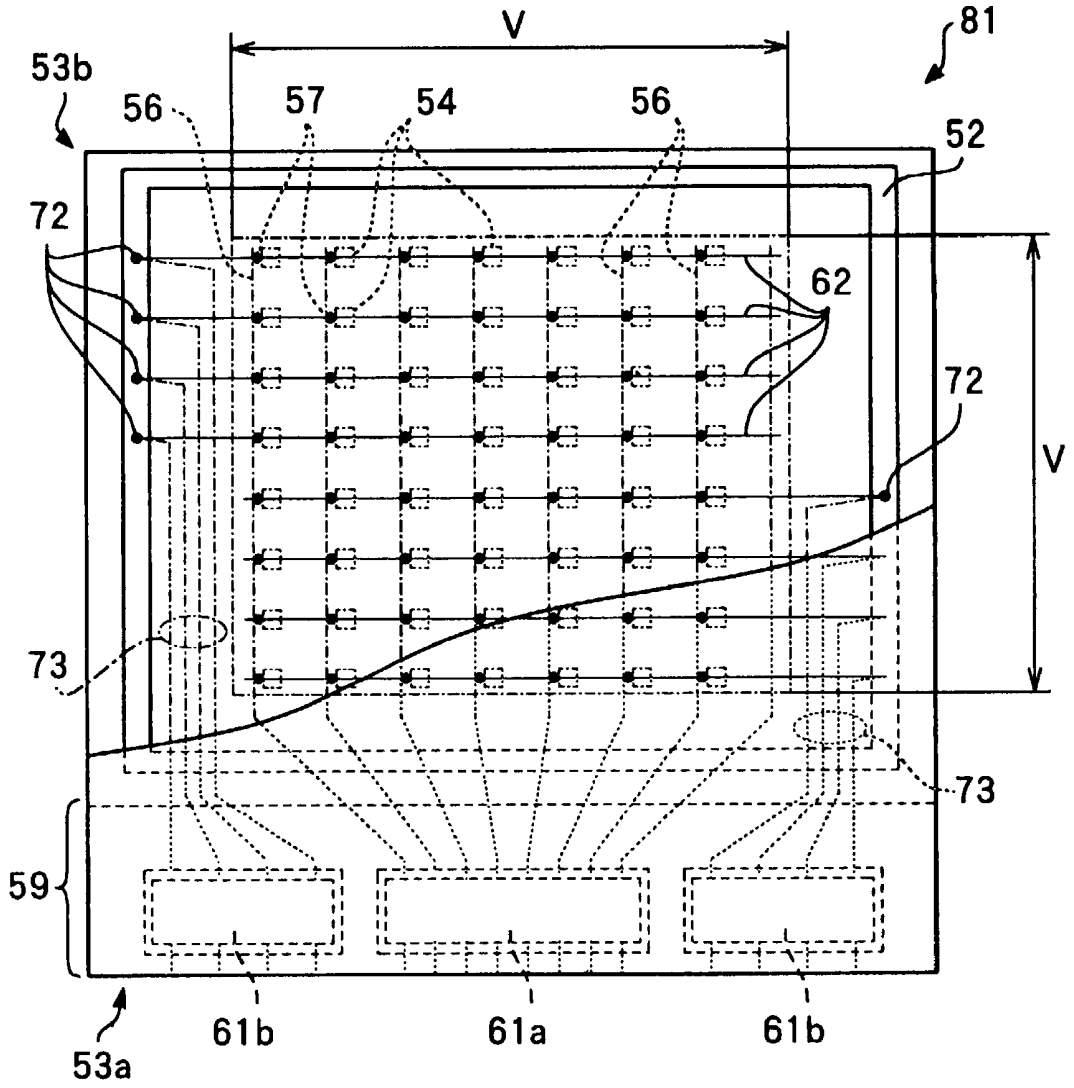

LIQUID CRYSTAL PANEL, LIQUID CRYSTAL DEVICE, AND ELECTRONIC APPARATUS

BACKGROUND OF THE INVENTION

[0001] 1. Technical Field of the Invention

[0002] The present invention relates to a liquid crystal device which displays images, for example, characters, numeric characters, and graphics, by modulating light with a liquid crystal. Furthermore, the present invention relates to electronic apparatus comprising the liquid crystal device.

[0003] 2. Description of the Related Art

[0004] In recent years, liquid crystal devices have been used widely as display portions of various sorts of electronic apparatuses, such as cellular phones, portable data terminals, etc. In these liquid crystal devices, generally, a pair of substrates individually provided with electrodes are attached to each other such that electrode-side surfaces face each other while a constant interval, that is, a so-called cell gap, is kept and, in addition, a liquid crystal is encapsulated in the cell gap.

[0005] As this liquid crystal device, a liquid crystal device of an active matrix system, in which a liquid crystal is driven by a switching element, and a liquid crystal device of a simple matrix system, in which a liquid crystal is driven without the use of the switching element, have been known. Examples of liquid crystal devices of active matrix systems include those using three-terminal type active elements, such as a TFT (Thin Film Transistor), etc., and those using two-terminal type active elements, such as a TFD (Thin Film Diode), etc, as the switching elements.

[0006] As a conventional liquid crystal device, for example, one having a structure shown in **FIG. 10** has been known. This liquid crystal device **51** includes a pair of substrates **53***a* and **53***b* attached to each other by a sealing material **52**, and as shown in **FIG. 11, a** liquid crystal is encapsulated in the space formed between these substrates, that is, in a cell gap, and therefore, a liquid crystal layer L is formed. The cell gap is maintained to have a constant dimension by spacers **67** dispersed on the surface of any one of the first substrate **53***a* and the second substrate **53***b*.

[0007] In **FIG. 10**, on the surface of the first substrate **53***a* on the liquid crystal L side, a plurality of linear line wirings **56** are arranged in parallel with each other and, therefore, arranged in the shape of stripes while pixel electrodes **54** are formed on individual line wirings **56** with TFD elements **57** therebetween. Since the line wirings **56** are formed in the shape of stripes, the pixel electrodes **54** are arranged in the shape of a dot matrix. As shown in **FIG. 11**, an orientation film **58***a* is formed on the surface of the first substrate **53***a*, on which the pixel electrodes **54** are formed.

[0008] In **FIG. 10**, in order to clearly show the structures of the pixel electrode **54** and the TFD element **57**, those elements are schematically shown to be enlarged, and the interval between those adjacent to each other is schematically shown to be larger than in practice.

[0009] The first substrate **53***a* includes a substrate overhang portion **59***a* overextending beyond a perimeter of the second substrate **53***b*, and an IC **61***a* for driving the liquid crystal is mounted on the surface of the substrate overhang portion **59***a* by an ACF (Anisotropic Conductive Film) **65**. That is, a COG (Chip On Glass) mounting system is performed. Each of the line wirings **56** extends outside the sealing material **52**, and the tip thereof is connected to a terminal, that is, a bump (not shown in the drawing), of the IC **61***a* for driving the liquid crystal.

[0010] On the surface of the second substrate **53***b* on the liquid crystal L side, a plurality of linear electrodes **62** are arranged in parallel with each other and, therefore, arranged in the shape of stripes. These electrodes **62** are formed nearly perpendicularly to the line wirings **56** on the first substrate **53***a* and, furthermore, are formed with the positional relationship of facing individual pixel electrodes **54**.

[0011] The second substrate **53***b* includes a substrate overhang portion **59***b* extending beyond the perimeter of the first substrate **53***a*, and an IC **61***b* for driving the liquid crystal is mounted on the surface of the substrate overhang portion **59***b* by an ACF **65**. That is, mounting a COG (Chip On Glass) mounting system is performed. Each of the electrodes **62** extends outside the sealing material **52**, and the tip thereof is connected to a terminal, that is, a bump (not shown in the drawing), of the IC **61***b* for driving liquid crystal.

[0012] As shown in **FIG. 11, a** transflective film **63** is formed on the surface of the second substrate **53***b* on the liquid crystal L side, a color filter film **64** is further formed thereon, and an overcoat layer **66** is further formed thereon. The aforementioned electrodes **62** are formed on the overcoat layer **66**, and an orientation film **58***b* is formed on those electrodes **62**.

[0013] A phase difference plate **68***a* is installed on the outer surface of the first substrate **53***a*, and a polarizing plate **69***a* is further installed thereon. A phase difference plate **68***b* is installed on the outer surface of the second substrate **53***b*, and a polarizing plate **69***b* is further installed thereon. An illumination device **71** which acts as a backlight is installed at the position facing the outer surface of the second substrate **53***b* on which the polarizing plate **69***b* is installed.

[0014] In **FIG. 10, a** point at which the pixel electrode **54** and a counter electrode **62** overlap one another constitutes one dot, and one color picture element, for example, one color picture element of R, G, or B, of the color filter film **64** shown in **FIG. 11** is installed corresponding to this one dot. Three color dots of R, G, and B constitute one unit and, therefore, one pixel is formed.

[0015] In **FIG. 10**, one of the ICs **61***a* and **61***b* for driving the liquid crystal supplies scanning signals to corresponding pixel electrodes **54** or corresponding counter electrodes **62**, the other of those ICs **61***a* and **61***b* for driving the liquid crystal supplies data signals to corresponding pixel electrodes **54** or corresponding counter electrodes **62** and, thereby, the orientation of the liquid crystal in a plurality of pixels arranged in the shape of a dot matrix is controlled.

[0016] In **FIG. 11**, when the surroundings of the liquid crystal device **51** are bright, external light incident from the first substrate **53***a* side is reflected at the transflective film **63** and is supplied to the liquid crystal layer L. When the surroundings of the liquid crystal device **51** are dark, the illumination device **71** emits light, and the light passes through the transflective film **63** and is supplied to the liquid crystal layer L. The light thus supplied to the liquid crystal layer L is modulated on a pixel basis by the liquid crystal,

the orientation thereof being controlled on a pixel basis. According to this, an image is displayed outside the first substrate **53***a*.

[**0017**] In **FIG. 10**, the region partitioned by a plurality of pixel electrodes **54** arranged in the shape of a matrix is a drive region, that is, an effective display region V, and images, such as characters, numeric characters, etc., are formed in this effective display region V. A dummy pixel region **W1** is formed outside the effective display region V while succeeding thereto, and a metal film region **W2** is further formed outside the dummy pixel region **W1** while succeeding thereto.

[**0018**] In the dummy pixel region **W1**, as a matter of form, a pattern in the same shape as the pixel electrodes **54** is formed. However, the pattern formed here is not a transparent electrode material, such as ITO (Indium Tin Oxide), but the portions corresponding to the electrodes are covered with opaque metal films. According to this, this dummy pixel region **W1** is made to be a light-shielding region.

[**0019**] The metal film region **W2** is formed from, for example, a metal constituting the TFD element **57**, e.g., Ta (tantalum), and is also made to be a light-shielding region. As described above, the light-shielding regions **W1** and **W2** are formed between the effective display region V and the sealing material **52**. These light-shielding regions **W1** and **W2** increase the contrast of the effective display region V by darkening the surrounding of the effective display region V, that is, by reducing the light transmittance and, therefore, improve display quality.

[**0020**] However, regarding the conventional liquid crystal device **51** shown in **FIG. 10**, since the substrate overhang portion **59***a*, on which the IC **61***a* for driving liquid crystal is mounted, and the substrate overhang portion **59***b*, on which the IC **61***b* for driving liquid crystal is mounted, overhang in directions different from each other, the external shape of the liquid crystal device **51** becomes horizontally asymmetric with respect to the effective display region V and, therefore, there has been a problem in that handling of the liquid crystal device **51** has become inconvenient.

[**0021**] In order to overcome this, the applicant of the present invention suggests a structure in which, as shown in **FIG. 12**, the substrate overhang portion **59** is installed on only a first substrate **53***a*, and both of the IC **61***a* for driving the liquid crystal on the first substrate **53***a* side and the IC **61***b* for driving the liquid crystal on the second substrate **53***b* side are mounted in common on the substrate overhang portion **59**. In this liquid crystal device **81**, since both of the ICs **61***a* and **61***b* for driving liquid crystal are mounted on one substrate overhang portion **59**, the external shape of the liquid crystal device **81** becomes horizontally symmetric with respect to the effective display region V and, therefore, handling becomes very easy.

[**0022**] In this liquid crystal device **81**, conducting materials **72** are dispersed and mixed in the inside of the sealing material **52**. Subsequently, wirings **73**, one end of which is connected to a terminal, that is, a bump (not shown in the drawing), of the IC **61***b* for driving the liquid crystal on the second substrate **53***b* side and the other end of which goes into the inside of the sealing material **52** and contacts the conducting material **72**, are formed on the liquid crystal side surface of the first substrate **53***a* concurrently with the line wirings **56**. On the other hand, the tips of the counter electrodes **62** formed on the second substrate **53***b* are extended into the inside of the sealing material **52** and contact the conducting material **72**. As described above, the wirings **73** on the first substrate **53***a* side and the counter electrodes **62** on the second substrate **53***b* side are electrically conducted and connected with each other through the conducting material **72**.

[**0023**] In the liquid crystal device **81** having the structure shown in **FIG. 12**, it is also desired that a light-shielding region is installed around the effective display region V and, display quality is improved. Regarding the conventional liquid crystal device **51** shown in **FIG. 10**, in order to install the light-shielding region around the effective display region V, the dummy pixel region **W1** and the metal film region **W2** are formed around the effective display region V on the surface of the first substrate **53***a*, on which TFD elements **54** are formed. In consideration of this, regarding the liquid crystal device **81** shown in **FIG. 12** as well, it seems possible to install a light-shielding region around the effective display region V and to improve display quality if the dummy pixel region **W1** and the metal film region **W2** are formed around the effective display region V on the first substrate **53***a*.

[**0024**] However, regarding the liquid crystal device **81** having the structure shown in **FIG. 12**, since the wirings **73** are formed between the effective display region V and the sealing material **52** on the surface of the first substrate **53***a*, on which the TFD elements **57** and the pixel electrodes **54** are formed, the dummy pixel region **W1** and the metal film region **W2** cannot be formed in this region and, therefore, another problem occurs in that the light-shielding region can not be formed in this region.

[**0025**] The present invention was made in consideration of the aforementioned problems. Accordingly, it is an object of the present invention to provide a structure, in which a light-shielding region can be formed around an effective display region without any trouble, regarding a liquid crystal device having a structure in which a conducting material and a wiring are formed.

SUMMARY OF THE INVENTION

[**0026**] In order to achieve the aforementioned object, a liquid crystal panel according to the present invention includes a pair of substrates individually provided with electrodes, a sealing material with which those substrates are attached to each other, a first terminal installed on one substrate of the pair of substrates, a second terminal which is installed on the other substrate of the pair of substrates and which is connected to the electrode on the other substrate, a conducting material for electrically connecting the first terminal and the second terminal, a wiring which is installed on the one substrate and which is connected to the first terminal, and a light-shielding film installed in at least a part of a region, which corresponds to the wiring, on the other substrate.

[**0027**] According to this liquid crystal panel, the light-shielding film is not formed on the substrate on which the wiring is formed, but is formed on the substrate facing the wiring. Consequently, even in the liquid crystal panel having a structure in which the wiring has to be formed on the surface of the one substrate, the light-shielding region can be installed around the effective display region without any trouble.

[0028] In the liquid crystal device **81** shown in **FIG. 12**, the wirings **73** are installed between the effective display region V and the sealing material **52**. As a matter of course, the present invention can be applied to the liquid crystal device having this structure. Also, the present invention can be applied to the liquid crystal device having the structure in which the wirings **73** are installed in a region other than the region between the effective display region V and the sealing material **52**, for example, outside the sealing material **52**.

[0029] In the liquid crystal panel according to the present invention, the light-shielding film can be formed from a transflective film. According to this liquid crystal panel, since the light-shielding film can be formed at the same time with formation of the transflective film, the light-shielding film can be formed easily, promptly, and precisely.

[0030] In the liquid crystal panel according to the present invention, the light-shielding film can be formed from a color filter film. According to this liquid crystal panel, since the light-shielding film can be formed at the same time with formation of the color filter film, the light-shielding film can be formed easily, promptly, and precisely.

[0031] In the liquid crystal panel according to the present invention, the light-shielding film can have a configuration in which a transflective film and a color filter film installed on the transflective film are included.

[0032] According to the liquid crystal panel having this configuration, when the liquid crystal panel is used as a light-transmissive type, transmitted light can be adequately shielded by the extended portion of the transflective film. On the other hand, when the liquid crystal panel is used as a reflective type, reflected light can be adequately shielded by the extended portion of the color filter film. According to this, regarding the transflective liquid crystal panel capable of color display, an adequate light-shielding region can be formed around the effective display region.

[0033] The liquid crystal panel according to the present invention can have a configuration in which the color filter film is composed of a first coloring layer and a second coloring layer installed on the first coloring layer, the color of the aforementioned first coloring layer is one of red, green, and blue or one of cyan, magenta, and yellow, the color of the second coloring layer is different from that of the first coloring layer, and the colors of the first coloring layer and the second coloring layer are partially different.

[0034] Such a structure of the coloring layer can be configured, for example, by the two-dimensional arrangement of laminated color of two colors selected from three colors of red, green, and blue as shown in **FIG. 5**. According to the liquid crystal panel having the configuration shown here, a light-shielding film of uniform cast can be attained compared with that in the case where a light-shielding film is formed simply in the monochromatic solid coating condition.

[0035] The liquid crystal panel according to the present invention can have a configuration in which the colors of the first coloring layer and the second coloring layer are different with the same pitch as the dot pitch in the effective display region. According to this, the color of the light-shielding film can be made more uniform in a plane.

[0036] The liquid crystal panel according to the present invention can have a configuration in which an electronic component is provided on the one substrate, and the wiring is connected to the electronic component. This liquid crystal panel is a liquid crystal panel of a so-called COG (Chip On Glass) system having a structure in which the electronic component is mounted directly on the substrate. It is considered that examples of electronic components used here include, IC chips, chip capacitors, chip coils, chip resistors, and other various chip components.

[0037] In the liquid crystal panel according to the present invention, the electronic component can be an IC chip. Although it is considered that examples of electronic components include, chip capacitors, chip coils, chip resistors, and other various chip components other than the IC chips, in the field of liquid crystal panels, in many cases, ICs for driving are mounted directly on the substrates. In the case of such a liquid crystal panel, many units of output bumps may be installed on the IC chip and, therefore, the number of wirings connected to them tends to increase. Consequently, when the present invention is applied to the liquid crystal panel having such a structure, an adequate light-shielding region can be formed around the effective display region regardless of increase in the number of wirings.

[0038] Another liquid crystal panel according to the present invention includes a first substrate provided with pixel electrodes, active elements connected to the pixel electrodes, and a first terminal, a second substrate provided with stripe-shaped electrodes facing the pixel electrodes and a second terminal connected to the electrodes, a sealing material with which the first substrate and the second substrate are attached to each other, a conducting material for electrically connecting the first terminal and the second terminal, wirings which are installed on the first substrate and which are connected to the first terminal, and a light-shielding film installed in the region, which corresponds to the wirings, on the second substrate.

[0039] The liquid crystal panel having this configuration corresponds to an active matrix type liquid crystal panel having a structure in which the active element is used as a switching element. It is considered that examples of active elements include, for example, TFD elements and TFT elements. In such a liquid crystal panel, even when the wirings are formed on the substrate on which the active elements are to be formed, the light-shielding region can be formed with precision around the effective display region without any hindrance of the wirings by employing the present invention.

[0040] In the liquid crystal panel according to the present invention, the light-shielding film can be formed from a transflective film. According to the liquid crystal panel having this configuration, since the light-shielding film can be formed at the same time with formation of the transflective film, the light-shielding film can be formed easily, promptly, and precisely.

[0041] In the liquid crystal panel according to the present invention, the light-shielding film can be formed from a color filter film. According to the liquid crystal panel having this configuration, since the light-shielding film can be formed at the same time with formation of the color filter film, the light-shielding film can be formed easily, promptly, and precisely.

[0042] In the liquid crystal panel according to the present invention, the light-shielding film can be formed from a

transflective film and a color filter film installed on the aforementioned transflective film.

[0043] According to the liquid crystal panel having this configuration, when the liquid crystal panel is used as a transmissive type, transmitted light can be adequately shielded by the extended portion of the transflective film. On the other hand, when the liquid crystal panel is used as a reflective type, reflected light can be adequately shielded by the extended portion of the color filter film. According to this, regarding the transflective liquid crystal panel capable of color display, an adequate light-shielding region can be formed around the effective display region.

[0044] The liquid crystal panel according to the present invention can have a configuration in which the color filter film is composed of a first coloring layer and a second coloring layer installed on the first coloring layer, the color of the first coloring layer is one of red, green, and blue or one of cyan, magenta, and yellow, the color of the second coloring layer is different from that of the first coloring layer, and the colors of the first coloring layer and the second coloring layer are partially different.

[0045] Such a structure of the coloring layer can be configured, for example, by the two-dimensional arrangement of laminated color of two colors selected from three colors of red, green, and blue as shown in **FIG. 5**. According to the liquid crystal panel having the configuration shown here, a light-shielding film of uniform cast can be attained compared with that in the case where a light-shielding film is formed simply in the monochromatic solid coating condition.

[0046] The liquid crystal panel according to the present invention can have a configuration in which the colors of the first coloring layer and the second coloring layer are different with the same pitch as the dot pitch in the effective display region. According to this, the color of the light-shielding film can be made more uniform in a plane.

[0047] The liquid crystal panel according to the present invention can have a configuration in which an electronic component is provided on the one substrate, and the wirings are connected to the electronic component. This liquid crystal panel is a liquid crystal panel of a so-called COG (Chip On Glass) system having a structure in which the electronic component is mounted directly on the substrate. It is considered that examples of electronic components used here include, IC chips, chip capacitors, chip coils, chip resistors, and other various chip components.

[0048] In the liquid crystal panel according to the present invention, the electronic component can be composed of an IC chip. Although it is considered that examples of electronic components include, chip capacitors, chip coils, chip resistors, and other various chip components other than the IC chips, in the field of liquid crystal panels, in many cases, ICs for driving are mounted directly on the substrates. In the case of such a liquid crystal panel, many units of output bumps may be installed on the IC chip and, therefore, the number of wirings connected to them tends to increase. Consequently, when the present invention is applied to the liquid crystal panel having such a structure, an adequate light-shielding region can be formed around the effective display region regardless of increase in the number of wirings.

[0049] In the liquid crystal panel according to the present invention, the active element can be composed of a TFD.

[0050] The liquid crystal panel according to the present invention can have a configuration in which at least a part of the light-shielding film overlaps the sealing material.

[0051] When the light-shielding film terminates at the position short of the sealing material, a gap is formed between the tip of the light-shielding film and the sealing material, light leaks out through the gap and, therefore, it is feared that the contrast of an image in the effective display region is reduced and display quality is degraded. On the other hand, according to the configuration in which the light-shielding film overlaps the sealing material as in the present invention, since no gap is formed between the light-shielding film and the sealing material, degradation of display quality due to leakage of light can be avoided with reliability.

[0052] A liquid crystal device according to the present invention is provided with the liquid crystal panel having the configuration described above.

[0053] An electronic apparatus according to the present invention is provided with the aforementioned liquid crystal device. According to the electronic apparatus having this configuration, a clear image can be visually identified by installing the light-shielding region around the effective display region of the liquid crystal panel or liquid crystal device.

BRIEF DESCRIPTION OF THE DRAWINGS

[0054] **FIG. 1** is a plan view, which includes a partially cutaway view of an embodiment of a liquid crystal device according to the present invention.

[0055] **FIG. 2** is a sectional view showing a cross-sectional structure of the liquid crystal device along the line II-II in **FIG. 1**.

[0056] **FIG. 3** is a sectional view showing a cross-sectional structure of the liquid crystal device along the line III-III in **FIG. 1**.

[0057] **FIG. 4** is a perspective enlarged view showing a TFD element indicated by an arrow IV in **FIG. 1**.

[0058] **FIG. 5** is a diagram schematically showing the cross-sectional structure of an embodiment of a light-shielding film used in the liquid crystal device shown in **FIG. 1**.

[0059] **FIG. 6** is a sectional view showing another embodiment of the liquid crystal device according to the present invention.

[0060] **FIG. 7** is a sectional view showing another embodiment of the liquid crystal device according to the present invention.

[0061] **FIG. 8** is a perspective view showing an example of a cellular phone which is an embodiment of the electronic apparatus according to the present invention.

[0062] **FIG. 9** is a block diagram showing another embodiment of the electronic apparatus according to the present invention.

[0063] **FIG. 10** is a plan view, which includes a partially cutaway view of an example of a conventional liquid crystal device.

[0064] **FIG. 11** is a sectional view showing a cross-sectional structure of the liquid crystal device along the line XI-XI in **FIG. 10**.

[0065] **FIG. 12** is a plan view, which includes a partially cutaway view of an example of a liquid crystal device related to the liquid crystal device according to the present invention.

DETAILED DESCRIPTION OF THE PREFERRED EMBODIMENTS

[0066] First Embodiment

[0067] The case where the present invention is applied to a liquid crystal device of an active matrix system, in which the TFD element is used as the switching element, and of a COG system, will be described below as an example. **FIG. 1** shows an embodiment of the liquid crystal device. The liquid crystal device **1** shown here is formed by joining, that is, attaching, a first substrate **2***a* installed on the near side in the drawing and a second substrate **2***b* installed on the far side in the drawing to each other with a sealing material **3**.

[0068] The region surrounded by the sealing material **3**, first substrate **2***a*, and second substrate **2***b* constitute a gap having a constant height, that is, a so-called cell gap. Furthermore, an opening **3***a* for injecting liquid crystal is formed at a part of the sealing material **3**. A liquid crystal is injected into the cell gap through the opening **3***a* for injecting liquid crystal, and after the injection is completed, the opening **3***a* for injecting liquid crystal is sealed with a resin, etc. **FIG. 2** shows a cross-sectional structure of the liquid crystal device **1** along the line II-II shown in **FIG. 1**. As shown in **FIG. 2**, on the underside of the second substrate **2***b* (the lower side of the structure shown in **FIG. 2**), an illumination device **10** including a light emission source **7** and a light guide element **8** is installed as a backlight.

[0069] In **FIG. 1**, the first substrate **2***a* includes a substrate overhang portion **2***c* overhanging outside the second substrate **2***b*, and ICs **4***a* and **4***b* for driving liquid crystal are mounted on the substrate overhang portion **2***c* by a conducting adhesion element, for example, ACFs (Anisotropic Conductive Films) **6**. The IC **4***a* for driving liquid crystal and the IC **4***b* for driving liquid crystal have different characteristics. The reason two types of ICs for driving liquid crystal having different characteristics are used as described above is that values of the voltages used are different between the first substrate **2***a* side and the second substrate **2***b* side, in other words, between a scanning line drive system and a signal line drive system, and, therefore, those cannot be covered with one IC chip.

[0070] In **FIG. 2**, the first substrate **2***a* includes a base material **9***a*, and a plurality of pixel electrodes **14***a* are formed on the inner surface, that is, the surface on the liquid crystal L side, of the base material **9***a*. As shown in **FIG. 1**, on the inner surface of the first substrate **2***a*, a plurality of linear line wirings **32** are formed in parallel with each other and in the shape of stripes, TFD elements **33** are formed in order to be conductively connected to those line wirings **32**, and the plurality of pixel electrodes **14***a* are formed in the shape of a dot matrix with those TFD elements **33** therebetween. As shown in **FIG. 2**, an orientation film **16***a* is formed on the pixel electrodes **14***a*, TFD elements **33**, and the line wirings **32**. A phase difference plate **17***a* is formed on the outer surface of the base material **9***a*, and a polarizing plate **18***a* is further formed thereon.

[0071] The structure in the neighborhood of one TFD element indicated by an arrow IV in **FIG. 1** and **FIG. 2** is shown in, for example, **FIG. 4**. **FIG. 4** shows the an embodiment using TFD elements having a so-called Back-to-Back (back-to-back) structure. In **FIG. 4**, the line wirings **32** are formed to have a three-layer structure composed of a first layer **32***a* formed from, for example, TaW (tantalum-.tungsten), a second layer **32***b* formed from, for example, Ta_2O_5 (tantalum oxide), which is an anodic oxidation film, and a third layer **32***c* formed from, for example, Cr.

[0072] The TFD element **33** is configured by connecting a first TFD portion **33***a* and a second TFD portion **33***b* in series. The first TFD portion **33***a* and the second TFD portion **33***b* are configured to have a three-layer structure of a first metal layer **36** formed from TaW, an insulation layer **37** of Ta_2O_5 formed by anodic oxidation, and a second metal layer **38** of Cr which is the same layer as the third layer **32***c* of the line wiring **32**.

[0073] The first TFD portion **33***a* is configured to have a laminated structure in which a current from the line wiring **32** side passes in the order of the second metal layer **38**→the insulation layer **37**→the first metal layer **36**. On the other hand, the second TFD portion **33***b* is configured to have a laminated structure in which a current from the line wiring **32** side passes in the order of the first metal layer **36**→the insulation layer **37**→the second metal layer **38**. By connecting a pair of the TFD portions **33***a* and **33***b* in series while being opposite to each other with respect to the electrical directions and, therefore, by constituting the TFD element having a back-to-back structure, stabilization of a switching characteristic of the TFD element is achieved. The pixel electrode **14***a* is formed from, for example, ITO, in order to be conductively connected to the second metal layer **38** of the second TFD portion **33***b*.

[0074] In **FIG. 2**, the second substrate **2***b* includes a base material **9***b*, a transflective film **11** is formed on the inner surface, that is, the surface of the liquid crystal L side, of the base material **9**, a color filter film **12** is further formed thereon, an overcoat film **13** is formed thereon, second electrodes **14***b* are formed thereon, and an orientation film **16***b* is further formed thereon. A phase difference plate **17***b* is formed on the outer surface of the base material **9***b*, and a polarizing plate **18***b* is further formed thereon.

[0075] As shown in **FIG. 1**, the second electrodes **14***b* are formed into the shape of stripes by arranging a plurality of linear electrodes in parallel with each other in order to intersect the line wirings **32**. In **FIG. 1**, in order to clearly show an electrode pattern, the interval between the second electrodes **14***b* is schematically shown being greatly enlarged. However, the interval between the second electrodes **14***b* is formed to be very narrow in accordance with the dot pitch of the pixel electrodes **14***a*.

[0076] The cross points of the pixel electrodes **14***a* and the second electrodes **14***b* are arranged in the shape of a dot matrix, each of these cross points constitutes individually one dot, and individual color patterns of the color filter film **12** shown in **FIG. 2** correspond to the one dot. Regarding the color filter film **12**, for example, three primary colors of R (red), G (green), and B (blue) constitute one unit and,

therefore, constitute one pixel. That is, three dots constitute one unit and, therefore, constitute one pixel.

[0077] The base materials **9***a* and **9***b* are formed from, for example, glass and plastic. The transflective film **11** is formed from a light reflective material, for example, Al (aluminum). However, in order to achieve the semi-transmissive and reflective functions, sometimes, the light reflective material is formed to have a thickness thereof reduced to the extent that light can be transmitted, or sometimes, an opening for passing the light through is formed at a proper position of the transflective film **11** with a proper area ratio.

[0078] The color filter film **12** is formed by applying a coating of pigment into an appropriate pattern of mosaic arrangement, stripe arrangement, delta arrangement, etc., by the use of a known method for forming a color picture element, for example, an ink-jet method and a pigment dispersion method. The overcoat film **13** is formed by applying a uniform coating of an appropriate light-transmissive resin material by the use of, for example, a spin coating method and roll coating method.

[0079] Regarding the electrodes **14***a* and **14***b*, for example, films of ITO (Indium Tin Oxide) are applied by the use of a known film application method, such as a sputtering method and a vacuum evaporation method, and furthermore, are formed into desired patterns by a photoetching method. The orientation films **16***a* and **16***b* are formed by, for example, a method, in which a coating of polyimide solution is applied and, thereafter, baking is performed, and an offset printing method.

[0080] In **FIG. 1**, on the substrate overhang portion **2***c* of the first substrate **2***a*, wirings **19***a* extending from the line wirings **32** without modification and wirings **19***b* connected to the second electrodes **14***b* on the second substrate **2***b* through the conducting material **21** (refer to **FIG. 2**) dispersed in the sealing material are formed. Terminals **22** are formed on the side edge portion of the substrate overhang portion **2***c*. Each of the portions, at which the wirings **19***a* and the second electrodes **14***b* are connected by the conducting material **21**, functions as a terminal.

[0081] In **FIG. 2**, in order to clearly show the whole liquid crystal device **1**, the cross section of the conducting material **21** is schematically indicated in the shape of an ellipse. However, in practice, the conducting material **21** is formed in the shape of a sphere or a cylinder, and the size thereof is very small relative to the line width of the sealing material **3**. Consequently, a plurality of conducting materials **21** can exist in the line width direction of the sealing material **3**.

[0082] Since the liquid crystal device **1** according to the present embodiment is configured as described above, regarding this liquid crystal device **1**, two types of display methods of the reflective display and transmissive display can be performed selectively. Regarding the reflective display, in **FIG. 2**, the light taken from outside of the first substrate **2***a* side is reflected by the transflective film **11**, and is supplied to the layer of the liquid crystal L. Under this condition, the orientation of the liquid crystal is controlled on a pixel basis by controlling the voltage applied to the liquid crystal L on a pixel basis and, therefore, the light supplied into the layer of the liquid crystal L is modulated on a pixel basis, and the modulated light is supplied into the polarizing plate **18***a*. According to this, images, such as characters, are displayed outside the first substrate **2***a*.

[0083] On the other hand, when the transmissive display is performed by the liquid crystal device **1**, the light emission source **7** of the illumination device **10** is made to emit. The light from the light emission source **7** is introduced in the inside of the light guide element **8** through a light incident surface **8***a*, and is emitted to the outside through a light exit surface **8***b* while being two-dimensionally spread and propagated in the inside of the light guide element **8**. According to this, plane-shaped light is supplied to the layer of the liquid crystal L. This light is modulated by the liquid crystal L and, therefore, display is performed. This is the same as that in the case of the reflective display.

[0084] In either the case of the reflective display and the case of the transmissive display, images, such as characters, are formed in an effective display region V, that is, a drive region V, which is the region partitioned by picture elements, that is, pixels, formed at the portion where the pixel electrodes **14***a* arranged in the shape of a dot matrix and the counter electrodes **14***b* facing them are overlapped.

[0085] In the present embodiment, as shown in **FIG. 2** and as shown in **FIG. 3** which is a sectional view along the line **111-111** shown in **FIG. 1, a** light-shielding film **23** formed from a laminated structure of an extended portion **11***a* extended from the transflective film **11** and an extended portion **12***a* extended from the color filter film **12** is installed in the outside region which is on the inner surface of the second substrate **2***b* facing the first substrate **2***a* where the TFD elements **33** are formed and which continues to the effective display region V.

[0086] Regarding the present embodiment, as shown in **FIG. 2** and **FIG. 3**, this light-shielding film **23** is extended continuously from the effective display region V, is passed under the sealing material **3**, is extended outside the sealing material **3**, and covers almost all over the surface of the second substrate **2***b*. According to this, in **FIG. 1**, the peripheral region W which is outside the effective display region V and which is inside the sealing material **3** is completely covered with the light-shielding film **23**.

[0087] When the liquid crystal device **1** performs transmissive display, by the action of the extended portion **11***a* extended from the transflective film **11**, the light-shielding film **23** installed in the peripheral region W of the effective display region V prevents light from the illumination device **10** from leaking from the peripheral region W of the effective display region V to the outside. When the liquid crystal device **1** performs the reflective display, by the action of the extended portion **12***a* extended from the color filter film **12**, the light-shielding film **23** prevents the external light from being reflected in the peripheral region W of the effective display region V. Accordingly, in either the case of the transmissive display and the case of the reflective display, leakage of the light from the peripheral region W of the effective display region V to the outside can be prevented, contrast of the image formed in the effective display region V can be maintained at a high level and, therefore, display quality can be maintained at a high level.

[0088] In the liquid crystal device **1** according to the present embodiment, as shown in **FIG. 1** and **FIG. 3**, since wirings **19***b* are formed in the portion corresponding to the peripheral region W of the effective display region V on the inner surface of the first substrate **2***a*, the light-shielding film **23** cannot be formed by dummy pixels or metal films in the

peripheral region W on the first substrate **2***a* on which TFD elements **33** and pixel electrodes **14***a* are formed in contrast to that in the case of the conventional liquid crystal device shown in **FIG. 10** and **FIG. 11**. However, in the present embodiment, since the light-shielding film **23** is formed on the surface of the second substrate **2***b* corresponding to the peripheral region W as shown in **FIG. 3**, it has become possible to install the light-shielding film **23** without any trouble regardless of existence of the wirings **19***b*.

[**0089**] The transflective film **11** in the effective display region V is configured to achieve both semi-transmissive and semi-reflective functions by, for example, reducing film thickness and making an opening at a proper position. On the other hand, the extended portion **11***a* which acts as the light-shielding film **23** may be formed in order to perform both the semi-transmissive function and the semi-reflective function similarly to the transflective film **11**, or may be formed not to perform semi-transmissive function.

[**0090**] However, since the primary function of the extended portion **11***a* is to shield the light from the illumination device **10** in the periphery of the effective display region V, it may be desirable that the extended portion **11***a* is formed not to perform the semi-transmissive function. In order that the semi-transmissive function is not performed as described above, for example, the film thickness of the transflective film **11** may be increased in the peripheral region W of the effective display region V, or such a measure that no opening for passing through the light is made in the peripheral region W of the effective display region V may be taken.

[**0091**] The color filter film **12** placed in the effective display region V is formed by, for example, two-dimensionally arranging the three color elements of R (red), G (green), and B (blue) or the three color elements of C (cyan), M (magenta), and Y (yellow) in a predetermined repeated pattern, such as mosaic arrangement, stripe arrangement, and delta arrangement.

[**0092**] On the other hand, the extended portion **12***a* which acts as the light-shielding film **23** does not necessarily have a pattern including the combination of the three color elements. For example, as shown in **FIG. 5**, it is possible for the extended portion **12***a* to have a pattern formed by choosing two colors from R, G, and B or C, M, and Y while the combination is varied, laminating them in order to form a unit color, and alternately and two-dimensionally (that is, in the vertical direction of the paper surface in **FIG. 5**) arranging those unit colors having different colors.

[**0093**] The color filter film **12** placed in the effective display region V is formed by arranging individual color picture elements in accordance with picture elements, that is, pixels. However, regarding the extended portion **12***a* which acts as the light-shielding film **23**, the sizes of individual color picture elements are not necessarily made to be the sizes in accordance with the pixels, and the size can be made larger than that of the pixel. However, in order to efficiently prevent light reflection in the extended portion **12***a*, it is desirable to make the cast of the extended portion **12***a* uniform two-dimensionally. In order to achieve this, for example, it is desirable to arrange the unit colors constituting the extended portion **12***a* with the same dot pitch as the dot pitch of the pixels of the color filter film **12**.

[**0094**] In the embodiment shown in **FIG. 2** and **FIG. 3**, the light-shielding film **23** is formed by the laminated structure of the extended portion **11***a* of the transflective film **11** and the extended portion **12***a* of the color filter film **12**. However, when it is functionally allowable, the light-shielding film **23** can be formed from the single-layer film of any one of the extended portion **11***a* of the transflective film **11** and the extended portion **12***a* of the color filter film **12**.

[**0095**] Although the manufacturing step of the liquid crystal device **1** may become complicated, it is also possible to form the light-shielding film **23** from other materials independent of the transflective film **11** and the color filter film **12**.

[**0096**] In the present embodiment, as is shown in **FIG. 2** and **FIG. 3**, the extended portion **11***a* of the transflective film **11** and the extended portion **12***a* of the color filter film **12** constituting the light-shielding film **23** are formed widely while being passed under the sealing material **3** and covering almost all over the surface of the second substrate **2***b*.

[**0097**] However, the extended regions of the extended portion Ila and the extended portion **12***a* are not limited to this and, for example, as shown in **FIG. 6**, it is possible to extend the extended portion **11***a* and the extended portion **12***a* to the position in contact with or nearly in contact with the inner wall of the sealing material **3**, or as shown in **FIG. 7**, it is possible to extend the extended portion **11***a* and the extended portion **12***a* to the position inside the sealing material **3**.

[**0098**] Second Embodiment

[**0099**] **FIG. 8** shows a cellular phone which is an embodiment of the electronic apparatus according to the present invention. The cellular phone **40** shown here is configured by containing various constituents, for example, an antenna **41**, a loudspeaker **42**, key switches **43**, and a microphone **44**, in a sheath case **46**. A liquid crystal device **50** used as a display device and a control circuit substrate **47** are contained in the inside of the sheath case **46**.

[**0100**] Regarding the liquid crystal device **50**, an upper surface in the drawing is the display surface. A transparent cover **48** for protecting the liquid crystal device **50** and, in addition, for ensuring the visibility of the display surface is installed on the sheath case **46** facing the display surface. The liquid crystal device **50** can be composed of, for example, the liquid crystal device **1** shown in **FIG. 1**.

[**0101**] In the cellular phone **40** shown in **FIG. 8**, signals input through the key switches **43** and a microphone **44** and received data by the antenna **41**, etc., are input into the control circuit of the control circuit substrate **47**. Subsequently, the control circuit displays images, such as numeric characters, characters, and graphics, on the display surface of the liquid crystal device **50** based on the various input data, and furthermore, transmits the transmit data from the antenna **41**.

[**0102**] **FIG. 9** shows an embodiment of an electric control system used for the cellular phone shown in **FIG. 8** or other electronic apparatuses. The electric control system shown here includes a display information output source **90**, a display information processing circuit **91**, a power source circuit **92**, a timing generator **93**, and a liquid crystal device **94** as a display device. The liquid crystal device **94** includes a liquid crystal panel **95** and a driving circuit **96**. The liquid

crystal device **94** can be configured by the use of the liquid crystal device **1** shown in **FIG. 1**.

[**0103**] The display information output source **90** is provided with a memory, such as a ROM (Read Only Memory) and a RAM (Random Access Memory), a storage unit, such as various disks, a tuning circuit for tuning and outputting a digital image signal, and the like, and supplies the display information, such as an image signal in a predetermined format, to the display information processing circuit **91** based on various clock signals generated by the timing generator **93**.

[**0104**] The display information processing circuit **91** is provided with known various circuits, for example, a serial-parallel converter, an amplifying inverting circuit, a rotation circuit, a gamma correction circuit, and a clamping circuit, performs a processing of input display information, and supplies the image signal to a driving circuit **96** together with the clock signal CLK. The driving circuit **96** is configured to include a scanning line driving circuit, a data line driving circuit, an inspection circuit, etc. The power source circuit **92** supplies a predetermined voltage to each constituent.

[**0105**] (Other Embodiments)

[**0106**] As described above, the present invention has been described using the preferred embodiments. However, the present invention is not limited to the embodiments, and can be variously modified within the scope of the invention described in the claims.

[**0107**] For example, in the embodiments described above, the present invention has been applied to the liquid crystal device of active matrix system using the TFD element as the switching element. However, the present invention can also be applied to the liquid crystal device of active matrix system having a structure in which a three-terminal type switching element, such as a TFT (Thin Film Transistor), is used as the active element, or also be applied to the liquid crystal device of simple matrix system in which no active element is used.

[**0108**] The electronic apparatus according to the present invention is not limited to the cellular phone shown in **FIG. 8**, and it can be other arbitrary electronic apparatus, for example, a portable data terminal and a digital camera.

[**0109**] Advantages

[**0110**] As described above, by the use of the liquid crystal panel, liquid crystal device, and electronic apparatus according to the present invention, since the light-shielding film installed around the effective display region is not formed on the substrate on which the wirings are formed, but is formed on the substrate facing the wirings, even in the liquid crystal device having the structure in which the wirings have to be formed on the surface of one substrate, the light-shielding region can also be installed around the effective display region without any trouble.

[**0111**] The entire disclosure of Japanese patent application number 2001-243027 filed Aug. 9, 2001 is hereby incorporated by reference.

1. A liquid crystal panel comprising:

a pair of substrates individually provided with electrodes;

a sealing material attaching said pair of substrates to each other;

a first terminal installed on one substrate of the pair of substrates;

a second terminal installed on the other substrate of the pair of substrates and which is connected to the electrode on the other substrate;

a conducting material electrically connecting the first terminal and the second terminal;

a wiring installed on the one substrate and which is connected to the first terminal; and

a light-shielding film installed in at least a part of a region, which corresponds to the wiring, on the other substrate.

2. The liquid crystal panel according to claim 1, wherein the light-shielding film comprises a transflective film.

3. The liquid crystal panel according to claim 1, wherein the light-shielding film comprises a color filter film.

4. The liquid crystal panel according to claim 1, wherein the light-shielding film comprises a transflective film and a color filter film installed on the transflective film.

5. The liquid crystal panel according to claim 3, wherein the color filter film comprises a first coloring layer and a second coloring layer installed on the first coloring layer, the color of the first coloring layer is one of red, green, and blue or one of cyan, magenta, and yellow, the color of the second coloring layer is different from that of the first coloring layer, and the colors of the first coloring layer and the second coloring layer are partially different.

6. The liquid crystal panel according to claim 5, wherein the colors of the first coloring layer and the second coloring layer are different with the same pitch as a dot pitch in an effective display region.

7. The liquid crystal panel according to claim 1, wherein an electronic component is provided on the one substrate, and the wiring is connected to the electronic component.

8. The liquid crystal panel according to claim 7, wherein the electronic component further comprises an IC chip.

9. A liquid crystal panel comprising:

a first substrate provided with pixel electrodes, active elements connected to the pixel electrodes, and a first terminal;

a second substrate provided with stripe-shaped electrodes facing the pixel electrodes and a second terminal connected to the electrodes;

a sealing material attaching the first substrate to the second substrate;

a conducting material electrically connecting the first terminal and the second terminal;

wirings installed on the first substrate and connected to the first terminal; and

a light-shielding film installed in a region, which corresponds to the wirings, on the second substrate.

10. The liquid crystal panel according to claim 9, wherein the light-shielding film comprises a transflective film.

11. The liquid crystal panel according to claim 9, wherein the light-shielding film comprises a color filter film.

12. The liquid crystal panel according to claim 9, wherein the light-shielding film comprises a transflective film and a color filter film installed on the transflective film.

13. The liquid crystal panel according to claim 11, wherein the color filter film comprises a first coloring layer

and a second coloring layer installed on the first coloring layer, the color of the first coloring layer is one of red, green, and blue or one of cyan, magenta, and yellow, the color of the second coloring layer is different from that of the first coloring layer, and the colors of the first coloring layer and the second coloring layer are partially different.

14. The liquid crystal panel according to claim 13, wherein the colors of the first coloring layer and the second coloring layer are different with the same pitch as a dot pitch in an effective display region.

15. The liquid crystal panel according to claim 9, wherein an electronic component is provided on the first substrate, and the wirings are connected to the electronic component.

16. The liquid crystal panel according to claim 15, wherein the electronic component further comprises an IC chip.

17. The liquid crystal panel according to claim 9, wherein the active element further comprises a TFD.

18. The liquid crystal panel according to claim 1, wherein at least a part of the light-shielding film overlaps the sealing material.

19. A liquid crystal device comprising the liquid crystal panel according to claim 1.

20. An electronic apparatus comprising the liquid crystal device according to claim **19**.

* * * * *

专利名称(译)	液晶面板，液晶装置和电子设备		
公开(公告)号	US20030038904A1	公开(公告)日	2003-02-27
申请号	US10/215269	申请日	2002-08-08
[标]申请(专利权)人(译)	金子HIDEKI 田中千寻 露木TADASHI		
申请(专利权)人(译)	金子HIDEKI 田中千寻 露木TADASHI		
当前申请(专利权)人(译)	金子HIDEKI 田中千寻 露木TADASHI		
[标]发明人	KANEKO HIDEKI TANAKA CHIHIRO TSUYUKI TADASHI		
发明人	KANEKO, HIDEKI TANAKA, CHIHIRO TSUYUKI, TADASHI		
IPC分类号	G02F1/13 G02F1/1333 G02F1/1335 G02F1/1339 G02F1/1345 G02F1/1365 G09F9/30 G09F9/35		
CPC分类号	G02F1/133512 G02F1/133555 G02F1/1345 G02F2001/133388 G02F2001/13456		
优先权	2001243027 2001-08-09 JP		
其他公开文献	US7187426		
外部链接	Espacenet USPTO		

摘要(译)
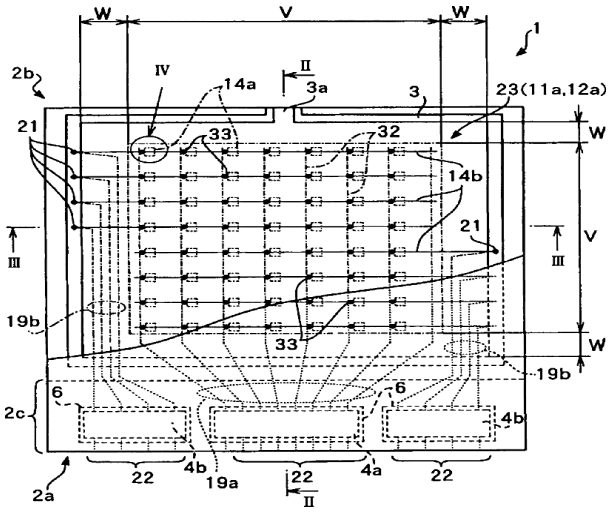
液晶面板包括：一对基板2a和2b，分别设置有电极14a和14b;密封材料3，基板2a和2b彼此连接;第一端子，安装在一个基板2a上;第二端子，安装在另一个基板2b上并连接到基板2b上的电极14b，用于连接第一端子和第二端子的导电材料21，安装在基板2a上并连接到基板2a的导线19b。第一端子和安装在另一个基板2b上的与布线19b对应的区域的至少一部分中的遮光膜23。