US007335450B2

(12) **United States Patent**
Sun et al.

(10) **Patent No.: US 7,335,450 B2**
(45) **Date of Patent: Feb. 26, 2008**

(54) **LIQUID CRYSTAL DISPLAY PANEL AND MANUFACTURING METHOD OF COLOR FILTER AND LIQUID CRYSTAL DISPLAY PANEL**

(75) Inventors: **Wei-Chieh Sun**, Taipei County (TW); **Ming-Sheng Lai**, Taipei (TW); **Rung-Guang Hu**, Taoyuan County (TW); **Hsiang-Pin Fan**, Hsinchu (TW)

(73) Assignee: **Au Optronics Corporation**, Hsinchu (TW)

(*) Notice: Subject to any disclaimer, the term of this patent is extended or adjusted under 35 U.S.C. 154(b) by 637 days.

(21) Appl. No.: **10/709,037**

(22) Filed: **Apr. 8, 2004**

(65) **Prior Publication Data**

US 2005/0147899 A1 Jul. 7, 2005

(30) **Foreign Application Priority Data**

Dec. 26, 2003 (TW) ..... 92136978 A

(51) **Int. Cl.**
G02F 1/1335 (2006.01)

(52) **U.S. Cl.** **430/7**; 349/106

(58) **Field of Classification Search** ..... None
See application file for complete search history.

(56) **References Cited**

U.S. PATENT DOCUMENTS

5,844,645 A * 12/1998 Kashimoto 349/106
5,910,829 A 6/1999 Shimada et al. 349/110
6,384,882 B1 5/2002 Nagayama et al. 349/110
2001/0019388 A1 * 9/2001 Kim et al. 349/129

FOREIGN PATENT DOCUMENTS

CN 1318154 A 10/2001
CN 1444059 A 9/2003
JP 2000-029014 1/2000
JP 2000-111894 4/2000

* cited by examiner

Primary Examiner—John A. McPherson
(74) *Attorney, Agent, or Firm*—Jianq Chyun IP Office

(57) **ABSTRACT**

A color filter and a manufacturing method thereof are provided. In the method of the invention, a substrate having a display area and a non-display area is provided. Thereafter, a black matrix is formed over the substrate, wherein black matrix defines the display area into a plurality of sub-pixel areas, and covers the non-display area, which forms an edge of the display area. Then, a color filter unit is formed in each sub-pixel area, and a light shielding layer is formed over the black matrix simultaneously. Accordingly, the shielding layer of the color filter provided by the present invention is capable of effectively reducing the light leakage from the edge of the display area.

4 Claims, 6 Drawing Sheets

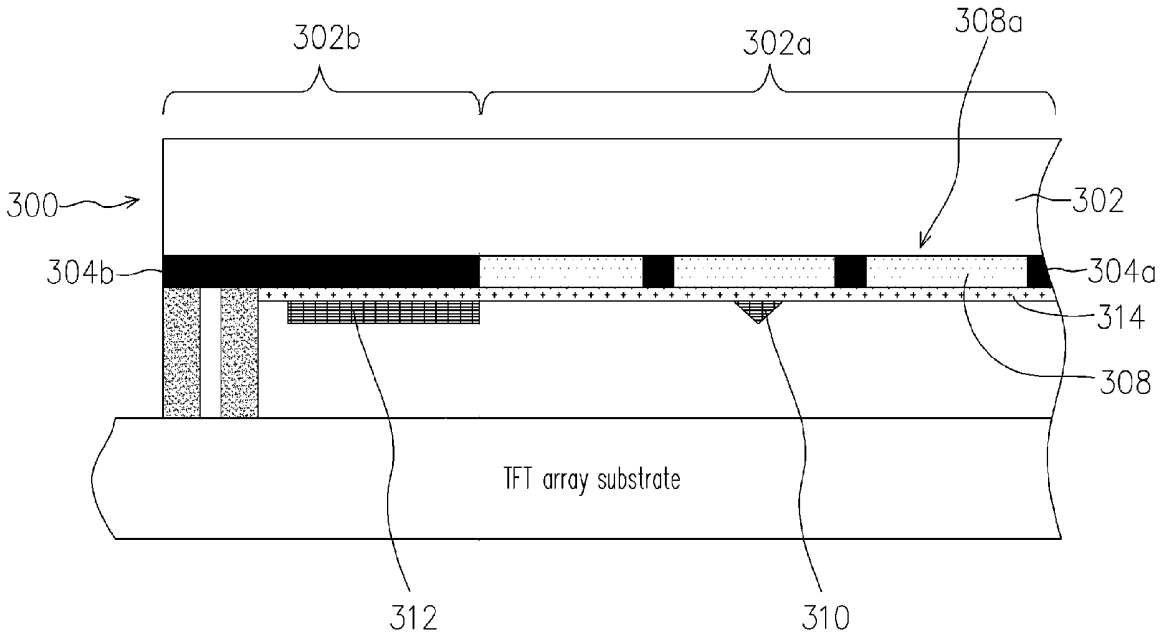

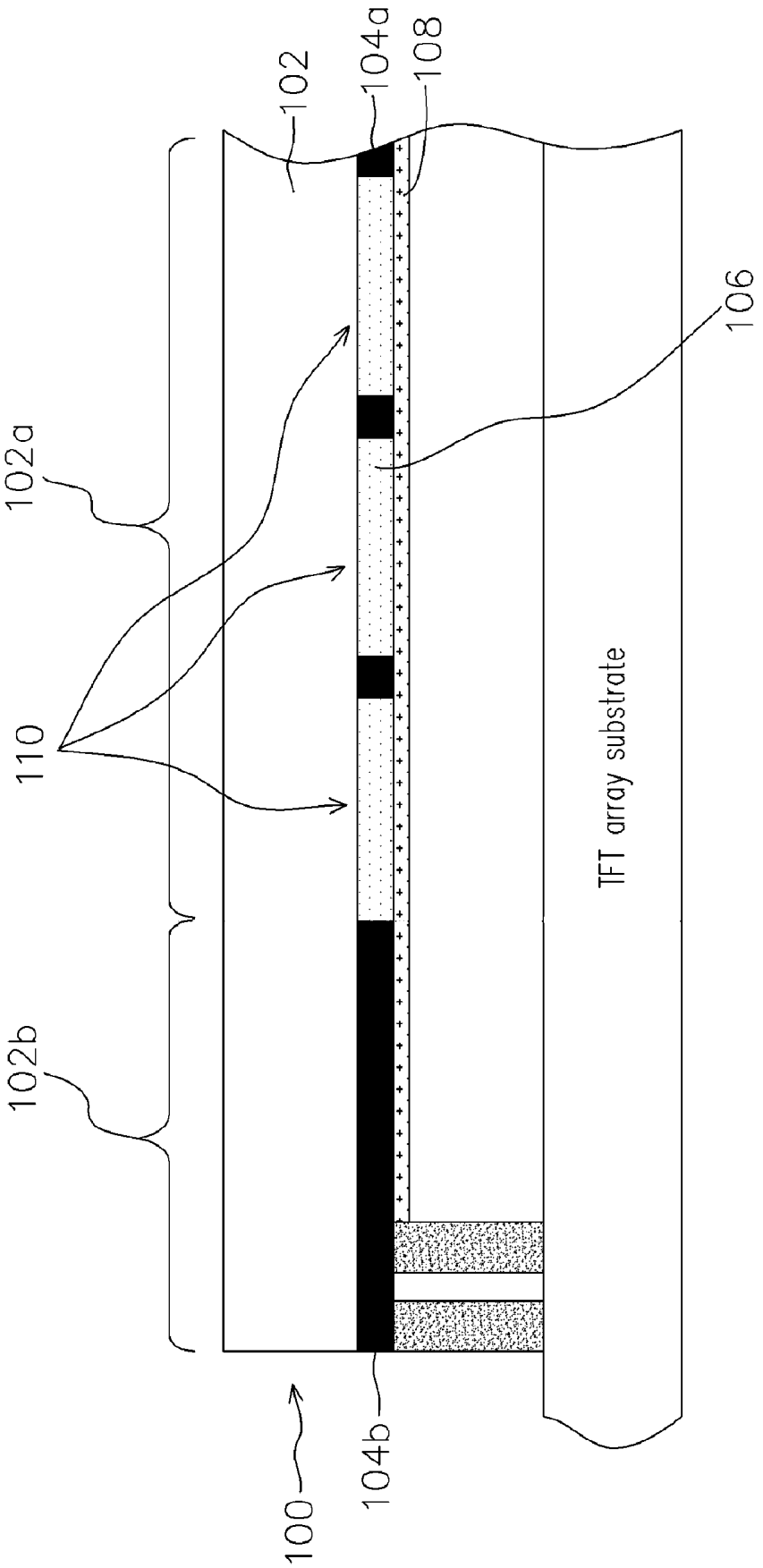

FIG. 1 (PRIOR ART)

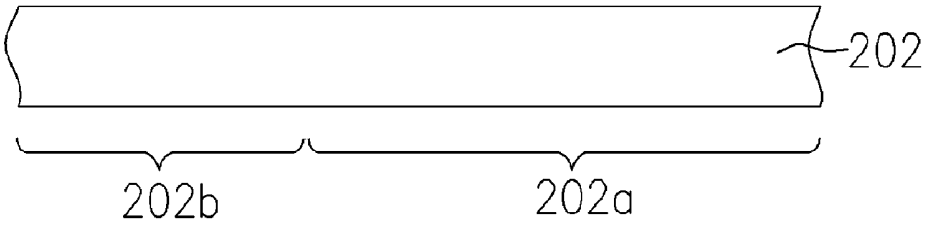

FIG. 2A

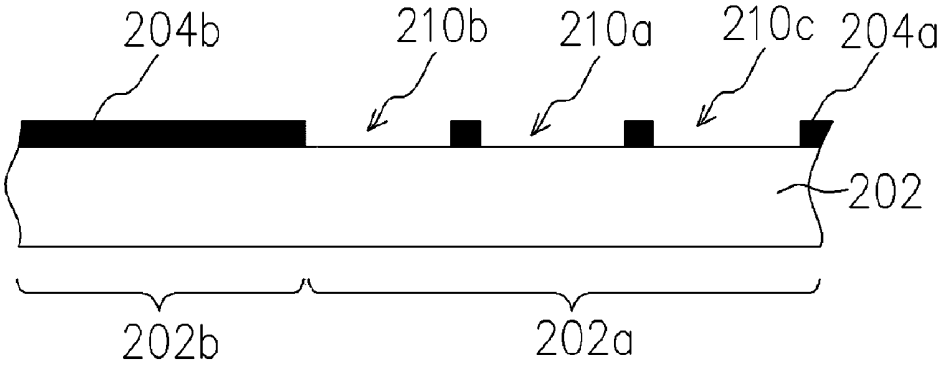

FIG. 2B

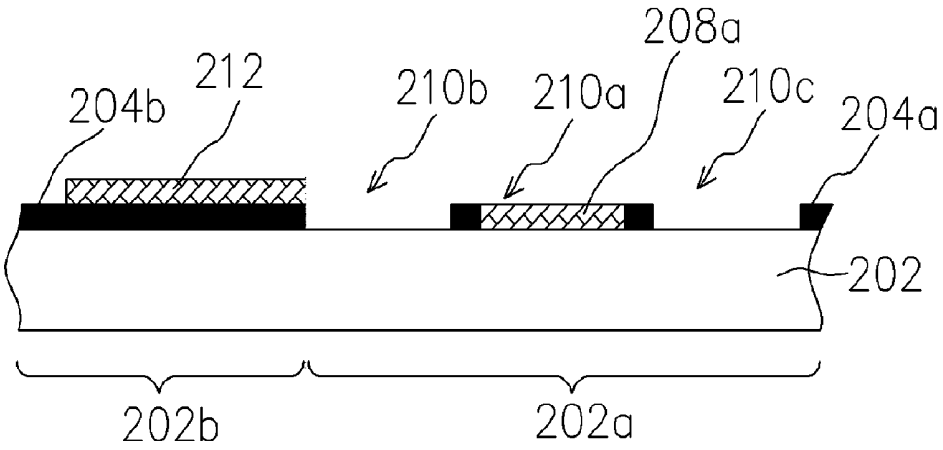

FIG. 2C

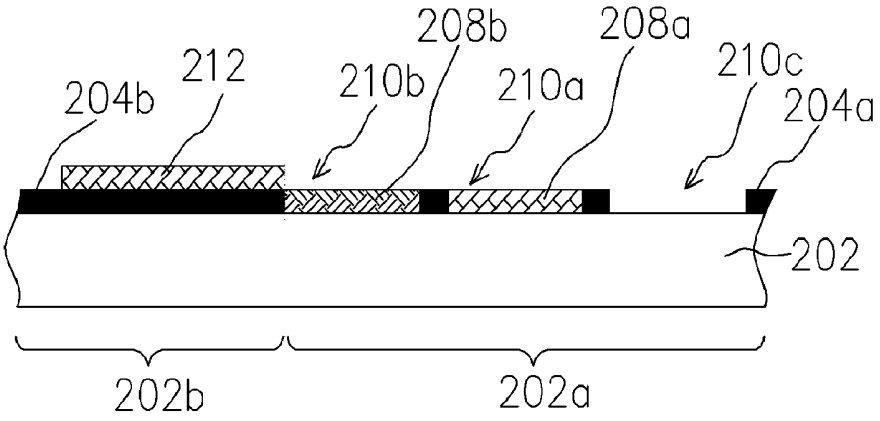

FIG. 2D

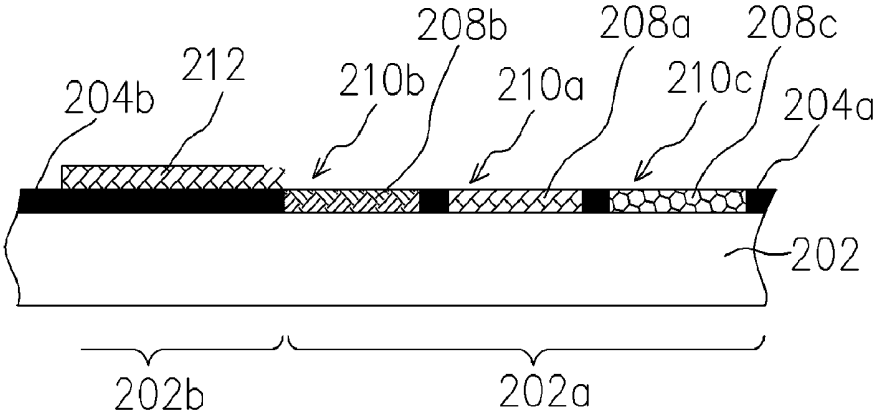

FIG. 2E

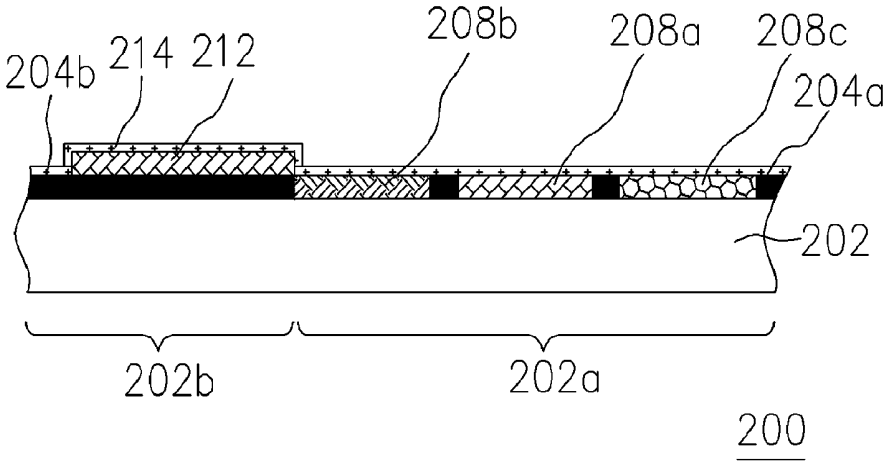

FIG. 2F

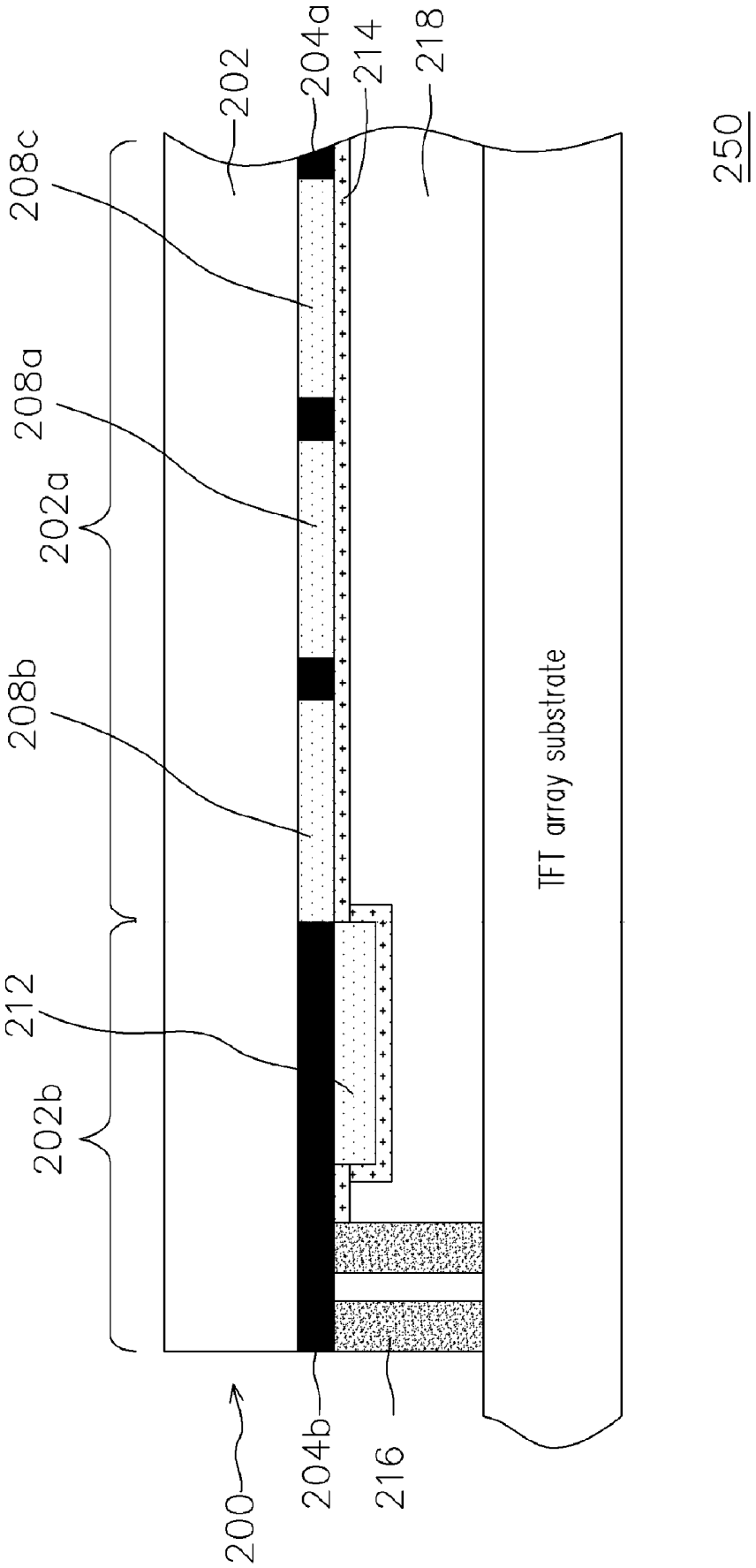
202
204a
214
218
250
208c
208a
202a
208b
212
202b
TFT array substrate
200
204b
216

FIG. 3

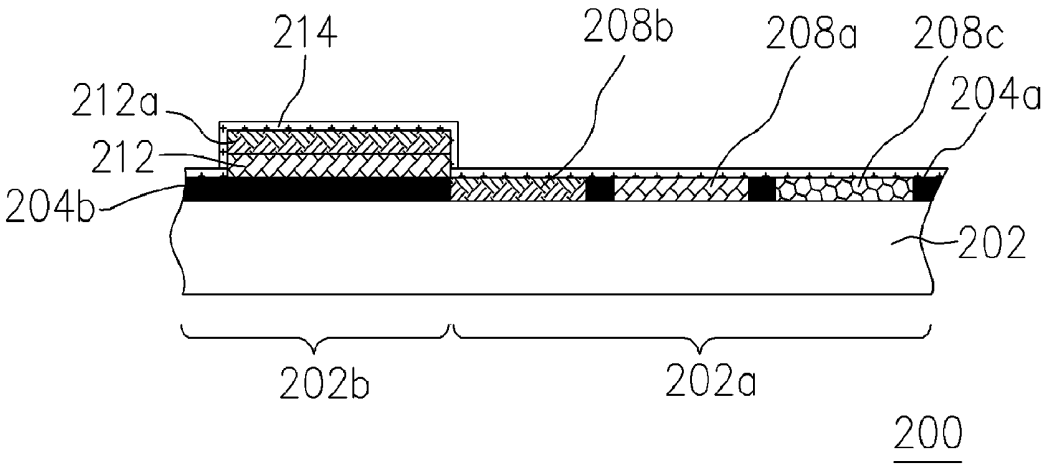
214
208b
208a
208c
212a
204a
212
204b
202
202b
202a
200

FIG. 4

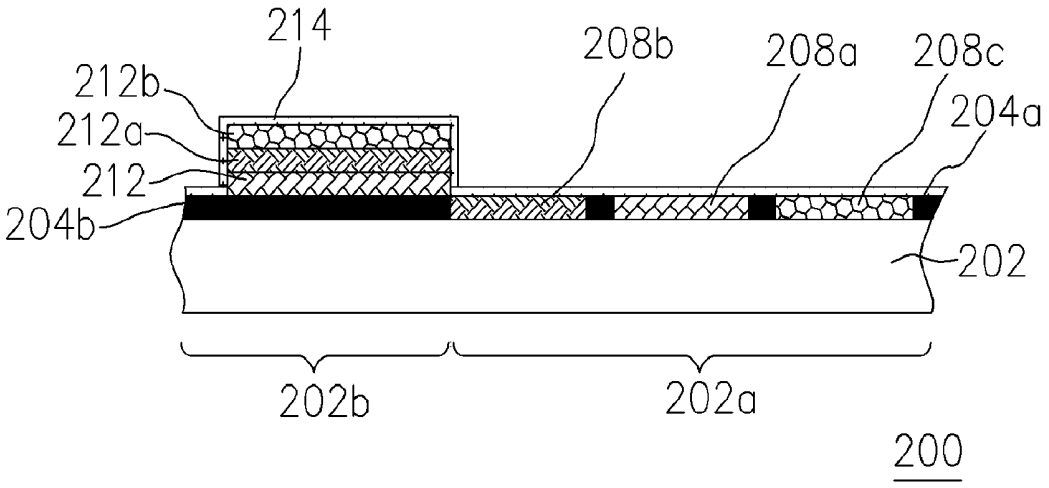
214
208b
208a
208c
212b
212a
204a
212
204b
202
202b
202a
200

FIG. 5

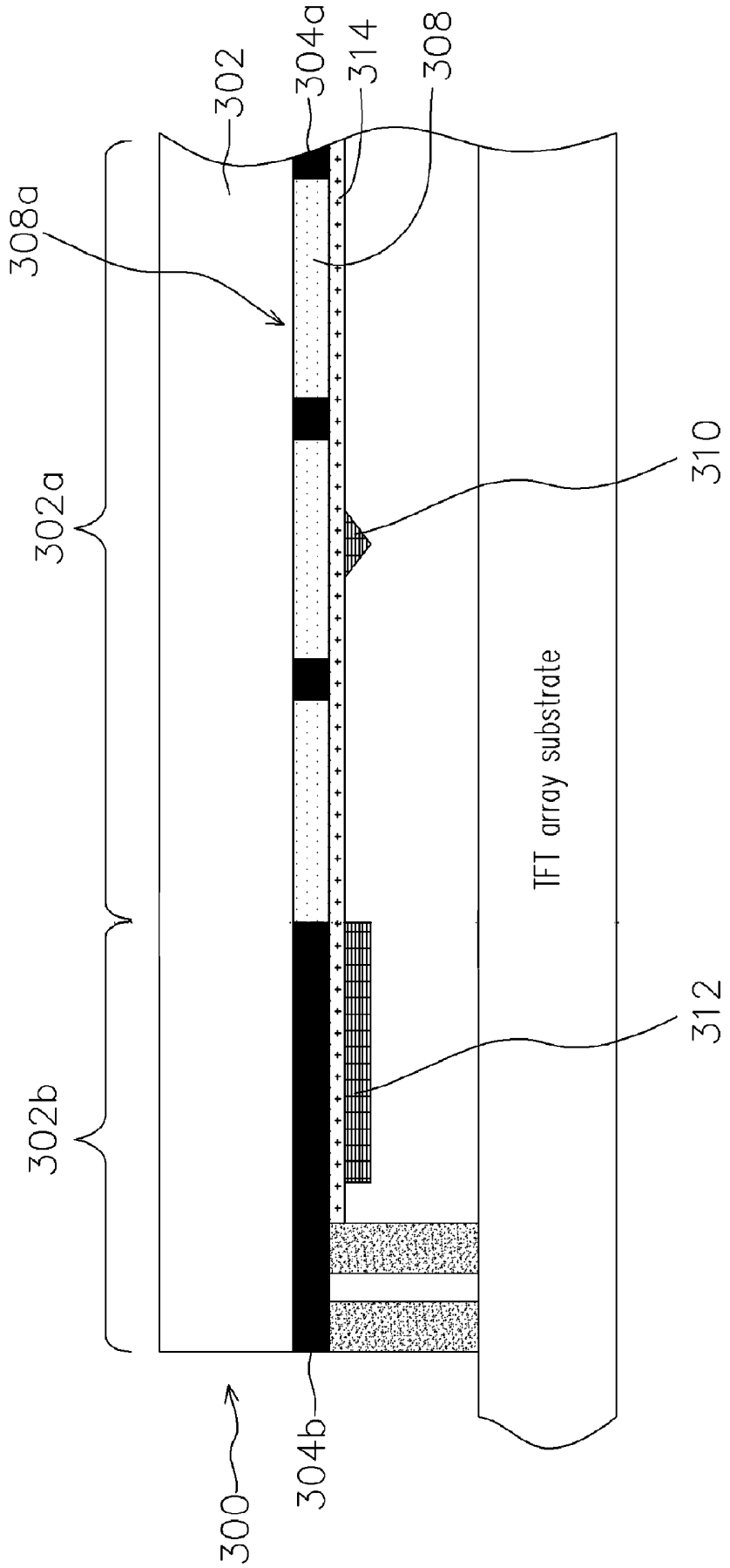
300
302
302a
302b
304a
304b
308
308a
310
312
314
TFT array substrate

FIG. 6

LIQUID CRYSTAL DISPLAY PANEL AND MANUFACTURING METHOD OF COLOR FILTER AND LIQUID CRYSTAL DISPLAY PANEL

CROSS REFERENCE TO RELATED APPLICATIONS

This application claims the priority benefit of Taiwan application serial no. 92136978, filed Dec. 26, 2003.

BACKGROUND OF INVENTION

1. Field of the Invention

The present invention generally relates to a color filter and the manufacturing method thereof. More particularly, the present invention relates to a color filter comprising a light shielding layer formed on the black matrix of the non-display area for avoiding the light leakage from the edge area of the display and the manufacturing method thereof.

2. Description of the Related Art

As the development of the performance of computer, internet, and multimedia technology, the transformation of image information has gradually progressed from analog transformation to digital transformation. In recently years, the size and weight of many electronic device has become thin and light. As to a display device, although the conventional cathode ray tube (CRT) display is widely used, however, it has the disadvantages of large size, high radiation, heavy weight and high power consumption. Therefore, the flat panel display (FPD) is being developed having the advantages of thinner, flatter, lighter, radiation free and low power consumption, and has gradually become the mainstream of display devices. The flat panel display (FPD) including, for example, liquid crystal display (LCD), organic light emitting display (OLED)or plasma display panel (PDP).

In recent year, the liquid crystal display (LCD) is developed for the application of full-color, larger display area, higher resolution and low-cost. The color display of the liquid crystal display (LCD) is generally performed by color filters. The color filter is generally constructed over a transparent glass substrate, wherein a black matrix for light shielding, and color filter units such as red filter unit, green filter unit and blue filter unit arranged corresponding to each sub-pixel, are disposed over the transparent glass substrate. The structure of color filter will be described in detail hereinafter.

FIG. **1** is a cross-sectional view schematically illustrating the structure of a conventional color filter. Referring to FIG. **1** a color filter **100** includes a substrate **102**, black matrices **104***a* and **104***b*, a plurality of color filter unit **106** and a common electrode **108**. The substrate **102** includes a display area **102***a* in the center of the substrate **102** and a non-display area **102***b* surrounding the edge of the display area **102***a*. The black matrices **104***a* and **104***b* are disposed on the surface of the substrate **102**, wherein a plurality of sub-pixel area **110** are defined by the black matrix **104***a* in the display area **102***a*, and the black matrix **104***b* covers the non-display area **102***b* that adjacent to the edge of the display area **102***a*. Furthermore, the color filter unit **106** is composed of a plurality of photoresists that have different colors respectively(for example, a red photoresist, a green photoresist and a blue photoresist). Each color of photoresist is disposed in the corresponding sub-pixel area **110** defined by the black matrix **104** by performing conventional photolithography, etching and developing process. Further, a common electrode **108** is further formed on the surfaces of the black matrices **104***a*, **104***b* and the color filter unit **106**.

Next, referring to FIG. **1**, a variety of color lights are generated by performing a white light through the color filter unit **106**, wherein the black matrix **104***a* of the display area **102***a* is provided for separating the different light colors. Therefore, contrast between different light colors and the purity of each color are enhanced. Furthermore, the black matrix **104***b* covering the non-display area **102***b* adjacent to the edge of the display area **102***a* is provided for preventing the leakage of light from the non-display area **102***b* in order to enhance the image quality of the liquid crystal display (LCD).

In conventional art, the material of the black matrix generally includes chromium metal. However, use of chromium metal the black matrix is an environmental concern, and therefore some proposed to replace the chromium metal by a black resin. It is noted that, because of the light shielding effect provided by the black resin is poor compared to the chromium metal, a portion of lights will still leak out from the non-display area. Thus, the light leakage from the edge of the display area is still a problem for the color filter.

SUMMARY OF INVENTION

Accordingly, to the present invention provides a color filter capable of reducing light leakage from the edge of the display area.

The present invention also provides a method of fabricating the color filter mentioned above. A substrate having a display area and a non-display area formed thereon is provided. A black matrix is formed over the substrate, wherein the black matrix defines the display area into a plurality of first sub-pixel areas, a plurality of second sub-pixel areas and a plurality of third sub-pixel areas. The black matrix covers the non-display area, which forms an edge of the display area edge. Next, a first color filter unit is formed in each first sub-pixel area, and a first light shielding layer is formed over the black matrix of the non-display area simultaneously. Thereafter, at least a second color filter unit and at least a third color filter unit is correspondingly formed in each second sub-pixel area and each third sub-pixel area respectively.

Furthermore, a second light shielding layer is optionally formed over the first light shielding layer. Furthermore, a third light shielding layer is further optionally formed over the second light shielding layer. Moreover, when the color filter is provided for multi-domain vertical alignment (MVA) liquid crystal display panel, a plurality of alignment bumps are further formed over the black matrix, the first color filter unit, the second color filter unit and the third color filter unit.

The present invention provides a method of forming a color filter for multi-domain vertical alignment (MVA)liquid crystal display panel. A substrate having a display area and a non-display area formed thereon is provided. A black matrix is formed over the substrate, wherein the black matrix defines the display area into a plurality of first sub-pixel areas, a plurality of second sub-pixel areas and a plurality of third sub-pixel areas. The black matrix covers the non-display area, which forms an edge of the display area edge. Then, a first color filter unit, a second color filter unit and a third color filter unit are respectively formed in the first sub-pixel areas, the second sub-pixel areas and the third sub-pixel areas. Thus, a plurality of alignment bumps are formed over the black matrix, the first color filter unit, the second color filter unit and the third color filter unit. Next,

a first light shielding layer is formed over the black matrix of the non-display area, which forms an edge of the display area.

Further, in the color filter described above, a second light shielding layer may be disposed between the black matrix and the first light shielding layer.

Furthermore, in the color filter described above, a third light shielding layer may be disposed between the second color filter unit and the first light shielding layer.

Furthermore, in the color filter described above, a fourth light shielding layer may be disposed between the third color filter unit and the first light shielding layer.

The color filter of the present invention comprises a substrate, a black matrix, a plurality of color filter units and a light shielding layer. The substrate comprises a display area and a non-display area. The black matrix is disposed over the substrate, and the material of the black matrix includes, for example but not limited to, black resin. The black matrix defines the display area into a plurality of sub-pixel areas and covers the non-display area that forms an edge of the display area. Furthermore, the color filter unit is disposed in the sub-pixel area, and the light shielding layer is disposed over the black matrix.

Furthermore, the color filter unit comprises, for example but not limited to, a plurality of red photoresist units, a plurality of green photoresist units and a plurality of blue photoresist units. The light shielding layer is formed together with the color filter unit. Accordingly, the light shielding layer may be comprised of a single layer or a multi-layer structure. The light shielding layer comprises, for example but not limited to, red photoresist, green photoresist or blue photoresist, or a combination thereof. Furthermore, the color filter of the present invention may also be provided for a multi-domain vertical alignment (MVA) liquid crystal display panel, wherein a plurality of alignment bumps are disposed over, for example but not limited to, the color filter unit and the black matrix. The light shielding layer may be formed together with the alignment bump. Further, the light shielding layer may be comprised of color photoresists or the material of the alignment bump.

In summary, the color filter of the present invention provides a light shielding layer over the black matrix of the non-display area to seal the edge of the display area. Therefore, the light leakage from the edge of the display area can be reduced. It is to be noted that, in the manufacturing method of the color filter of the present invention, only the design of the mask of the color photoresist or alignment bump are required to be modified, however the manufacturing process and the materials need not changed.

It is to be understood that both the foregoing general description and the following detailed description are exemplary, and are intended to provide further explanation of the invention as claimed.

BRIEF DESCRIPTION OF DRAWINGS

The accompanying drawings are included to provide a further understanding of the invention, and are incorporated in and constitute a part of this specification. The following drawings illustrate embodiments of the invention and, together with the description, serve to explain the principles of the invention.

FIG. **1** is a cross-sectional view schematically illustrating the structure of a conventional color filter.

FIG. **2**A to FIG. **2**F are cross-sectional views schematically illustrating a process of forming a color filter according to an embodiment of the present invention.

FIG. **3** is a cross-sectional view schematically illustrating a structure of a color filter shown in FIG. **2**.

FIG. **4** is a cross-sectional view schematically illustrating a color filter having double light shielding layers according to an embodiment of the present invention.

FIG. **5** is a cross-sectional view schematically illustrating a color filter having double light shielding layers according to another embodiment of the present invention.

FIG. **6** is a cross-sectional view schematically illustrating a liquid crystal display panel having a multi-domain vertical alignment (MVA) structure according to an embodiment of the present invention.

DETAILED DESCRIPTION

The present invention will now be described more fully hereinafter with reference to the accompanying drawings, in which preferred embodiments of the invention are shown. This invention may, however, be embodied in many different forms and should not be construed as limited to the embodiments set forth herein; rather, these embodiments are provided so that this disclosure will be thorough and complete, and will fully convey the scope of the invention to those skilled in the art. Like numbers refer to like elements throughout.

FIG. **2**A to FIG. **2**F are cross-sectional views schematically illustrating a process of forming a color filter according to an embodiment of the present invention. Referring to FIG. **2**A, a substrate **202** is provided. The substrate includes, for example but not limited to, a transparent substrate comprised of a glass or a plastic material. Moreover, the substrate **202** is defined into a display area **202***a* and a non-display area **202***b*, wherein the non-display area **202***b* surrounds the display area **202***a*. Next, referring to FIG. **2**B, a patterned black matrix layer is formed over the substrate, wherein portions of the patterned black matrix **204***a* are formed over the display area **202***a* and a portion of the patterned black matrix **204***b* is formed over the non-display area **202***b*. The patterned black matrix layer comprises a non-transparent material including, for example but not limited to, black resin. The patterned black matrix can be formed by performing conventional photolithography, etching and developing process. The portions of patterned black matrix **204***a* defines the display area **202***a* into a plurality of first sub-pixel areas **210***a*, a plurality of second sub-pixel areas **210***b* and a plurality of third sub-pixel areas **210***c*. The portion of patterned black matrix layer **204***b* covers the non-display area **202***b* and forms an edge of the display area **202***a*.

Next, referring to FIG. **2**C, a first color filter unit **208***a* is formed in the first sub-pixel areas **210***a*. For example, a first color photoresist layer is formed over the substrate **203** and then a conventional photolithography, etching and developing process may be performed over the first color photoresist layer to form the first color filter unit **208***a*. At the same time, a light shielding layer **212** is formed on the portion of the patterned black matrix **204***b* over the non-display area **202***b*.

Next, referring to FIG. **2**D, a second color filter unit **208***b* is formed in the second sub-pixel areas **210***b*. For example, a second color photoresist layer is formed over the substrate **202** and then a conventional photolithography, etching and developing process may be performed over the second color photoresist layer to form the second color filter unit **208***b*.

Thereafter, referring to FIG. **2**E, a third color filter unit **208***c* is formed in the third sub-pixel areas **210***c*. For example, a third color photoresist is formed over the substrate **202** and then a conventional photolithography, etching

and developing process may be performed over the third color photoresist layer to form the third color filter unit **208***c*.

Finally, referring to FIG. **2**F, a common electrode **214** is formed over the substrate **202**. The common electrode **214** covers the portions of the patterned black matrix **204***a*, portion of the patterned black matrix **204***b*, the light shielding layer **212**, the first color filter unit **208***a*, the second color filter unit **208***b* and the third color filter unit **208***c*.

FIG. **3** is a cross-sectional view schematically illustrating a structure of a color filter shown in FIG. **2**. Referring to FIG. **3**, a liquid crystal display panel **250** is formed by, for example but not limited to, performing the steps of disposing the glue **216** on the substrate, compressing the substrate and then injection the liquid crystal **218** into the color filter **200**. Accordingly, the polarization direction of the white light entering the thin film transistor (TFT) array substrate is changed by the liquid crystal layer **218**. Then the white light is filtered by the first color filter unit **208***a*, the second color filter unit **208***b* and the third color filter unit **208***c* respectively, thus a variety of color lights are generated. Because a light shielding layer **212** is formed over the black matrix **204***b* of the non-display area **202***b*, the light shielding capability of the non-display area **202***b* is improved, and the light leakage via the edge of the display area **202***a* is reduced.

In an embodiment of the present invention, a light shielding layer of the color filter is formed over the black matrix of the non-display area, which forms an edge of the display area, therefore the transparency of the non-display area to light is also reduced. In another embodiment of the present invention, the light shielding layer can be formed together with any color filter unit. In an embodiment of the invention, for example, if the filter units of the color filter is formed using a red filter unit, a green filter unit and a blue filter unit, the light shielding layer may be formed, for example but not limited to, together with the blue filter unit, by using a blue photoresist layer.

FIG. **4** is a cross-sectional view schematically illustrating a color filter having double light shielding layers according to an embodiment of the present invention. In the invention, except for providing a color filter having alight shielding layer formed from the blue filter unit, a color filter having a double light shielding layer shown in FIG. **4** can also be provided. As show in FIG. **4**, a first light shielding layer **212** is formed before the first color (red)filter unit **208***a* is formed. Thereafter, when the second color (blue)filter unit **208***b* is formed, a second light shielding layer **212***a* is formed over the first light shielding layer **212**. Thus, the light shielding layer has a double layer structure comprising red photoresist and blue photoresist layers.

FIG. **5** is a cross-sectional view schematically illustrating a color filter having double light shielding layers according to another embodiment of the present invention. Moreover, as shown in FIG. **5**, when the third color (green)filter unit **208***c* is formed, a third light shielding layer **212***b* is formed over the second light shielding layer **212***a*. Thus, the light shielding layer has a triple layer structure comprising red, blue and green photoresist layers. The light shielding layer is comprised of, for example but not limited to, the combination of red, green or blue photoresist layers (for example, a combination of red photoresist/blue photoresist or red photoresist/green photoresist/blue photoresist). The sequence of the photoresist in the combination may be dependent on the manufacturing process of the color filter unit or the design of the mask.

In another embodiment of the present invention, the color filter and the manufacturing method of the invention can be provided for any type of liquid crystal display panel, for example but not limited to, a multi-domain vertical alignment (MVA) liquid crystal display panel. FIG. **6** is a cross-sectional view schematically illustrating a liquid crystal display panel having a multi-domain vertical alignment (MVA) structure according to an embodiment of the present invention. The color filter **300** comprises, for example but not limited to, a substrate **302**, black matrices **304***a* and **304***b*, a plurality of color filter units **308**, a plurality of alignment bumps **310**, a light shielding layer **312** and a common electrode **314**. The substrate **302** comprises a display area **302***a* and a non-display area **302***b*, wherein the black matrices **304***a* and **304***a* are disposed over the substrate **302**. The material of the black matrices **304***a* and **304***a* includes, for example but not limited to, a black resin. The black matrix **304***a* defines a plurality of sub-pixel area **308***a* in the display area **302***a*, and the black matrix **304***b* covers non-display area **302***b*, which forms the edge of the display area **302***a*.

Next, referring to FIG. **6**, the color filter units **308** are disposed in the sub-pixel area **308***a* respectively, and are formed, for example but not limited to, by a variety of photoresist layers having different colors (such as red photoresist, green photoresist or blue photoresist) using exposing and developing process. Furthermore, the alignment bump **310** is disposed over the common electrode **314** and in the display area **302***a*, and is formed, for example but not limited to, by performing photolithography process including masking, exposing and developing process on a photosensitive material. Moreover, as shown in FIG. **6**, the light shielding layer **312** of the color filter **300** is formed with the alignment bump **310***a*, and the light shielding layer **312** is disposed over the common electrode **314** and in the non-display area **302***b* adjacent to the edge of the display area **302***a*.

It is noted that, except for forming the light shielding layer described above with the alignment bump, a plurality of color photoresist layers can also be formed according to the previous embodiments.

Accordingly, the color filter and the manufacturing method thereof of the present invention can improve the problem of light leakage from the edge of the display area when the black matrix is made of black resin. It is noted that in an exemplary embodiment of the present invention, the color filter composed of blue photoresist layer has a better light shielding effect than that of red photoresist layer, and whereas the color filter composed of green photoresist layer has a worse light shielding effect. Furthermore, when the color filter is provided for a multi-domain vertical alignment (MVA) liquid crystal display panel, the light shielding layer can be formed with the alignment bump. Moreover, if the light shielding layer is provided together with the color photoresist layer described above, a variety of materials may be provided for forming the light shielding layer. Furthermore, in the manufacture of the color filter of the present invention, only the design of the mask is modified, but the process or and the material used in the manufacture remain same. Therefore, the light leakage problem can be effectively reduced and also the process is simplified.

It will be apparent to those skilled in the art that various modifications and variations can be made to the structure of the present invention without departing from the scope or spirit of the invention. In view of the foregoing, it is intended that the present invention cover modifications and variations of this invention provided they fall within the scope of the following claims and their equivalents.

The invention claimed is:

1. A process of forming a color filter, suitable for a multi-domain vertical alignment (MVA) liquid crystal display panel, the process comprising:

providing a substrate comprising a display area and a non-display area;

forming a black matrix oyer the substrate, wherein the black matrix defines the display area into a plurality of first sub-pixel areas, a plurality of second sub-pixel areas and a plurality of third sub-pixel areas, and the black matrix covers the non-display area, which forms an edge of the display area;

forming a first color filter unit in each of the first sub-pixel areas;

forming a second color filter unit in each of the second sub-pixel areas;

forming a third color filter unit in each of the third sub-pixel areas;

forming a plurality of alignment bumps over the black matrix, the first color filter unit, the second color filter unit and the third color filter unit; and

simultaneously forming a first light shielding layer over the black matrix during the formation of the alignment bumps.

2. The process of claim 1, further comprising:

forming a second light shielding layer over the black matrix as the first color filter unit is formed, wherein the first light shielding layer covers the second light shielding layer.

3. The process of claim 2, further comprising:

forming a third light shielding layer over the second light shielding layer as the second color filter unit is formed, wherein the first light shielding layer covers the third light shielding layer.

4. The manufacturing method of claim 3, further comprising:

forming a fourth light shielding layer over the third light shielding layer as the third color filter unit is formed, wherein the first light shielding layer covers the fourth light shielding layer.

* * * * *

专利名称(译)	液晶显示面板及滤色器和液晶显示面板的制造方法		
公开(公告)号	US7335450	公开(公告)日	2008-02-26
申请号	US10/709037	申请日	2004-04-08
[标]申请(专利权)人(译)	孙伟杰 赖明盛 胡RUNG广 范翔PIN		
申请(专利权)人(译)	太阳wei-chieh 赖明生 胡梯级广 樊祥-PIN		
当前申请(专利权)人(译)	友达光电股份有限公司		
[标]发明人	SUN WEI CHIEH LAI MING SHENG HU RUNG GUANG FAN HSIANG PIN		
发明人	SUN, WEI-CHIEH LAI, MING-SHENG HU, RUNG-GUANG FAN, HSIANG-PIN		
IPC分类号	G02F1/1335 G02B5/22 G02F1/1333		
CPC分类号	G02B5/22 G02F1/133514 G02F1/133512 G02F2001/133388		
审查员(译)	MCPHERSON , JOHN A.		
优先权	092136978 2003-12-26 TW		
其他公开文献	US20050147899A1		
外部链接	Espacenet USPTO		

摘要(译)
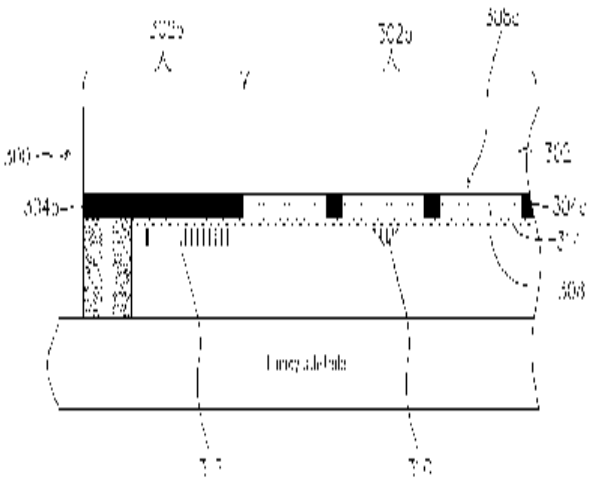
提供一种滤色器及其制造方法。在本发明的方法中，提供了具有显示区域和非显示区域的基板。此后，在基板上形成黑矩阵，其中黑矩阵将显示区域限定为多个子像素区域，并覆盖非显示区域，其形成显示区域的边缘。然后，在每个子像素区域中形成滤色器单元，并且同时在黑色矩阵上形成遮光层。因此，本发明提供的滤色器的屏蔽层能够有效地减少从显示区域边缘漏光。