US008054428B2

(12) **United States Patent**
Song et al.

(10) **Patent No.: US 8,054,428 B2**
(45) **Date of Patent: *Nov. 8, 2011**

(54) **LIQUID CRYSTAL DISPLAY HAVING OPENINGS IN THE PROTECTIVE LAYER AND GATE INSULATING LAYER AND METHOD FOR FABRICATING THE DISPLAY**

(75) Inventors: **Jang-Kun Song**, Seoul (KR); **Sang-Gab Kim**, Seoul (KR); **Seung-Hee Lee**, Chungcheongbuk-do (KR)

(73) Assignee: **Samsung Electronics Co., Ltd.**, Suwon-Si, Gyeonggi-Do (KR)

(*) Notice: Subject to any disclaimer, the term of this patent is extended or adjusted under 35 U.S.C. 154(b) by 0 days.

This patent is subject to a terminal disclaimer.

(21) Appl. No.: **12/329,356**

(22) Filed: **Dec. 5, 2008**

(65) **Prior Publication Data**

US 2009/0185116 A1 Jul. 23, 2009

Related U.S. Application Data

(63) Continuation of application No. 10/499,131, filed as application No. PCT/KR02/01390 on Jul. 24, 2002, now Pat. No. 7,463,321.

(30) **Foreign Application Priority Data**

Jan. 15, 2002 (KR) 2002-2229
May 9, 2002 (KR) 2002-25537

(51) **Int. Cl.**
G02F 1/1337 (2006.01)
G02F 1/136 (2006.01)

(52) **U.S. Cl.** **349/129**; 349/43; 349/114; 349/143; 349/146

(58) **Field of Classification Search** 349/129, 349/43, 114, 143, 146
See application file for complete search history.

(56) **References Cited**

U.S. PATENT DOCUMENTS

6,809,787 B1 * 10/2004 Seo et al. 349/129
2002/0176034 A1 * 11/2002 Lee 349/43

FOREIGN PATENT DOCUMENTS

JP	62-223723	10/1987
JP	05-158019	6/1993
JP	06-011733	1/1994
JP	07-175050	7/1995
JP	09-160019	6/1997
JP	10-073716	3/1998
JP	2001-027754	1/2001

(Continued)

OTHER PUBLICATIONS

English Abstract for Publication No. 62-223723.

(Continued)

Primary Examiner — David Nelms
Assistant Examiner — Nathanael R Briggs
(74) *Attorney, Agent, or Firm* — F. Chau & Associates, LLC

(57) **ABSTRACT**

The present invention relates to a liquid crystal display and a fabricating method thereof. The cell gaps for the red, green and blue pixel areas are formed in a separate manner for correcting the color shift to enhance image quality. Openings for controlling the cell gaps are provided in the protective layer and the gate insulating layer and have a zigzag-shaped boundary. In this way, the light leakage near the boundary of the openings can be prevented.

11 Claims, 12 Drawing Sheets

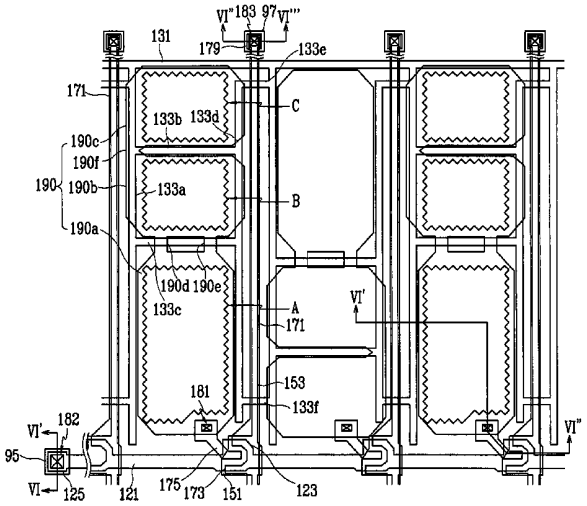

FOREIGN PATENT DOCUMENTS

JP	2001-109000			4/2001
JP	2002014333	A	*	1/2002
KR	09-080447			3/1997
KR	100357213			10/2002
KR	100357216			10/2002
KR	100654159			11/2006

OTHER PUBLICATIONS

English Abstract for Publication No. 10-073716.
English Abstract for Publication No. 06-011733.
English Abstract for Publication No. 100357213.
English Abstract for Publication No. 100357216.
English Abstract for Publication No. 100654159.
English Abstract for Publication No. 09080447.
English Abstract for Publication No. 07-175050.
English Abstract for Publication No. 05-158019.
English Abstract for Publication No. 2001-109000.
English Abstract for Publication No. 09-160019.
English Abstract for Publication No. 2001-027754.

* cited by examiner

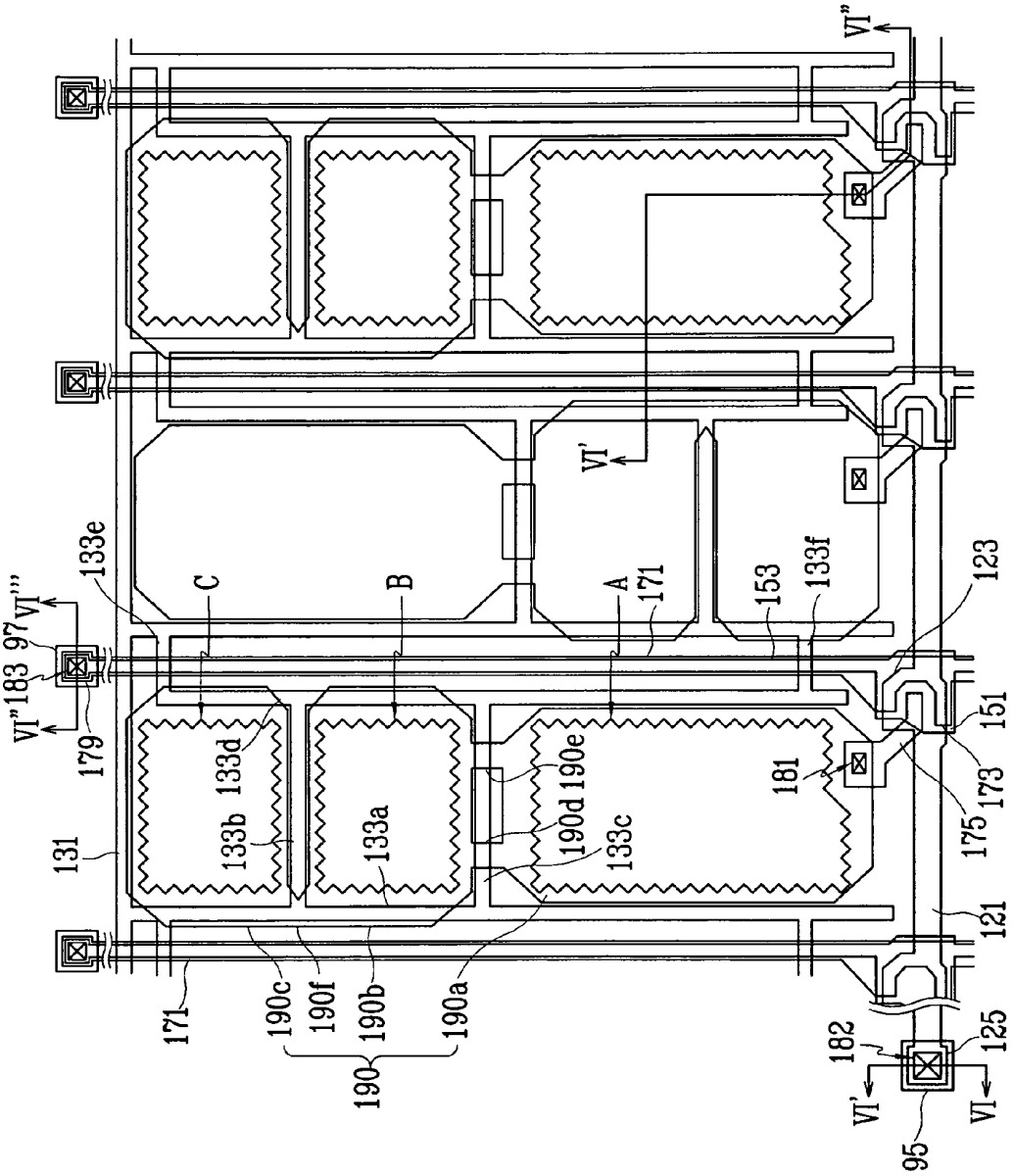
VI"
VI'
133e
C
B
A
171
153
133f
123
VI'''
97
183
VI"
179
133d
133b
133a
190d
190e
133c
181
151
173
175
131
121
171
190c
190f
190b
190a
190
182
125
VI'
VI
95

FIG.1

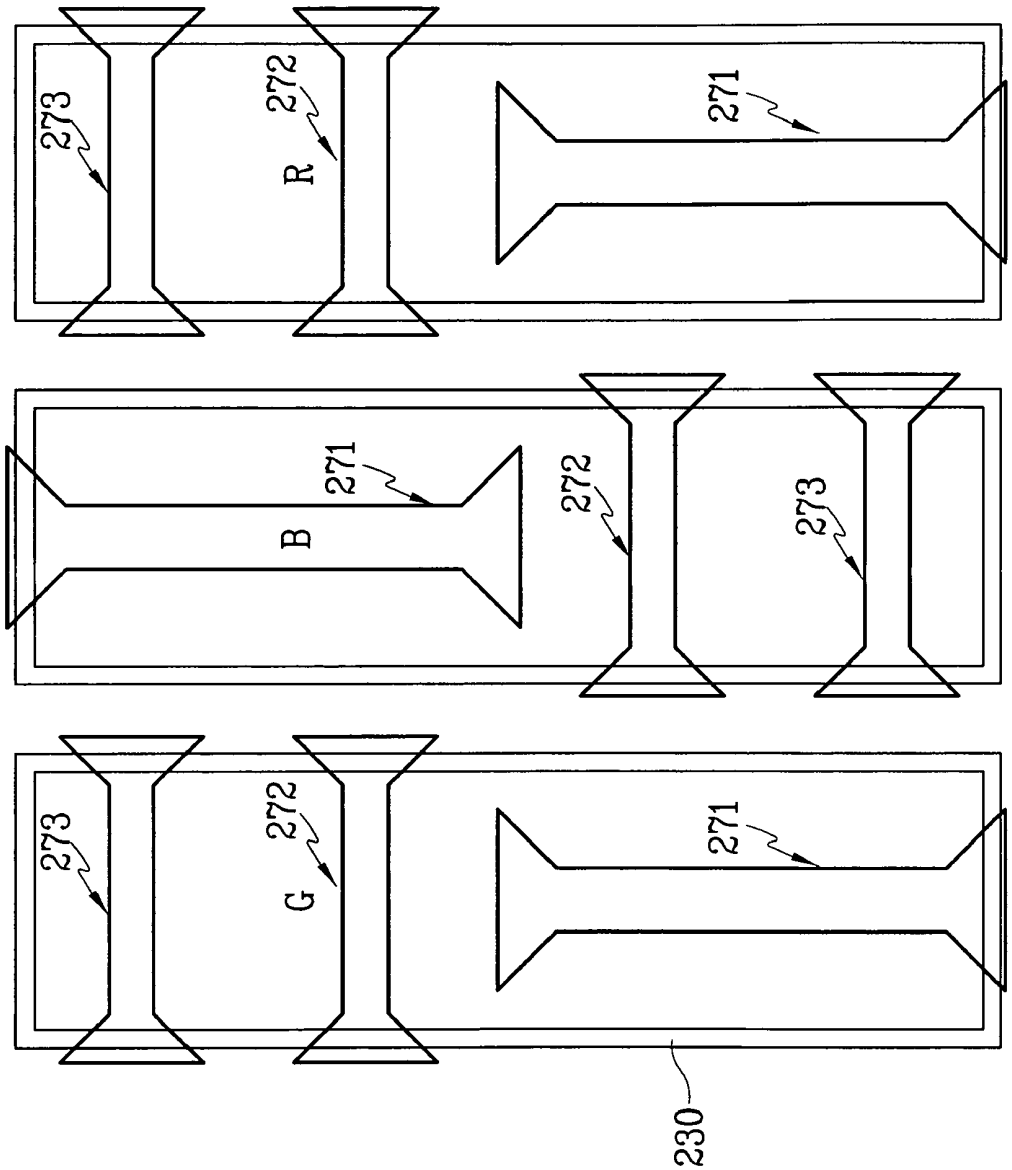

FIG.2

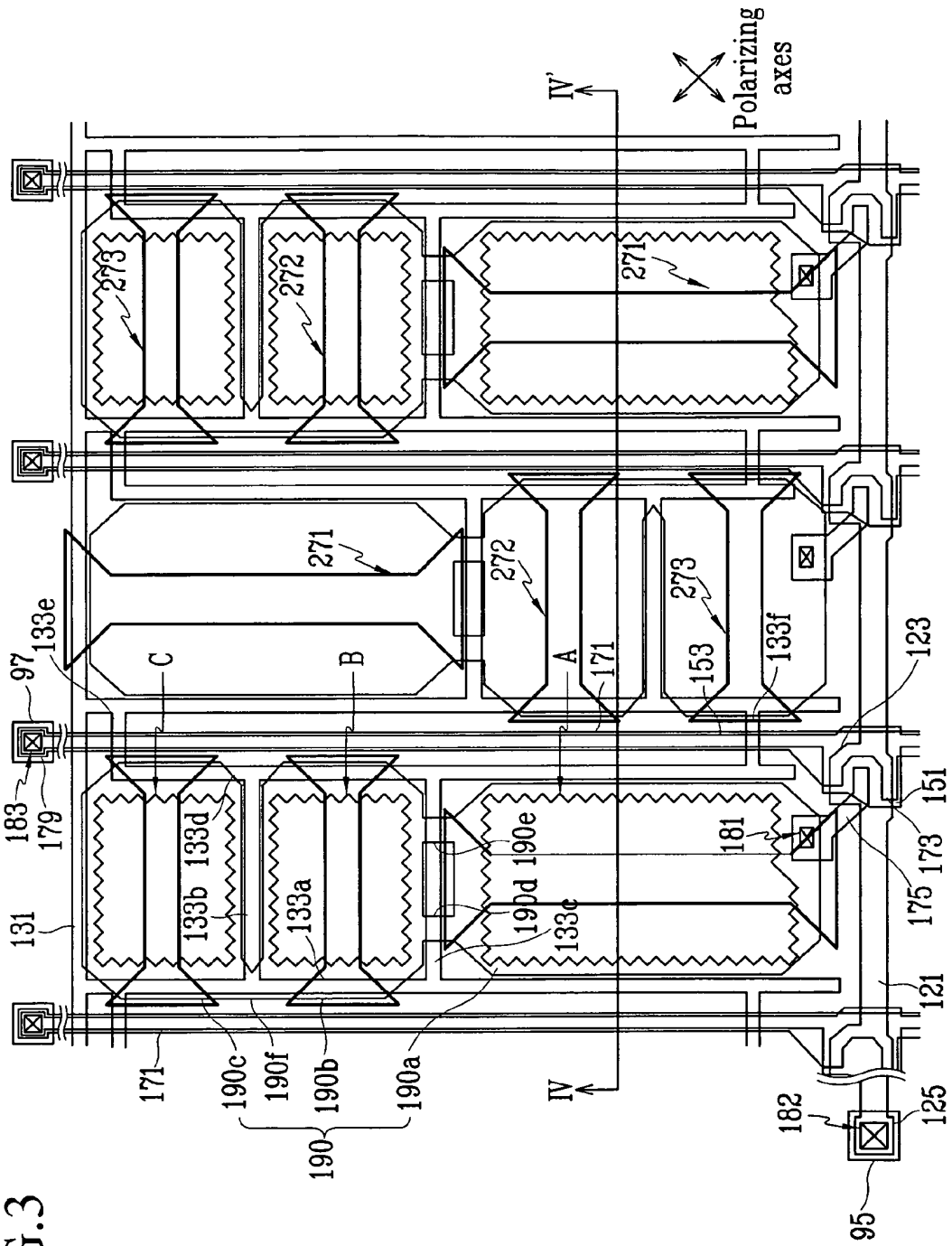
Polarizing axes
IV'
IV
271
272
273
133e
97
183
179
131
C
B
A
171
153
133f
123
151
173
175
121
125
95
182
181
133d
133b
133a
190e
190d
133c
190c
190f
190b
190a
190

FIG.3

FIG.4

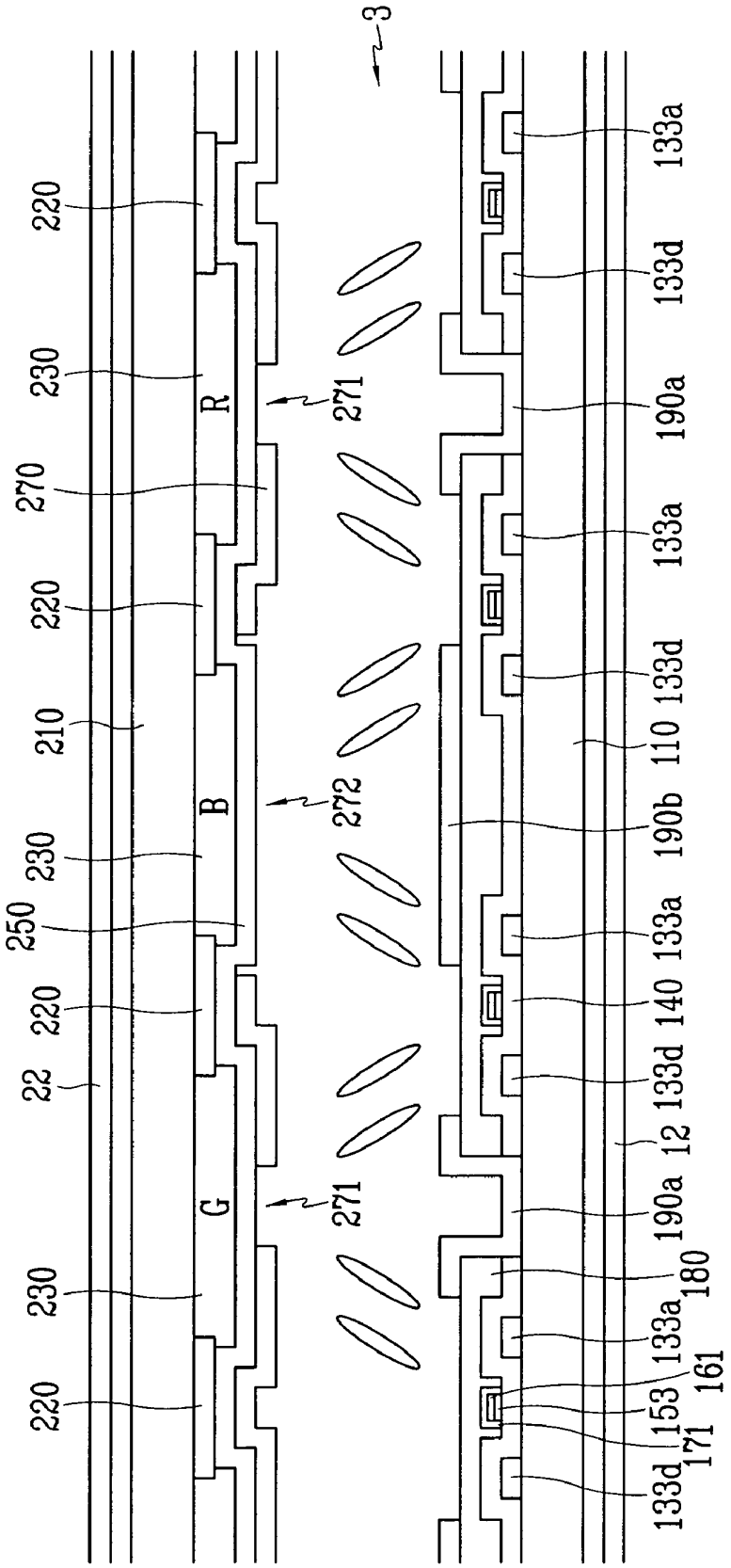
3
220
230
270
220
210
230
250
220
22
230
220
R
B
G
271
272
271
133a
133d
190a
133a
133d
110
190b
133a
140
133d
12
190a
180
133a
161
153
171
133d

FIG.5

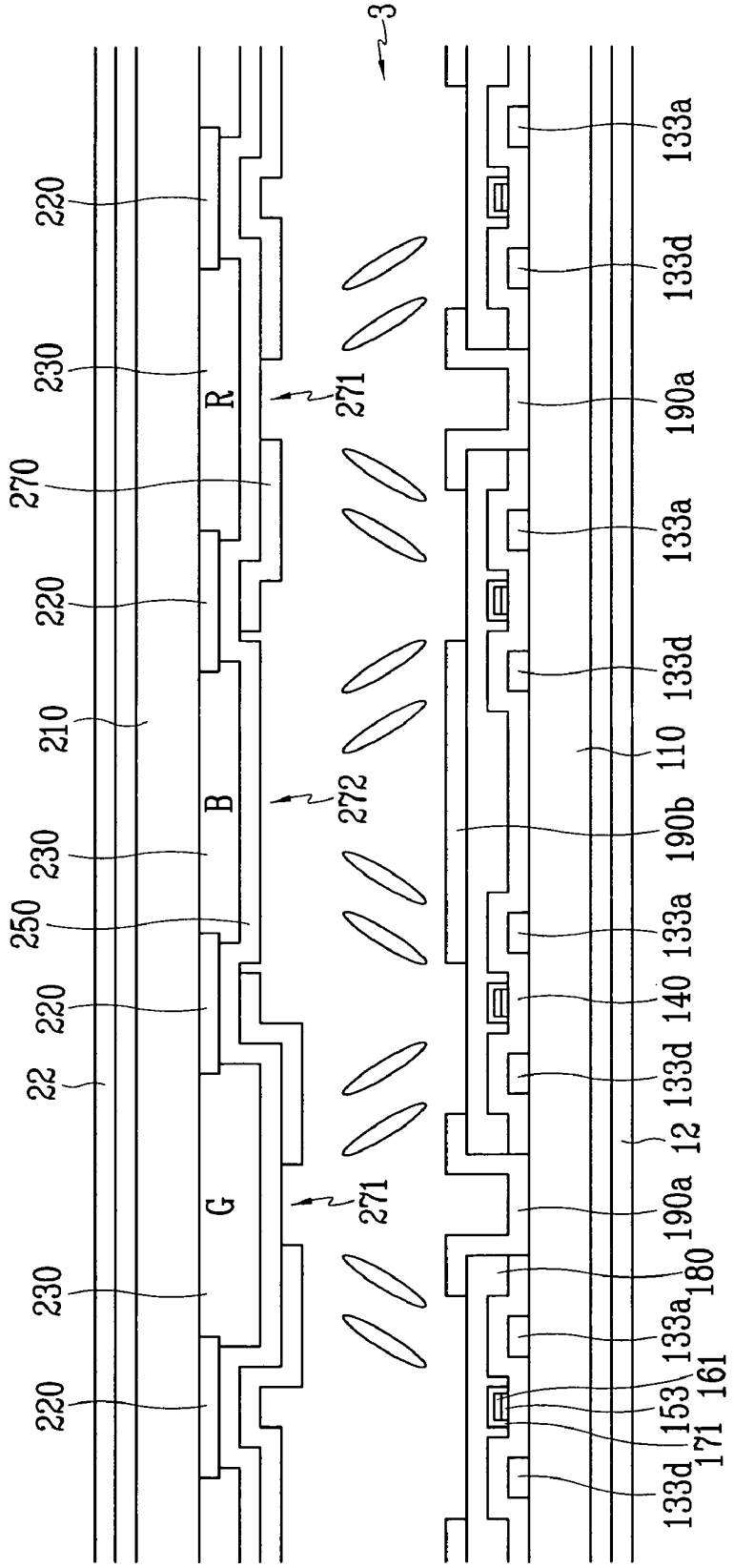
3
220
230
270
220
210
230
250
220
22
230
220
R
B
G
271
272
271
133a
133d
190a
133a
133d
110
190b
133a
140
133d
12
190a
180
133a
161
153
171
133d

FIG.6A

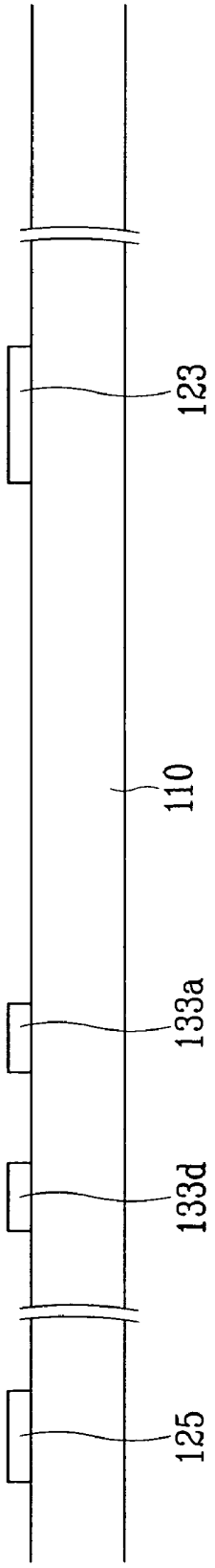

FIG.6B

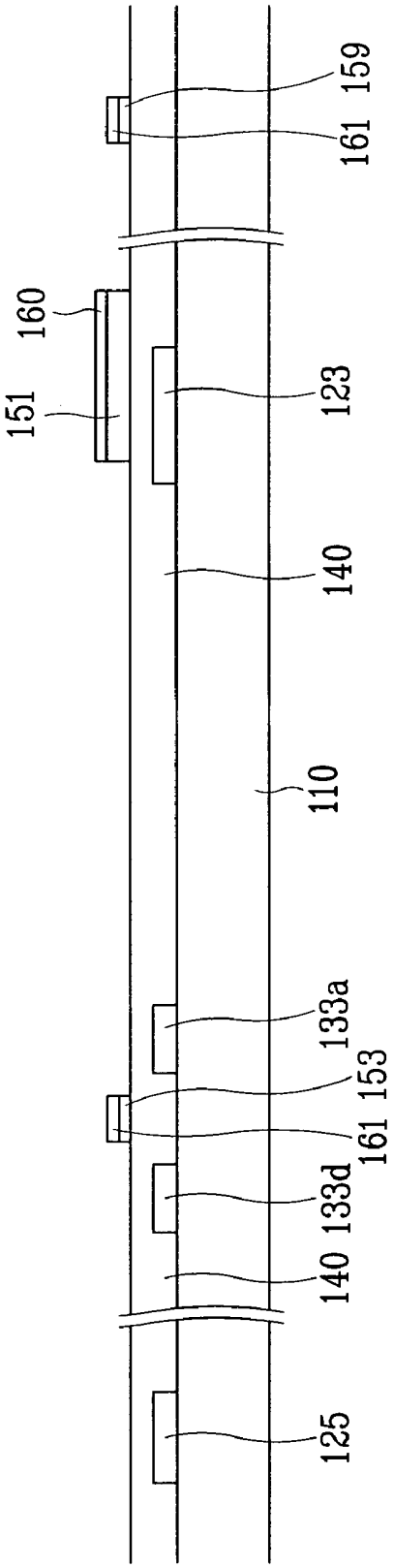

FIG.6C

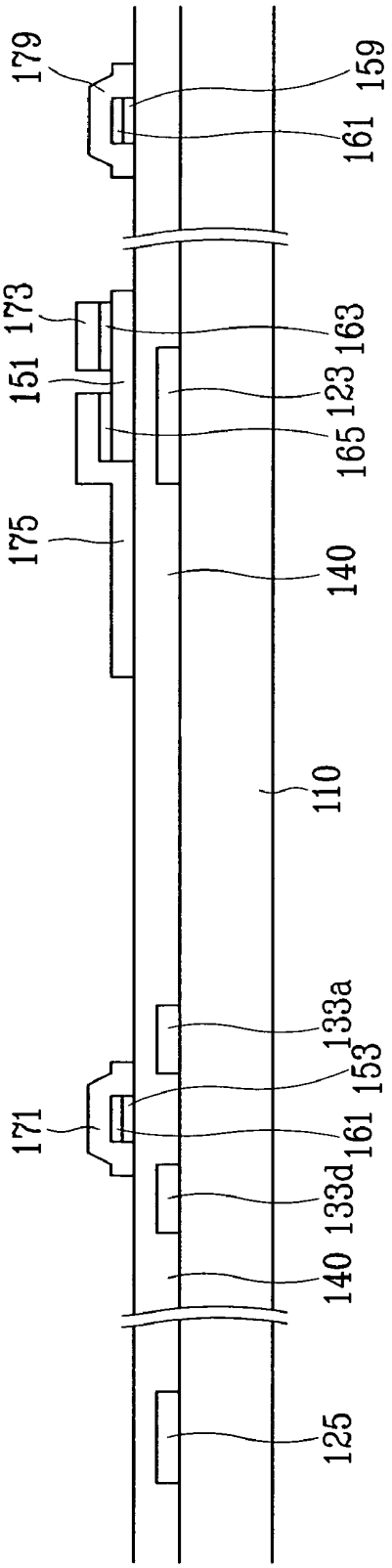
179
159
161
173
163
151
123
165
175
140
110
133a
153
171
161
133d
140
125

FIG.6D

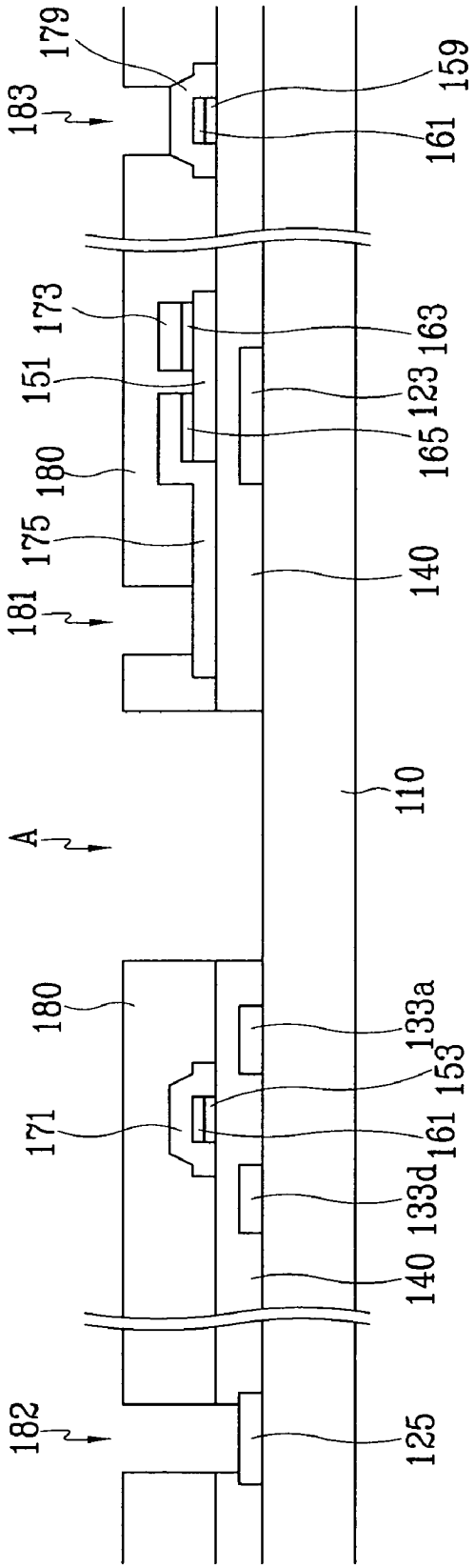
179
183
173
151
180
175
181
A
180
171
182
159
161
163
123
165
140
110
133a
153
161
133d
140
125

FIG.6E

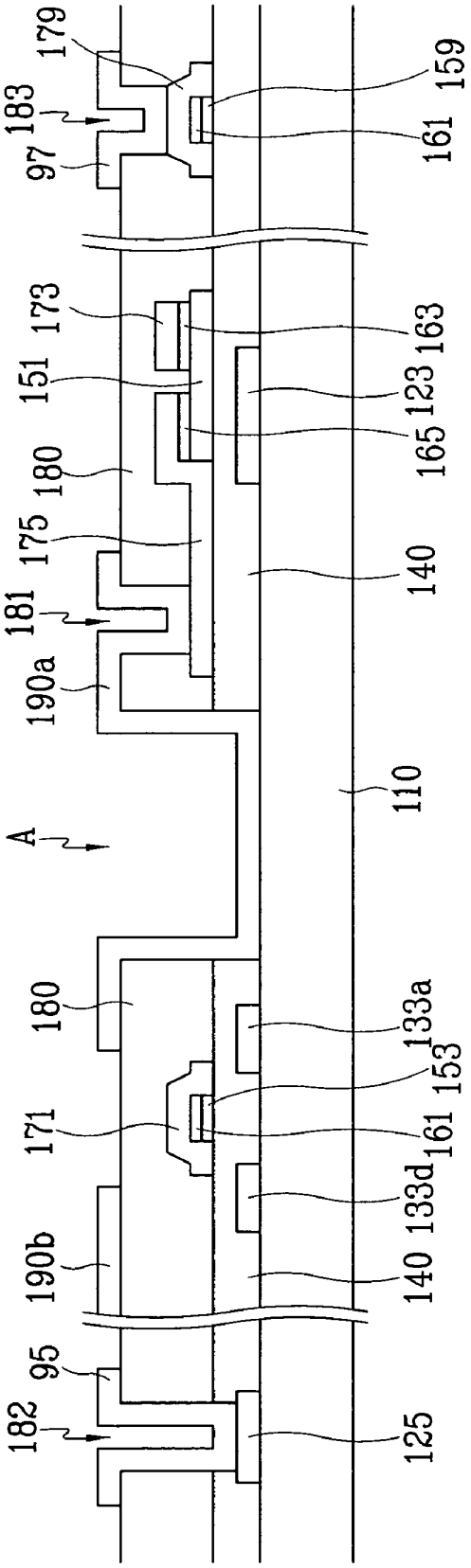
179
183
97
173
151
180
175
181
190a
A
180
171
190b
95
182
159
161
163
123
165
140
110
133a
153
161
133d
140
125

FIG.7

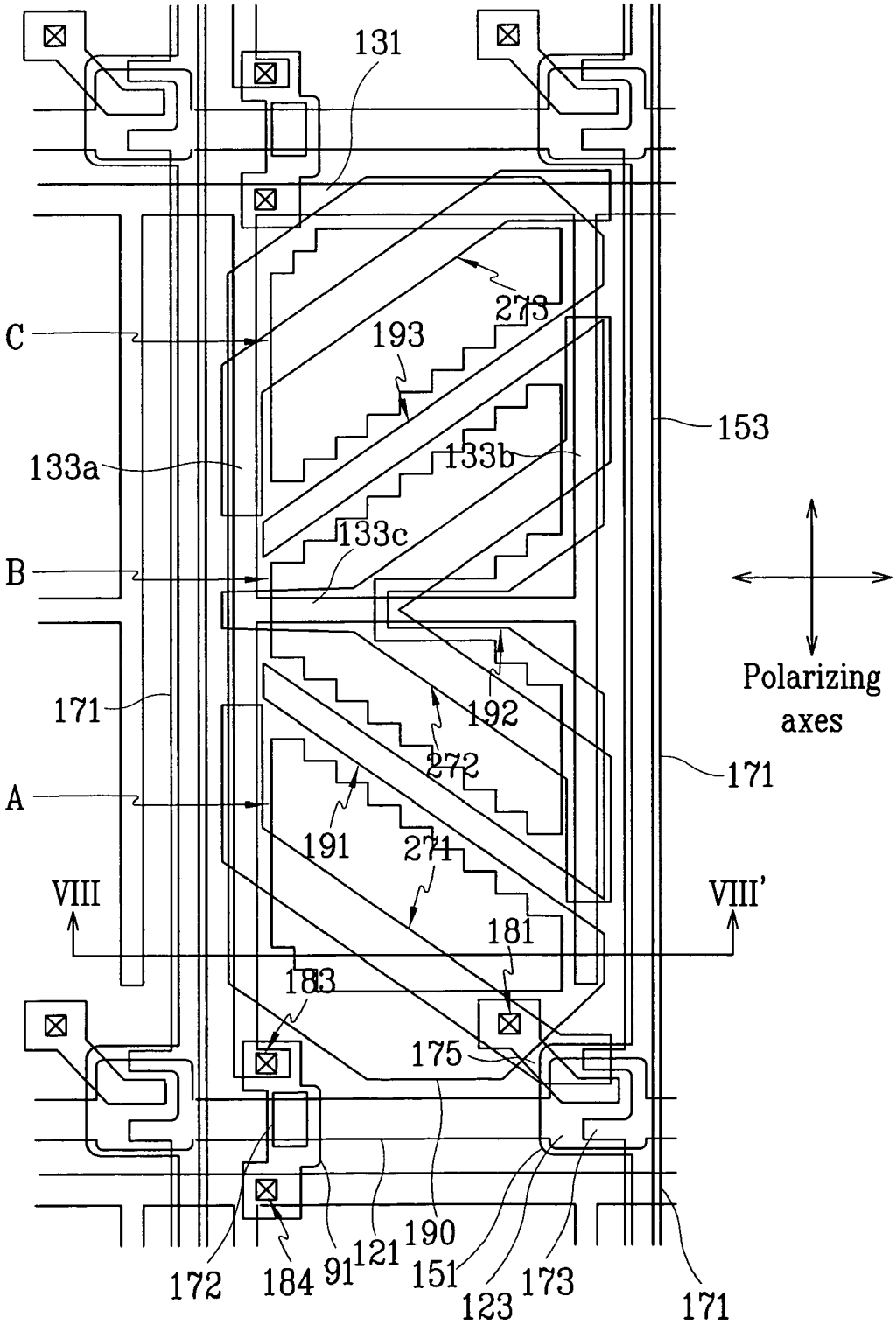
131
273
193
C
153
133a
133b
133c
B
Polarizing axes
171
192
272
171
A
191
271
VIII
VIII'
181
183
175
172
184
91
121
190
151
123
173
171

FIG.8

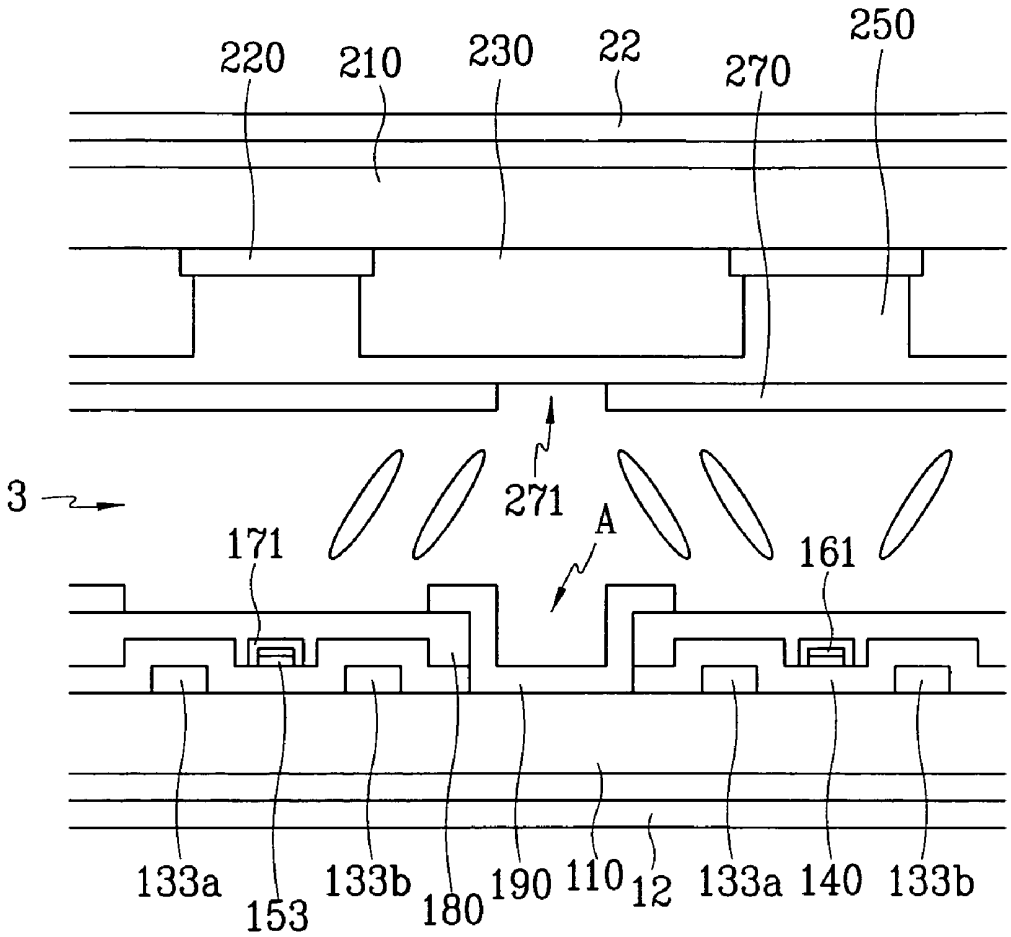
220
210
230
22
270
250
3
271
A
171
161
133a
153
133b
180
190
110
12
133a
140
133b

LIQUID CRYSTAL DISPLAY HAVING OPENINGS IN THE PROTECTIVE LAYER AND GATE INSULATING LAYER AND METHOD FOR FABRICATING THE DISPLAY

CROSS-REFERENCE TO RELATED APPLICATION

The present application is a continuation of U.S. patent application Ser. No. 10/499,131, filed Dec. 23, 2004 now U.S. Pat. No. 7,463,321, which is a National Stage filing under 35 U.S.C. §371 of International Patent Application PCT/KR02/01390, filed Jul. 24, 2002, which claims priority to Korean Patent Application No. 2002-2229, filed Jan. 15, 2002, and Korean Patent Application No. 2002-25537, filed May 9, 2002, the contents of which are herein incorporated by reference in their entirety.

BACKGROUND OF THE INVENTION

1. Technical Field

The present disclosure relates to a liquid crystal display and, more specifically, to a liquid crystal display having openings in the protective layer and gate insulating layer and a method for fabricating the same.

2. Discussion of Related Art

Generally, a liquid crystal display (LCD) has top and bottom panels with electrodes, and a liquid crystal material interposed between the two panels. Electric fields are applied to the liquid crystal material by means of the electrodes, and controlled in the strength to control the transmittance of light passing through the panels, thereby displaying the desired picture images.

Among the LCDs, has been now extensively used a display device having two panels respectively provided with a common electrode and a plurality of pixel electrode, and the panel with the pixel electrodes includes a plurality of thin film transistors (TFTs) for switching the voltage applied to the pixel electrodes.

In the LCD, the transmittance of blue light having short wavelength is high at low gray scales, while the transmittance of red and green lights becomes large as goes to higher gray compared with that of the blue light. Therefore, as it goes to higher gray, the component of yellow light, which is obtained by synthesizing red and green lights, becomes large to yield color shift such as so-called yellowish phenomenon and deterioration of image quality. Furthermore, the variation in the transmittance of lights with different wavelength depending on the viewing angle is not uniform. This also affects the color shift to deteriorate the image quality.

SUMMARY

It is a motivation of the present invention to enhance the image quality by correcting the color shift.

It is another motivation of the present invention to prevent increase in the light leakage due to the structural variation for the color shift correction.

These and other motivation may be realized by separately providing cell gaps for the red, green and blue pixel areas.

Specifically, a thin film transistor array panel for the liquid crystal display is provided, which includes a first insulating substrate; a plurality of gate lines formed on the first insulating substrate; a gate insulating layer covering the gate line; a plurality of data lines formed on the gate insulating layer and intersecting the gate lines to define first to third pixel areas; a plurality of thin film transistors electrically connected to the gate lines and the data lines; a protective layer covering the thin film transistors and the data lines and having a plurality of contact holes exposing a plurality of drain electrodes of the thin film transistors; and a plurality of pixel electrodes connected to the drain electrodes through the contact holes, wherein the protective layer and the gate insulating layer have openings in the first and the second pixel areas, and the openings overlap the pixel electrodes and have zigzag-shaped boundaries.

A portion of the gate insulating layer overlapping a semiconductor pattern may be thicker than other portions of the gate insulating layer. The pixel electrode may include a plurality of partitions by means of cutouts, and the openings may include a plurality of sub-portions overlapping the partitions of the pixel electrodes. The boundary of the opening may make angle of about zero degree, about 45 degrees, about 90 degrees and about 135 degrees with the gate lines.

A liquid crystal display including the thin film transistor array panel is provided, which includes a second insulating substrate facing the first insulating substrate; a black matrix formed on the second insulating substrate; red, green and blue color filters arranged in turn on the black matrix and the second insulating substrate and facing the first to the third pixel areas; and a common electrode covering the color filters.

One of the red, green and blue color filters may be thicker than the other color filters. The cell gaps D**1**, D**2** and D**3** in the first, the second and the third pixel areas may satisfy the relation, D**1**>D**2**>D**3**, or D**1**=D**2**>D**3**. An overcoat is formed between the common electrode and the color filters, and the common electrode may have a plurality of cutouts.

BRIEF DESCRIPTION OF THE DRAWINGS

A more complete appreciation of the present disclosure and many of the attendant aspects thereof will be readily obtained as the same becomes better understood by reference to the following detailed description when considered in connection with the accompanying drawings, wherein:

FIG. **1** is a layout view of a TFT array panel for a LCD according to a first embodiment of the present invention;

FIG. **2** is a layout view of a color filter array panel for the LCD according to the first embodiment;

FIG. **3** is a front layout view of cutouts of a pixel electrode and a common electrode of the LCD according to the first embodiment;

FIG. **4** is a sectional view of FIG. **3** taken along the line IV-IV';

FIG. **5** is a sectional view of an LCD according to a second embodiment of the present invention taken along the line corresponding to the line IV-IV' shown in FIG. **3**;

FIGS. **6**A to **6**E are sectional views of the TFT array panel for the LCD according to the first and the second embodiments taken along the lines corresponding to the lines VI-VI', VI'-VI" and VI"-VI'" shown in FIG. **1**, which sequentially illustrates the steps of fabricating the TFT array panel;

FIG. **7** is a layout view of a LCD according to a third embodiment of the present invention; and

FIG. **8** is a cross sectional view of the LCD shown in FIG. **7** taken along the line VIII-VIII'.

DETAILED DESCRIPTION OF THE DRAWINGS

In describing exemplary embodiments of the present disclosure illustrated in the drawings, specific terminology is employed for sake of clarity. However, the present disclosure is not intended to be limited to the specific terminology so

selected, and it is to be understood that each specific element includes all technical equivalents which operate in a similar manner.

DESCRIPTION OF THE REFERENCE NUMERALS

121: Gate line,
171: Data line,
131: Storage electrode line,
133*a*, **133***b*, **133***c*, **133***d*, **133***e*, **133***f*: Storage electrode
190 (**190***a*, **190***b*, **190***c*): Pixel electrode,
140: Gate insulating layer
180: Protective layer,
A, B, C: Opening
3: Liquid crystal layer,
220: Black matrix
230 (R, G, B): Color filter,
270: Common electrode,
270 271, **272**, **273**: Cutout

The present invention now will be described more fully hereinafter with reference to the accompanying drawings, in which preferred embodiments of the invention are shown. This invention may, however, be embodied in many different forms and should not be construed as limited to the embodiments set forth herein. Like numerals refer to like elements throughout.

In the drawings, the thickness of layers and regions are exaggerated for clarity. Like numerals refer to like elements throughout. It will be understood that when an element such as a layer, region or substrate is referred to as being "on" another element, it can be directly on the other element or intervening elements may also be present. In contrast, when an element is referred to as being "directly on" another element, there are no intervening elements present.

Then, liquid crystal displays according to embodiments of the present invention will be described with reference to the drawings.

As described above, the color shift is generated since the variation in the transmittance of lights with different wavelengths is not uniform. Therefore, if the variation in the light transmittance is separately controlled for respective wavelengths, the desired color correction can be made to prohibit the color shift.

The light transmittance of an LCD depends upon the retardation $\Delta n \cdot d$ (where Δn indicates a birefringence and d indicates a cell gap), and the light wavelength λ. That is, the light transmittance varies depending upon the retardation and the degree of the variation depends upon the light wavelength. The dependency of the light transmittance upon the retardation and the light wavelength can be discriminated from the following equation:

$$I = I_0 \sin^2 2\theta \sin^2\left(\frac{\pi d \Delta n}{\lambda}\right) \quad (1)$$

In the LCD, the birefringence Δn in red, green and blue pixel regions is equal to each other since the pixel regions contain the same liquid crystal. Accordingly, only the cell gap can be used to separately control the light transmittance in the respective red, green and blue pixel regions. Therefore, the color shift problem due to the non-uniform variation in the transmittance of the red, the green and the blue lights can be compensated by determining the cell gap for respective pixel regions in a separate manner to individually control the light transmittance. The wavelength of the blue light is the shortest, that of the green light is the next, and that of the red light is the longest. In view of Equation 1, the cell gap, therefore, gradually increases from the blue region to the red region via the green region. That is, the cell gap is made as follows:

$$d_{blue} < d_{green} < d_{red} \quad (2)$$

Now, LCDs according to embodiments of the present invention are described in detail with reference to the drawings.

FIG. **1** is a layout view of a TFT array panel for an LCD according to a first embodiment of the present invention, and FIG. **2** is a layout view of a color filter array panel for an LCD according to a first embodiment of the present invention. FIG. **3** is a layout view showing arrangement of cutouts of a pixel electrode and a common electrode for an LCD according to a first embodiment of the present invention, and FIG. **4** is a sectional view of the LCD shown in FIG. **3** taken along the line IV-IV'.

A TFT array panel for an LCD according to a first embodiment of the present invention is described with reference to FIGS. **1** and **4**.

A plurality of gate lines **121** extending in a transverse direction and a plurality of storage electrode lines **131** extending parallel to the gate lines **121** are formed on an insulating substrate **110** preferably made of transparent glass. A plurality of gate electrodes **123** are protruded from the gate lines **121** and a gate pad **125** is provided at one end of each gate line **121**.

A plurality of sets of first to fourth storage electrodes **133***a*, **133***b*, **133***c* and **133***d* as well as a plurality of storage electrode connectors **133***e* and **133***f* are connected to each storage electrode line **131**. The first storage electrode **133***a* is directly connected to the storage electrode line **131** and extends in a longitudinal direction. The second storage electrode **133***b* and the third storage electrode **133***c* are connected to the first storage electrode **133***a* and extend in the transverse direction. The fourth storage electrode **133***d* is connected to the second and the third storage electrodes **133***b* and **133***c* and extends in the longitudinal direction. The storage electrode connectors **133***e* and **133***f* interconnect the fourth storage electrode **133***d* and the first storage electrode **133***a* in an adjacent pixel area.

The gate wire **121**, **123** and **125** and the storage electrode wire **131** and **133***a* to **133***f* are made of a conductive material such as Al, Al alloy, Cr, Cr alloy, Mo, Mo alloy, chromium nitride and molybdenum nitride and have a thickness of 1,000-3,500 Å.

The gate wire **121**, **123** and **125** and the storage electrode wire **131** and **133***a* to **133***f* may have a multiple-layered structure. In this case, it is preferable that at least one layer is made of a metal with low resistivity.

A gate insulating layer **140** is formed on the gate wire **121**, **123** and **125** and the storage electrode wire **131** and **133***a* to **133***f*. The gate insulating layer **140** is made of an insulating material such as silicon nitride or silicon oxide and has a thickness of 3,500-4,500 Å.

An amorphous silicon layer **151** and **153** is formed on the gate insulating layer **140** opposite the gate electrodes **123**. The amorphous silicon layer includes a plurality of data line portions **153** and a plurality of channel portions **151** and has a thickness of 800-1,500 Å.

An ohmic contact layer **161**, **163** and **165** preferably made of amorphous silicon heavily doped with n-type impurity such as phosphorous P is formed on the amorphous silicon layer **151** and **153**. The ohmic contact layer **161**, **163** and **165** bears a thickness of 500-800 Å.

A plurality of source and drain electrodes **173** and **175** are formed on the ohmic contact layer **163** and **165**. A plurality of data lines **171** extending in the longitudinal direction are formed on the data line portion **161** of the ohmic contact layer. The source electrode **173** is connected to the data line **171**. A plurality of data pads **179** are provided at one ends of the respective data lines **171**. The data wire **171**, **173**, **175** and **179** is made of a conductive material such as Al, Al alloy, Cr, Cr alloy, Mo, Mo alloy, chromium nitride and molybdenum nitride and has a thickness of 1,500-3,500 Å.

The data wire **171**, **173** and **175** may have a multiple-layered structure. In this case, it is preferable that at least one layer is made of a metal with low resistivity.

A protective layer **180** is formed on the data wire **171**, **173** and **175** and has a plurality of contact holes **181** exposing the drain electrodes **175**. The protective layer **180** is made of an insulating material such as silicon nitride or silicon oxide and has a thickness of 1,500-2,500 Å. Furthermore, the protective layer **180** may be made of an organic insulating layer, or a low dielectric CVD layer. The low dielectric CVD layer may be made of a-Si:C:O or a-Si:O:F, which is deposited by plasma enhanced chemical vapor deposition (PECVD).

The protective layer **180** and the gate insulating layer **140** have openings A, B and C with saw-toothed edges. The openings A, B and C are formed by removing portions of the protective layer **180** and the gate insulating layer **140** by etching.

A plurality of pixel electrodes **190** connected to the drain electrodes **175** through the contact holes **181** are formed on the protective layer **180**. The pixel electrodes **190** are made of a transparent conductive material such as indium tin oxide (ITO) or indium zinc oxide (IZO).

The pixel electrode **190** includes first to third partitions **190***a*, **190***b* and **190***c*, which are connected to each other via a plurality of connectors **190***d*, **190***e* and **190***f*. The first partition **190***a* is placed at an upper half part or a lower half part of a pixel area defined by intersections of two gate lines **121** and two data lines **171** and has a shape of a rectangle with four chamfered corners. The second and the third partitions **190***b* and **190***c* are placed at the other half part of the pixel area and have shapes of rectangles with chamfered corners. The second partition **190***b* is connected to the first partition **190***a* through the first and the second connectors **190***d* and **190***e*, and the third partition **190***c* is connected to the second partition **190***b* through the third connector **190***f*. The second storage electrode **133***b* is disposed between the first and the second partitions **190***a* and **190***b*, and the third storage electrode **133***c* is disposed between the second and the third partitions **190***b* and **190***c*. The first and the fourth storage electrodes **133***a* and **133***d* are disposed between the pixel electrode **190** and the data line **171**. Edges of the first partition **190***a* extending parallel to the data lines **171** are longer than its edges extending parallel to the gate lines **121**, while edges of the second and the third partitions **190***b* and **190***c* extending parallel to the data line **171** are shorter than their edges extending parallel to the gate line **121**. The second and the third partitions **190***b* and **190***c* overlap the first and the fourth storage electrodes **133***a* and **133***d*, while the first partition **190***a* does not overlap the first and the fourth storage electrodes **133***a* and **133***d*.

The partitions **190***a*, **190***b* and **190***c* of the pixel electrodes **190** in red and green pixel areas overlap the openings A, B and C provided in the protective layer **180** and the gate insulating layer **140** such that the partitions **190***a*, **190***b* and **190***c* contact the substrate **110** in the openings A, B and C. The openings A, B and C are not provided for the blue pixel area such that the pixel electrode **190** on the blue pixel area is placed on the protective layer **180**.

The neighboring pixel electrodes **190** across the data line **171** have reversed shapes along the longitudinal direction. That is, referring to the figures, the first partition **190***a* in the first pixel area is placed in the lower half part, while that in the second pixel area is placed in the upper half part. Consequently, the second and the third storage electrodes **133***b* and **133***c* in the two pixel areas across the data line **171** are reversed in their positions. However, the TFTs of the pixel areas in a row are connected to the same gate line **121**. Therefore, the drain electrode **175** of the TFT in the first pixel area is connected to the first partition **190***a*, while that in the second pixel area is connected to the third partition **190***c*.

Meanwhile, the electric potential applied to a common electrode in a color filter array panel is also applied to the storage electrode line **131**, the storage electrodes **133***a* to **133***d*, and the storage electrode connectors **133***e* and **133***f*.

As described above, a storage line or a storage electrode receiving the common electric potential and disposed between the data line and the pixel electrode or between the gate line and the pixel electrode prevents the potentials of the data line and the gate line from affecting the electric field of the pixel area, thereby forming stable domains.

In this way, the pixel electrodes **190** in the red and green pixel areas are formed directly on the insulating substrate **110**, while the pixel electrode **190** in the blue pixel area is formed on a lamination of the gate insulating layer **140** and the protective layer **180**. Therefore, the pixel electrodes **190** in the red and the green pixel areas and the pixel electrode **190** in the blue pixel area have height difference by the thickness of the protective layer **180** and the gate insulating layer **140**, i.e., by about 0.5-0.7 microns.

This structure makes a step of about 0.5-0.7 microns between the blue pixel area and the red and green pixel areas.

Meanwhile, the boundaries of the openings A, B and C have saw-toothed edges making angle of about 45 degrees with the gate lines **121** and the data lines **171**. These edges are parallel or perpendicular to the polarizing axes. This prevents the light leakage at the boundaries of the openings A, B and C.

A color filter array panel for an LCD according to the first embodiment will be now described with reference to FIGS. **2** to **4**.

A black matrix **220** preferably including double layers of Cr/CrOx is formed on a transparent glass substrate **210** and defines pixel areas. A plurality of red, green and blue color filters **230**R, **230**G and **230**B are formed in the respective pixel areas. An overcoat **250** covers and protects the color filters **230**R, **230**G and **230**B, and a common electrode **270** preferably made of a transparent conductive material is formed on the overcoat **250**. The common electrode **270** has a plurality of sets of first to third cutouts **271** to **273**. The first cutout **271** bisects the upper or lower half of the pixel area into two portions arranged in the transverse direction. The second and the third cutouts **272** and **273** trisect the other upper or lower half of the pixel area into three portions arranged in the longitudinal direction. Both ends of the each cutout **271** to **273** are gradually enlarged to form an isosceles triangle. The first to the third cutouts **271** to **273** in two pixel areas adjacent in the transverse direction are reversed in their positions in the longitudinal direction.

Meanwhile, the black matrix **220** may be made of an organic insulating material containing a black pigment, instead of the metal such as Cr.

After the TFT array panel shown in FIG. **1** and the color filter array panel shown in FIG. **2** are aligned and assembled,

a liquid crystal material **3** is injected between the panels such that the long axes of the liquid crystal molecules are aligned perpendicular to the substrates **110** and **210**. An LCD according to the first embodiment is then prepared by attaching two polarizing plates **12** and **22** to outer surfaces of the substrates **110** and **210** such that the polarizing axes thereof cross each other. The polarizing axes of the polarizing plates **12** and **22** make angle of about 45 degrees with respect to the gate lines **121** or the data lines **171**.

The substrates **110** and **210** are aligned such that the partitions **190***a* to **190***c* of the pixel electrode **190** overlap the first to the third cutouts **271** to **273** of the common electrode **270** to partition the pixel area into a plurality of subareas. Each subarea has two long edges and two short edges and is elongated parallel to the gate lines **121** or the data lines **171**.

Meanwhile, each partition **190***a* to **190***c* of the pixel electrode **190** has two long edges and two short edges. The long edges of each partition extend parallel to the data lines **171** or the gate lines **121** and make angle of about 45 degrees with the polarizing axes of the polarizing plates.

The storage electrode line **131** or the storage electrodes **133***a* to **133***d* are disposed between the data lines **171** or the gate lines **121** and the long edges of the partition adjacent thereto. Meanwhile, it is preferable that the storage electrode wire is not assigned near the short edges of the partition, or spaced apart therefrom by at least three microns. Otherwise, the storage electrode wire is preferably fully covered by the pixel electrode **190**. This is because the electric potential of the data lines **171** or the gate lines **121** close to the long edges of the partitions obstructs the domain formation. On the contrary, the electric potential of the data line **171** or the gate line **121** close to the short edges of the partition make a contribution to the domain formation.

As shown in FIG. **3**, the boundaries of the openings A, B and C in the protective layer **180** and the gate insulating layer **140** have saw-toothed edges parallel or perpendicular to the polarizing axes. This structure reduces the light leakage at the boundaries of the openings A, B and C and this will be described in detail.

The liquid crystal molecules near the steps formed at the boundaries of the openings A, B and C are out of order. That is, the long axes of the liquid crystal molecules are not aligned perpendicular to the substrates **110** and **210** but inclined thereto even in the absence of the electric field and this may change the polarization of light to result in the light leakage. However, if the tilt directions of the liquid crystal molecule are parallel or perpendicular to the polarizing axes, the light polarization is not affected by the orientations of the liquid crystal molecules. Meanwhile, the steps near the boundaries of the openings A, B and C tilt the liquid crystal molecules positioned close thereto to be perpendicular to the boundaries. Consequently, the long axes of the liquid crystal molecules become parallel or perpendicular to the polarizing axes. In other words, although the liquid crystal molecules positioned close to the boundaries of the openings A, B and C are oriented oblique to the substrates due to the stepped difference, the polarization of the light is not affected since the tilt directions are parallel or perpendicular to the polarizing axes. Therefore, the increase in the light leakage due to the openings A, B and C can be prevented.

A second embodiment of the present invention is described now.

FIG. **5** is a sectional view of an exemplary LCD according to a second embodiment of the present invention taken along the line IV-IV' in FIG. **3**. Green color filters G of the LCD have thickness larger than red color filters R and blue color filters B. This enable to satisfy a color correction condition expressed in Equation 2.

For instance, the thickness of the green color filter G is larger than that of the other two color filters R and B by about 0.1-0.2 microns. The step between the green color filter G and the red and the blue color filters R and B has about 0.1 to 0.2 microns.

The assembly of the color filter array panel and the TFT array panel according to the first embodiment with a gap therebetween provides different cell gaps for the respective pixel areas.

The B pixel area in the assembly protrudes toward the liquid crystal layer by about 0.5-0.7 microns compared with the R and G pixel areas, and the green color filter G corresponding to the C pixel area protrudes toward the liquid crystal layer by about 0.1-0.2 microns compared with the red and blue color filters R and B corresponding to the R and B pixel areas.

Therefore, the cell gaps of the respective pixel areas satisfy Equation 2.

As described above, the present invention provides individual cell gaps for the respective pixel areas to form multi cell gaps. The multi cell gaps enable to control the light transmittance of the respective pixel areas, thereby realizing the desired color correction.

Furthermore, the saw-toothed shapes or the zigzag shapes of the boundaries of the openings A, B and C reduce the light leakage near the boundaries.

It is preferable that a plurality of spacers, particularly in pillar shapes, are provided between the TFT array panel and the color filter array panel to maintain the uniform distance therebetween. The spacers are preferably positioned at the areas covered by the black matrix **110**.

A method of fabricating the TFT array panel will be now described with reference to FIGS. **6**A to **6**E as well as FIG. **1**.

FIGS. **6**A to **6**E are sectional views of the TFT array panel shown in FIG. **1** according to the first and the second embodiments taking along the lines VI-VI', VI'-VI" and VI"-VI'", which sequentially illustrate the intermediate steps of fabricating the TFT array panel.

As shown in FIG. **6**A, a gate metal layer is deposited on an insulating substrate **110** and patterned by photo etching to form a gate wire. The gate wire includes a plurality of gate lines **121**, a plurality of gate electrodes **123**, and a plurality of gate pads **125**.

Thereafter, as shown in FIG. **6**B, a gate insulating layer **140** made of an insulating material such as silicon nitride is deposited on the insulating substrate **110** such that it covers the gate wire **121**, **123** and **125**.

An amorphous silicon layer and a conductive-impurity-doped amorphous silicon layer are sequentially deposited on the gate insulating layer **140**, and patterned by photo etching to form an amorphous silicon layer **151** and **153** and an ohmic contact layer **160** and **161**.

As shown in FIG. **6**C, a data metal layer is deposited on the entire surface of the substrate, and patterned by photo etching to form a data wire. The data wire includes a plurality of data lines **171**, a plurality of source electrodes **173**, and a plurality of drain electrodes **175**. The data lines **171** intersect the gate lines **121** to define a plurality of pixel areas including R pixel areas, G pixel areas, and B pixel areas.

The ohmic contact layer **161** and **160** is etched using the source and the drain electrodes **173** and **175** as a mask such that it is divided into portions **163** contacting the source electrodes **173** and portions **165** contacting the drain electrodes **175**.

As shown in FIG. **6**D, a protective layer **180** preferably made of silicon nitride or silicon oxide is formed on the entire surface of the substrate provided with the data wire **171**, **173**, **175** and **179** and the semiconductor pattern **151** and **153**.

The protective layer **180** and the gate insulating layer **140** are patterned by photo etching to form a plurality of contact holes **181**, **182** and **183** respectively exposing the drain electrodes **175**, the gate pads **125** and the data pads **179**, and a plurality of openings A, B and C exposing the insulating substrate **110** in the R and G pixel areas.

As shown in FIG. **6**E, a transparent conductive layer made of ITO or IZO is deposited on the entire surface of the substrate, and patterned by photo etching to form a plurality of pixel electrodes **190** in the respective pixel areas. The pixel electrodes **190** are connected to the drain electrodes **175** through the contact holes **181**. In this process, a plurality of subsidiary gate pads **95** and a plurality of subsidiary data pads **97** are formed together with the pixel electrodes **190** such that they cover the gate pads **125** and the data pads **179**, respectively.

The color filter array panel of the LCD according to the first embodiment is fabricated by the usual process.

However, the second embodiment forms green color filters G to be thicker than red and blue color filters R and B.

That is, a black matrix **220** is formed on a top substrate **210**, and a plurality of red, green and blue color filters R, G and B are sequentially formed thereon as shown in FIG. **5**. The color filters may be formed by sequentially repeating the steps of coating one of red, green and blue color resins on the substrate and performing selective light exposure and development. The green color resin coated on the substrate preferably has a relatively large thickness such that the green color filter G is thicker than the R and B color filters. An overcoat **250** is formed on the substrate to cover the entire surface of the substrate, and a common electrode **270** is formed thereon.

FIG. **7** is a layout view of a LCD according to a third embodiment of the present invention, and FIG. **8** is a sectional view of the LCD shown in FIG. **7** taken along the line VIII-VIII'.

The LCD has a bottom substrate **110**, a top substrate **210** facing the bottom substrate **110**, and a liquid crystal layer **3** interposed between the bottom substrate **110** and the top substrate **210** such that liquid crystal molecules in the liquid crystal layer are aligned perpendicular to the substrates **210** and **220**. The bottom and the top substrate **110** and **210** are made of an insulating material such as transparent glass.

A plurality of pixel electrodes **190** are formed on the bottom substrate **110**. The pixel electrodes **190** is made of a transparent conductive material such as indium tin oxide (ITO) and indium zinc oxide (IZO) and have a plurality of apertures **191**, **192** and **193**. Each pixel electrode **190** is connected to a TFT to receive image signal voltages. The TFT is connected to a gate line **121** for carrying scanning signals and a data line **171** for carrying image signals to switch on/off the pixel electrode **190** responsive to the scanning signals. Furthermore, a bottom polarizing plate **12** is attached to outer surface of the bottom substrate **110**. The pixel electrodes **190** of a reflective type LCD may not be made of a transparent material and the reflective type LCD does not require the bottom polarizing plate **12**.

A black matrix **220** for preventing light leakage, a plurality of red, green and blue color filters **230** and a common electrode made of transparent material such ITO and IZO are formed on the top substrate **210**. The common electrode **270** is provided with a plurality of sets of cutouts **271** to **273**. The black matrix **220** may located on the cutouts **271** to **273** as well as the periphery of pixel areas for preventing light leakage due to the cutouts **271** to **273**.

The LCD according to the third embodiment will be now described in more detail.

A plurality of gate lines **121** extending in a transverse direction are formed on the bottom insulating substrate **110**. A plurality of gate electrodes **123** protrudes from the gate lines **121**. A plurality of storage electrode lines **131** extending parallel to the gate lines **121** are formed on the insulating substrate **110**. Each storage electrode line **131** is connected to a plurality of pairs of storage electrodes **133***a* and **133***b* extending in a longitudinal direction and connected to each other through a storage electrode **133***c* extending in the transverse direction. At least one additional storage electrode lines **131** may be provided. The gate lines **121**, the gate electrodes **123**, the storage electrode lines **131** and the storage electrodes **133***a* to **133***c* are made of a metal such as Al and Cr, and have a single-layered structure or a double-layered structure including sequentially-deposited Cr and Al layers. The gate wire and the storage wire may be made of various metals.

A gate insulating layer **140** preferably made of silicon nitride is formed on the gate lines **121**, the storage electrode lines **131** and the storage electrodes **133***a* to **133***c*.

A plurality of data lines **171** extending in the longitudinal direction are formed on the gate insulating layer **140**. A plurality of source electrodes **173** branched from each data line **171** and a plurality of drain electrodes **175** positioned close to the source electrodes **173** are formed. A plurality of bridge metal pieces **172** overlapping the gate lines **121** are formed on the gate insulating layer **140**. Like the gate wire, the data lines **171**, the source electrodes **173** and the drain electrodes **175** are preferably made of Cr or Al, and may also have a single-layered structure or a double-layered structure.

A plurality of channel portions **151** of an amorphous silicon layer used as channels of TFTs are formed under the source and the drain electrodes **173** and **175**. A plurality of data portions **153** of the amorphous silicon layer are formed under the data line **171** such that they interconnect the channel portions **151** of the amorphous silicon layer in the longitudinal direction. A plurality of ohmic contacts (not shown) are formed on the channel portions **151** of the amorphous silicon layer for reducing the contact resistance between the source and drain electrodes **173** and **175** and the channel portions **151** of the amorphous silicon layer. The ohmic contacts are made of amorphous silicon heavily doped with n-type impurity.

A protective layer **180** preferably made of an inorganic insulating material such as silicon nitride or an organic material such as resin is formed on the data lines **171**. The protective layer **180** is provided with a plurality of contact holes **181** exposing the drain electrodes **175**.

The protective layer **180** and the gate insulating layer **140** are provided with a plurality of openings A, B and C having saw-toothed edges. The openings A, B and C are formed by removing the protective layer **180** and the gate insulating layer **140** by etching.

A plurality of pixel electrodes **190** having a plurality of apertures **191**-**193** are formed on the protective layer **180**. The pixel electrodes **190** are made of a transparent conductive material such as ITO and IZO, or an opaque conductive material exhibiting excellent light reflectance such as Al. The apertures **191** to **193** of the pixel electrodes **190** include a transverse aperture **192** extending in the transverse direction and bisecting the pixel electrode **190** into two portions arranged in the longitudinal direction and a plurality of oblique apertures **191** and **193** located in upper and lower halves of the pixel electrode **190** and extending obliquely. The

apertures **191** and **193** placed in the upper and lower halves of the pixel electrode **190** are perpendicular to each other. This is to uniformly distribute the fringe fields in four directions.

The pixel electrodes **190** in the red and the green pixel areas overlap the openings A, B and C of the protective layer **180** and the gate insulating layer **140** such that they contact the substrate **110** in the openings A, B and C. The openings A, B and C are not provided in the blue pixel area such that the pixel electrode **190** in the blue pixel area is placed on the protective layer **180**.

The apertures **191** to **193** of the two pixel electrodes **190** opposite each other with respect to the data line **171** have an inversion symmetry.

A plurality of storage connection bridges **91** are also formed on the protective layer **180** such that they interconnects the storage electrodes **133***a* and the storage electrode lines **131** across the gate line **121**. The storage connection bridge **91** contacts the storage electrode **133***a* and the storage electrode line **131** through the contact holes **183** and **184** formed in the protective layer **180** and the gate insulating layer **140**. The storage connection bridge **91** overlaps the bridge piece **172**. The storage connection bridge **91** electrically interconnects the storage wire components on the bottom substrate **110**. If needed, the storage wire may be used to repair the defects of the gate lines **121** or the data lines **171**. The bridge pieces **172** are provided for assisting the electrical connection between the gate lines **121** and the storage connection bridges **91** formed by laser shorting for the repair.

A black matrix **220** for preventing light leakage is formed on the top insulating substrate **210**. A plurality of red, green and blue color filters **230** are formed on the black matrix **220**. A common electrode **270** having a plurality of cutouts **271**, **272** and **273** is formed on the color filters **230**. The common electrode **270** is made of a transparent conductive material such as ITO and IZO.

The oblique apertures **191** and **193** of the pixel electrode **190** are interposed between the cutouts **271** to **273** of the common electrode **270**, which include oblique portions extending parallel to the oblique apertures **191** and **193**, and bent portions overlapping the edges of the pixel electrode **190**. The bent portions are classified into transverse bent portions and longitudinal bent portions.

The cutouts **271** to **273** of the common electrode **270** in the two pixel areas opposite each other with respect to the data line **171** have inversion symmetry.

The LCD according to this embodiment is prepared by aligning and assembling the TFT array panel and the color filter array panel and injecting a liquid crystal material into a gap between the two panels such that the liquid crystal material is subject to vertical alignment. The apertures **191** to **193** of the pixel electrode **190** and the cutouts **271** to **273** of the common electrode **270** in the assembly of the TFT array panel and the color filter array panel aligned with each other partition a pixel area into a plurality of domains. The domains are classified into four classes depending upon the average long axial directions of the liquid crystal molecules.

According to the above-described embodiments, the gate insulating layer **140** and the protective layer **180** are left in the B pixel area, while they are removed in the R and G pixel areas. However, upper part of the gate insulating layer **140** in the pixel areas may be removed such that lower part of the gate insulating layer **140** and the protective layer **180** are left in the B pixel area, and the gate insulating layer **140** and the protective layer **180** are all removed at the R and G pixel areas. Furthermore, the gate insulating layer **140** in the B pixel area may be all removed while leaving out the protective layer **180**.

In order to obtain such a structure, the etching time for etching the amorphous silicon layer **151** and **153** and the ohmic contact layer **161**, **163** and **165** is increased to over-etch upper part of the underlying gate insulating layer **140** or all of the gate insulating layer **140**. The remaining process steps are performed as in the first and the second embodiments.

The arrangement of the cutouts of the pixel electrodes and the common electrode may be modified in various manners. Protrusions may be provided instead of the cutouts.

As described above, the inventive LCD differentiates the cell gaps for the respective pixel areas to separately control the light transmittance in the respective pixel areas, thereby realizing the desired color correction. Furthermore, the boundaries of the openings for controlling the cell gap have zigzag shapes, which prevent light leakage near the boundaries.

Although preferred embodiments of the present invention have been described in detail hereinabove, it should be clearly understood that many variations and/or modifications of the basic inventive concepts herein taught which may appear to those skilled in the present art will still fall within the spirit and scope of the present invention, as defined in the appended claims.

What is claimed is:

1. A liquid crystal display comprising:

a first insulating substrate;

a plurality of gate lines formed on the first insulting substrate;

a gate insulating layer covering the gate line;

a plurality of data lines formed on the gate insulating layer and intersecting the gate lines to define first to third pixel areas;

a plurality of thin film transistors electrically connected to the gate lines and the data lines;

a protective layer covering the thin film transistors and the data lines and having a plurality of contact holes exposing a plurality of drain electrodes of the thin film transistors;

a plurality of pixel electrodes connected to the drain electrodes through the contact holes;

a second insulating substrate facing the first insulating substrate;

a black matrix having a plurality of openings formed on the second insulating substrate;

red, green, and blue color filters each arranged within an opening of the black matrix and arranged on the second insulating substrate, wherein the red, green, and blue color filters face the first to third pixel areas; and

a common electrode covering the red, green, and blue color filters and having a plurality of cutouts disposed on the red, green, and blue color filters,

wherein the protective layer and the gate insulating layer have openings in the first and the second pixel areas,

wherein the protective layer and the gate insulating layer do not have openings in the third pixel area,

wherein the openings of the protective layer and gate insulation layer overlap the pixel electrodes, and

wherein the green color filter that is arranged within an opening of the black matrix is thicker than both the red color filter arranged within an opening of the black matrix and the blue color filter arranged within an opening of the black matrix.

2. The liquid crystal display of claim **1**, wherein a portion of the gate insulating layer overlapping a semiconductor pattern is thicker than other portions of the gate insulating layer.

3. The liquid crystal display of claim **1**, wherein each of the plurality of pixel electrodes includes a plurality of partitions, and each of the openings of the gate insulating layer includes a plurality of sub-portions overlapping the partitions of the pixel electrodes.

4. The liquid crystal display of claim **1**, wherein a cell gap D**1** in the first pixel area, a cell gap D**2** in the second pixel area, and a cell gap D**3** in the third pixel area satisfy the relation: D**1**>D**2**>D**3**.

5. The liquid crystal display of claim **1**, further comprising an overcoat formed between the common electrode and the color filters.

6. The liquid crystal display of claim **1**, wherein the openings of the protective layer each have zigzag-shaped boundaries.

7. The liquid crystal display of claim **6**, wherein the boundaries of the openings of the protective layer each form an angle of about 45 degrees or about 135 degrees with respect to the gate lines.

8. The liquid crystal display of claim **6**, wherein the boundaries of the openings of the protective layer each form an angle of about 90 degrees with respect to the gate lines.

9. A method of manufacturing a liquid crystal display, comprising:

forming a gate wire including a gate line and gate electrodes on a first insulating substrate;

forming a semiconductor pattern on a gate insulating layer;

forming a data wire including a data line defining a first, second, and third pixel area by crossing the gate line, and defining source electrodes and drain electrodes connected to the semiconductor pattern;

forming a passivation layer covering the semiconductor pattern and the data wires;

forming contact holes exposing the drain electrodes and openings in the first and second pixel areas of the gate insulating layer and the passivation layer;

forming pixel electrodes connected to the drain electrodes through the contact holes;

forming a black matrix having a plurality of openings on a second insulation substrate;

forming red, green, and blue color filters each within an opening of the black matrix and arranged on the second insulating substrate, wherein the red, green, and blue color filters face the first to the third pixel areas;

forming a common electrode on the red, green, and blue color filters, wherein the common electrode has a plurality of cutouts disposed on the red, green, and blue color filters; and

assembling the first substrate and the second substrate,

wherein the passivation layer and the gate insulating layer each have openings over the first and second pixel areas,

wherein the passivation layer and the gate insulating layer do not have openings over the third pixel area,

wherein the openings of the passivation layer and the gate insulating layer overlap the pixel electrodes, and

wherein the green color filter that is arranged within an opening of the black matrix is thicker than both the red color filter arranged within an opening of the black matrix and the blue color filter arranged within an opening of the black matrix.

10. The liquid crystal display of claim **1**, wherein the red color filter arranged within the opening of the black matrix is substantially equal in thickness to the blue color filter arranged within the opening of the black matrix.

11. The method of claim **9**, wherein the red color filter arranged within the opening of the black matrix is substantially equal in thickness to the blue color filter arranged within the opening of the black matrix.

* * * * *

专利名称(译)	在保护层和栅极绝缘层中具有开口的液晶显示器和制造显示器的方法		
公开(公告)号	US8054428	公开(公告)日	2011-11-08
申请号	US12/329356	申请日	2008-12-05
[标]申请(专利权)人(译)	SONG JANG KUN 金相GAB 李承HEE		
申请(专利权)人(译)	SONG JANG-KUN 金相GAB 李承HEE		
当前申请(专利权)人(译)	SAMSUNG ELECTRONICS CO. , LTD.		
[标]发明人	SONG JANG KUN KIM SANG GAB LEE SEUNG HEE		
发明人	SONG, JANG-KUN KIM, SANG-GAB LEE, SEUNG-HEE		
IPC分类号	G02F1/1337 G02F1/136 G02B5/20 G02F1/1333 G02F1/1335 G02F1/1343 G02F1/1362 G02F1/1368 G09F9/30		
CPC分类号	G02F1/133371 G02F1/133514 G02F1/136227		
审查员(译)	内尔姆斯 , DAVID		
优先权	1020020002229 2002-01-15 KR 1020020025537 2002-05-09 KR PCT/KR2002/001390 2002-07-24 WO		
其他公开文献	US20090185116A1		
外部链接	Espacenet USPTO		

摘要(译)
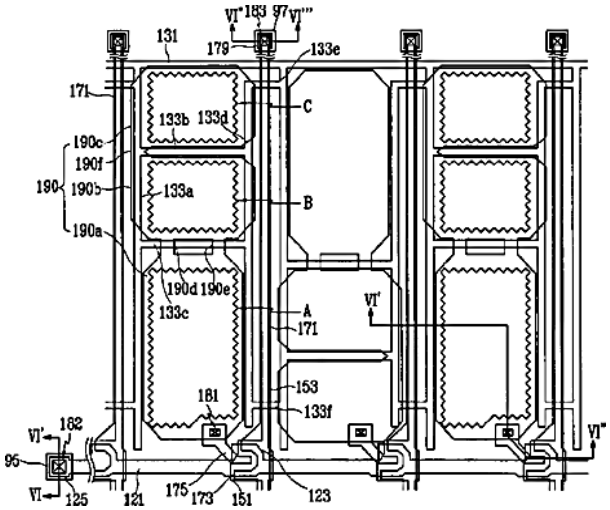
液晶显示器及其制造方法技术领域本发明涉及液晶显示器及其制造方法。红色，绿色和蓝色像素区域的单元间隙以单独的方式形成，用于校正色移以提高图像质量。用于控制单元间隙的开口设置在保护层和栅极绝缘层中并且具有Z字形边界。以这种方式，可以防止开口边界附近的漏光。